Vehicle Turning Movement Survey
With Classification

Major Route: 3rd Avenue
Minor Route: Redford Street
Municipality: Port Alberni
Filename: 1-3rd Ave @ Redford St-Sep 28, 2017.xlsx
Location #: 1

Date: September 28, 2017
Day-of-week: Thursday

East/West Route: 3rd Avenue
Intersection Type: 4-leg
Signalized?: Yes
Weather: Clear and dry

Vehicle Classifications: Regular Vehicles
Buses
Articulated Trucks
Cube Trucks
Dump Trucks
Emergency Trucks
Garbage Trucks
Logging Trucks
RVs
Utility Trucks

This data is for Regular Vehicles

Shift	Start	End	Duration
AM	7:00	12:00	5.00
MD	12:00	15:00	3.00
PM			
Total	**7:00**		**8.00**

Notes: 24-hour clock used for reporting (15-minute increments)
North Approach - southbound vehicles approaching intersection from the north
15x4 - 15 min volume (from maximum 15 minute period of movement/approach in peak hour period [*]) x 4
Pedestrians - N indicates pedestrians crossing north approach (east/west)

Comments:

Survey Data
Regular Vehicles

3rd Avenue @ Redford Street
Thursday, September 28, 2017

Time Period Begins	Redford St NORTH Approach				Redford St SOUTH Approach				3rd Ave WEST Approach				3rd Ave EAST Approach				Total Volume		Peak	Crosswalks			
	Left	Thru	Right	Total	Left	Thru	Right	Total	Left	Thru	Right	Total	Left	Thru	Right	Total	15-min	Hour		N	S	W	E
7:00	7	29	0	**36**	0	27	9	**36**	0	0	0	**0**	10	1	26	**37**	**109**			0	0	0	2
7:15	11	36	1	**48**	1	27	9	**37**	0	0	1	**1**	17	0	19	**36**	**122**			1	0	1	0
7:30	11	46	0	**57**	0	44	17	**61**	0	0	0	**0**	25	0	49	**74**	**192**			0	0	0	4
7:45	21	108	0	**129**	0	51	15	**66**	0	0	0	**0**	20	1	31	**52**	**247**	670		0	0	1	0
8:00	20	65	0	**85**	1	44	21	**66**	0	0	1	**1**	21	0	27	**48**	**200**	761		0	2	0	3
8:15	17	76	0	**93**	0	57	28	**85**	0	1	0	**1**	23	1	34	**58**	**237**	876		0	0	0	2
8:30	26	82	0	**108**	1	65	25	**91**	0	0	1	**1**	26	0	42	**68**	**268**	952		0	0	0	0
8:45	23	122	0	**145**	0	73	16	**89**	0	0	0	**0**	40	0	41	**81**	**315**	1020		0	0	0	2
9:00	17	80	0	**97**	0	78	22	**100**	0	2	1	**3**	35	1	27	**63**	**263**	1083		0	0	1	2
9:15	19	76	1	**96**	1	56	23	**80**	1	1	1	**3**	14	0	19	**33**	**212**	1058		0	0	0	0
9:30	18	78	0	**96**	1	79	18	**98**	0	1	0	**1**	36	0	35	**71**	**266**	1056		0	0	0	1
9:45	11	101	1	**113**	0	78	28	**106**	1	0	0	**1**	28	1	36	**65**	**285**	1026		0	0	0	2
10:00	15	72	0	**87**	0	81	31	**112**	0	0	0	**0**	26	1	20	**47**	**246**	1009		1	2	3	7
10:15	18	82	0	**100**	0	95	38	**133**	1	1	0	**2**	28	0	23	**51**	**286**	1083		0	1	1	1
10:30	15	106	0	**121**	0	104	23	**127**	1	0	0	**1**	36	1	44	**81**	**330**	1147		0	0	0	3
10:45	19	117	0	**136**	0	90	34	**124**	0	0	0	**0**	22	0	29	**51**	**311**	1173		0	1	0	3
11:00	19	80	0	**99**	0	95	40	**135**	0	0	0	**0**	33	1	39	**73**	**307**	1234	*	0	0	0	2
11:15	24	84	0	**108**	0	116	46	**162**	1	0	0	**1**	32	0	30	**62**	**333**	1281	*	0	0	0	1
11:30	15	105	0	**120**	1	102	37	**140**	1	1	2	**4**	24	2	33	**59**	**323**	1274	*	0	0	0	1
11:45	14	111	1	**126**	0	96	35	**131**	0	0	1	**1**	36	0	43	**79**	**337**	1300	+	0	0	0	2
Total	340	1656	4	**2000**	6	1458	515	**1979**	6	7	8	**21**	532	10	647	**1189**	**5189**			2	6	7	38
12:00	33	118	3	**154**	3	121	38	**162**	0	0	1	**1**	45	0	34	**79**	**396**			0	1	0	1
12:15	24	122	1	**147**	1	125	28	**154**	0	1	0	**1**	30	0	41	**71**	**373**			0	0	0	1
12:30	22	101	1	**124**	1	91	42	**134**	1	0	1	**2**	33	1	47	**81**	**341**			0	1	0	3
12:45	24	141	0	**165**	1	118	39	**158**	0	1	0	**1**	29	1	36	**66**	**390**	1500		0	0	0	1
13:00	25	135	0	**160**	0	93	22	**115**	0	1	1	**2**	22	0	35	**57**	**334**	1438		0	0	0	0
13:15	20	114	1	**135**	0	99	31	**130**	0	0	1	**1**	29	0	37	**66**	**332**	1397		0	4	1	0
13:30	19	111	0	**130**	2	131	30	**163**	1	0	0	**1**	26	0	38	**64**	**358**	1414		0	0	1	0
13:45	22	98	1	**121**	2	107	41	**150**	2	0	0	**2**	33	0	48	**81**	**354**	1378		0	0	0	0
14:00	19	116	1	**136**	1	141	34	**176**	0	2	1	**3**	32	0	31	**63**	**378**	1422	*	0	2	0	3
14:15	29	102	0	**131**	1	128	29	**158**	0	0	1	**1**	29	0	54	**83**	**373**	1463	*	0	0	0	0
14:30	27	140	0	**167**	0	114	30	**144**	2	0	1	**3**	32	0	30	**62**	**376**	1481	*	0	1	1	2
14:45	32	126	1	**159**	0	116	35	**151**	0	1	2	**3**	28	1	48	**77**	**390**	1517	+	0	0	2	0
n/a																							
n/a																							
n/a																							
n/a																							
Total	296	1424	9	**1729**	12	1384	399	**1795**	6	6	9	**21**	368	3	479	**850**	**4395**			0	9	5	11
n/a																							
n/a																							
n/a																							
n/a																							
n/a																							
n/a																							
n/a																							
n/a																							
n/a																							
n/a																							
n/a																							
n/a																							
n/a																							
n/a																							
n/a																							
n/a																							
n/a																							
n/a																							
Total																							

AM Peak Period
Regular Vehicles

3rd Avenue @ Redford Street
Thursday, September 28, 2017

Time Period Begins	Redford St NORTH Approach				Redford St SOUTH Approach				3rd Ave WEST Approach				3rd Ave EAST Approach				Total Volume		Peak	Crosswalks				Conflict	
	Left	Thru	Right	Total	Left	Thru	Right	Total	Left	Thru	Right	Total	Left	Thru	Right	Total	15-min	Hour		N	S	W	E	15 min	Hr
7:00	7	29	0	36	0	27	9	36	0	0	0	0	10	1	26	37	109			0	0	0	2	70	
7:15	11	36	1	48	1	27	9	37	0	0	1	1	17	0	19	36	122			1	0	1	0	66	
7:30	11	46	0	57	0	44	17	61	0	0	0	0	25	0	49	74	192			0	0	0	4	121	
7:45	21	108	0	129	0	51	15	66	0	0	0	0	20	1	31	52	247	670		0	0	1	0	140	397
8:00	20	65	0	85	1	44	21	66	0	0	1	1	21	0	27	48	200	761		0	2	0	3	112	439
8:15	17	76	0	93	0	57	28	85	0	1	0	1	23	1	34	58	237	876		0	0	0	2	137	510
8:30	26	82	0	108	1	65	25	91	0	0	1	1	26	0	42	68	268	952		0	0	0	0	158	547
8:45	23	122	0	145	0	73	16	89	0	0	0	0	40	0	41	81	315	1020		0	0	0	2	163	570
9:00	17	80	0	97	0	78	22	100	0	2	1	3	35	1	27	63	263	1083		0	0	1	2	155	613
9:15	19	76	1	96	1	56	23	80	1	1	1	3	14	0	19	33	212	1058		0	0	0	0	118	594
9:30	18	78	0	96	1	79	18	98	0	1	0	1	36	0	35	71	266	1056		0	0	0	1	152	588
9:45	11	101	1	113	0	78	28	106	1	0	0	1	28	1	36	65	285	1026		0	0	0	2	155	580
10:00	15	72	0	87	0	81	31	112	0	0	0	0	26	1	20	47	246	1009		1	2	3	7	153	578
10:15	18	82	0	100	0	95	38	133	1	1	0	2	28	0	23	51	286	1083		0	1	1	1	180	640
10:30	15	106	0	121	0	104	23	127	1	0	0	1	36	1	44	81	330	1147		0	0	0	3	188	676
10:45	19	117	0	136	0	90	34	124	0	0	0	0	22	0	29	51	311	1173		0	1	0	3	172	693
11:00	19	80	0	99	0	95	40	135	0	0	0	0	33	1	39	73	307	1234	*	0	0	0	2	194	734
11:15	24	84	0	108	0	116	46	162	1	0	0	1	32	0	30	62	333	1281	*	0	0	0	1	218	772
11:30	15	105	0	120	1	102	37	140	1	1	2	4	24	2	33	59	323	1274	*	0	0	0	1	190	774
11:45	14	111	1	126	0	96	35	131	0	0	1	1	36	0	43	79	337	1300	+	0	0	0	2	188	790
Total	340	1656	4	**2000**	6	1458	515	**1979**	6	7	8	**21**	532	10	647	**1189**	5189			2	6	7	38		2976
Avg Hr	68	331	1	**400**	1	292	103	**396**	1	1	2	**4**	106	2	129	**238**	1038			0	1	1	8		

Peak hour of the intersection

Pk Hr	72	380	1	453	1	409	158	568	2	1	3	6	125	3	145	273	1300	*		0	0	0	6		789
15x4	96	444	4	504	4	464	184	648	4	4	8	16	144	8	172	316	1348	+		0	0	0	8		928
PHF	0.75	0.86	0.25	**0.90**	0.25	0.88	0.86	**0.88**	0.50	0.25	0.38	**0.38**	0.87	0.38	0.84	**0.86**	0.96			n/a	n/a	n/a	0.75		0.85

Peak hour of conflicting volumes for the intersection

Pk Hr	72	380	1	453	1	409	158	568	2	1	3	6	125	3	145	273	1300	*		0	0	0	6		789
15x4	96	444	4	504	4	464	184	648	4	4	8	16	144	8	172	316	1348	+		0	0	0	8		928
PHF	0.75	0.86	0.25	**0.90**	0.25	0.88	0.86	**0.88**	0.50	0.25	0.38	**0.38**	0.87	0.38	0.84	**0.86**	0.96			n/a	n/a	n/a	0.75		0.85

** Calculated peak hour occurs during the first or last hour of shift and therefore may be invalid. **

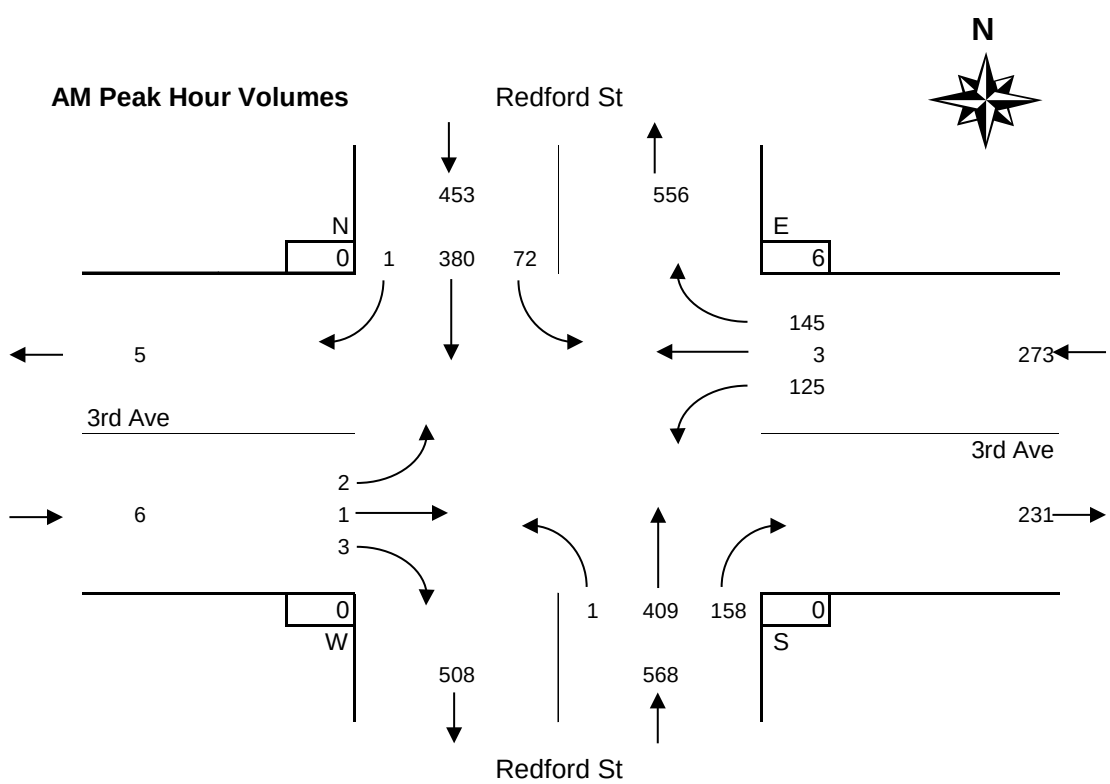

MD Peak Period
Regular Vehicles

3rd Avenue @ Redford Street
Thursday, September 28, 2017

Time Period Begins	Redford St NORTH Approach				Redford St SOUTH Approach				3rd Ave WEST Approach				3rd Ave EAST Approach				Total Volume		Peak	Crosswalks				Conflict	
	Left	Thru	Right	Total	Left	Thru	Right	Total	Left	Thru	Right	Total	Left	Thru	Right	Total	15-min	Hour		N	S	W	E	15 min	Hr
12:00	33	118	3	154	3	121	38	162	0	0	1	1	45	0	34	79	396			0	1	0	1	238	
12:15	24	122	1	147	1	125	28	154	0	1	0	1	30	0	41	71	373			0	0	0	1	218	
12:30	22	101	1	124	1	91	42	134	1	0	1	2	33	1	47	81	341			0	1	0	3	204	
12:45	24	141	0	165	1	118	39	158	0	1	0	1	29	1	36	66	390	1500		0	0	0	1	218	878
13:00	25	135	0	160	0	93	22	115	0	1	1	2	22	0	35	57	334	1438		0	0	0	0	175	815
13:15	20	114	1	135	0	99	31	130	0	0	1	1	29	0	37	66	332	1397		0	4	1	0	187	784
13:30	19	111	0	130	2	131	30	163	1	0	0	1	26	0	38	64	358	1414		0	0	1	0	219	799
13:45	22	98	1	121	2	107	41	150	2	0	0	2	33	0	48	81	354	1378		0	0	0	0	220	801
14:00	19	116	1	136	1	141	34	176	0	2	1	3	32	0	31	63	378	1422	*	0	2	0	3	229	855
14:15	29	102	0	131	1	128	29	158	0	0	1	1	29	0	54	83	373	1463	*	0	0	0	0	240	908
14:30	27	140	0	167	0	114	30	144	2	0	1	3	32	0	30	62	376	1481	*	0	1	1	2	204	893
14:45	32	126	1	159	0	116	35	151	0	1	2	3	28	1	48	77	390	1517	+	0	0	2	0	232	905
n/a																									
n/a																									
n/a																									
n/a																									
Total	296	1424	9	**1729**	12	1384	399	**1795**	6	6	9	**21**	368	3	479	**850**	4395			0	9	5	11		2567
Avg Hr	99	475	3	**576**	4	461	133	**598**	2	2	3	**7**	123	1	160	**283**	1465			0	3	2	4		

Peak hour of the intersection

Pk Hr	107	484	2	593	2	499	128	629	2	3	5	10	121	1	163	285	1517	*		0	3	3	5		900
15x4	128	560	4	668	4	564	140	704	8	8	8	12	128	4	216	332	1560	+		0	8	8	12		1060
PHF	0.84	0.86	0.50	**0.89**	0.50	0.88	0.91	**0.89**	0.25	0.38	0.63	**0.83**	0.95	0.25	0.75	**0.86**	0.97			n/a	0.38	0.38	0.42		0.85

Peak hour of conflicting volumes for the intersection

Pk Hr	89	427	2	518	6	507	134	647	3	2	2	7	120	0	171	291	1463	*		0	2	1	3		904
15x4	116	464	4	544	8	564	164	704	8	8	4	12	132	0	216	332	1512	+		0	8	4	12		1068
PHF	0.77	0.92	0.50	**0.95**	0.75	0.90	0.82	**0.92**	0.38	0.25	0.50	**0.58**	0.91	n/a	0.79	**0.88**	0.97			n/a	0.25	0.25	0.25		0.85

** Calculated peak hour occurs during the first or last hour of shift and therefore may be invalid. **

MD Peak Hour Volumes

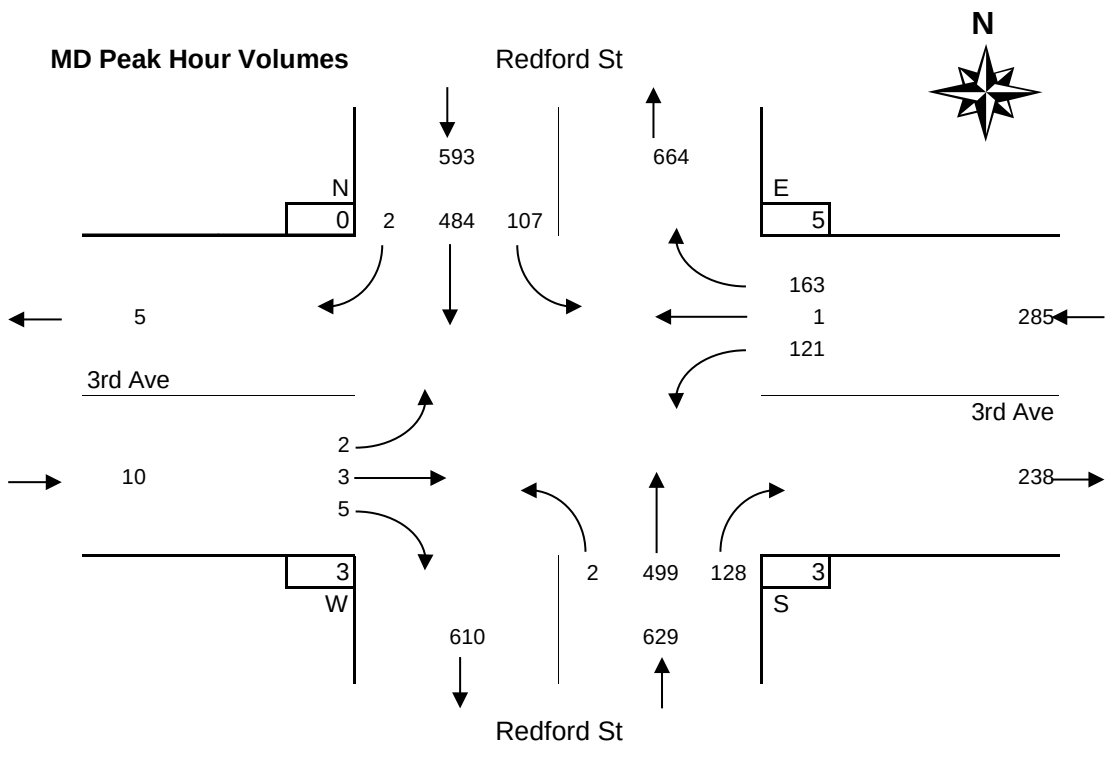

PM Peak Period
Regular Vehicles

3rd Avenue @ Redford Street
Thursday, September 28, 2017

Time Period Begins	Redford St NORTH Approach				Redford St SOUTH Approach				3rd Ave WEST Approach				3rd Ave EAST Approach				Total Volume		Peak	Crosswalks				Conflict	
	Left	Thru	Right	Total	Left	Thru	Right	Total	Left	Thru	Right	Total	Left	Thru	Right	Total	15-min	Hour		N	S	W	E	15 min	Hr
n/a																									
n/a																									
n/a																									
n/a																									
n/a																									
n/a																									
n/a																									
n/a																									
n/a																									
n/a																									
n/a																									
n/a																									
n/a																									
n/a																									
n/a																									
n/a																									
n/a																									
n/a																									
n/a																									
Total																									0
Avg Hr																									

Peak hour of the intersection

Pk Hr																		*							0
15x4																		+							0
PHF																									n/a

Peak hour of conflicting volumes for the intersection

Pk Hr																		*							0
15x4																		+							0
PHF																									n/a

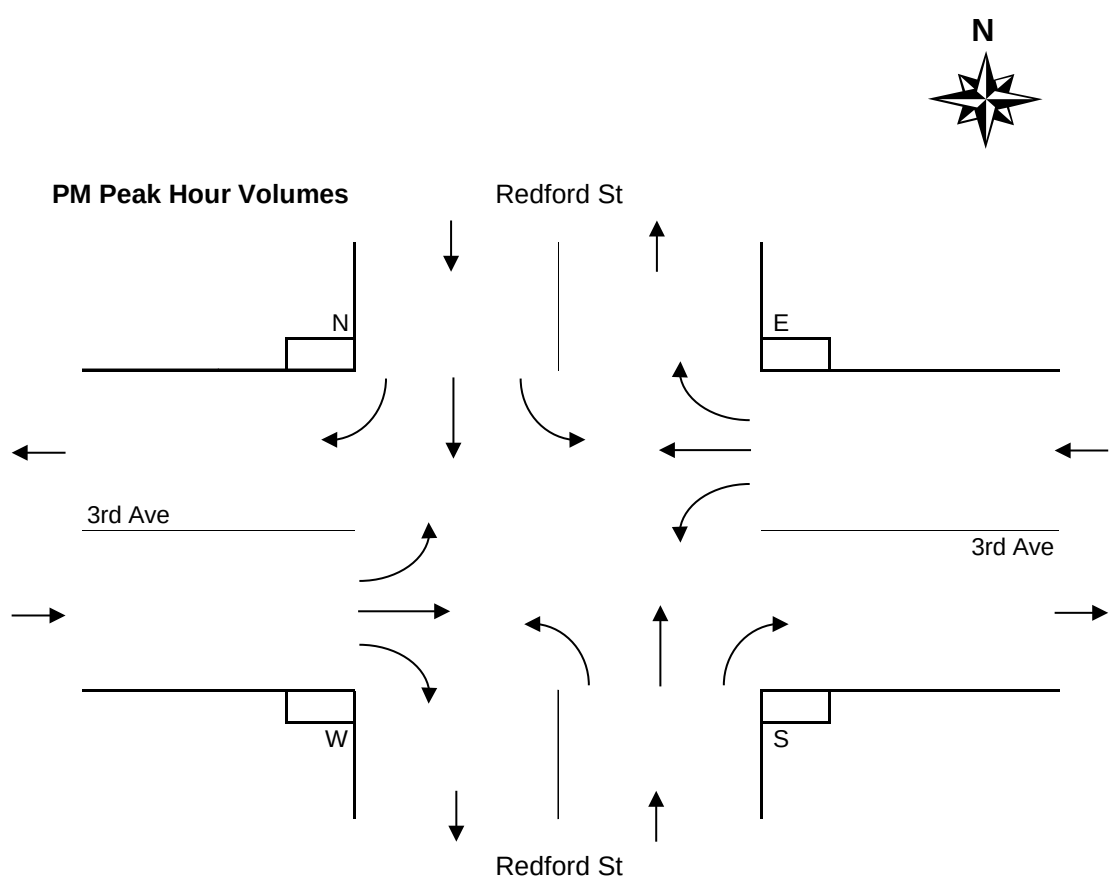

Period Hourly Averages
Regular Vehicles

3rd Avenue @ Redford Street
Thursday, September 28, 2017

Entire Survey Period
8 Hours

	Redford St				Redford St				3rd Ave				3rd Ave				Total	Crosswalks			
	NORTH Approach				SOUTH Approach				WEST Approach				EAST Approach				Volume				
Totals	Left	Thru	Right	Total	Left	Thru	Right	Total	Left	Thru	Right	Total	Left	Thru	Right	Total		N	S	W	E
Total	636	3080	13	**3729**	18	2842	914	**3774**	12	13	17	**42**	900	13	1126	**2039**	9584	2	15	12	49
Avg Hr	80	385	2	**466**	2	355	114	**472**	2	2	2	**5**	113	2	141	**255**	1198	0	2	2	6

AM Peak Period
5 Hours

	Redford St				Redford St				3rd Ave				3rd Ave				Total	Crosswalks			
	NORTH Approach				SOUTH Approach				WEST Approach				EAST Approach				Volume				
Totals	Left	Thru	Right	Total	Left	Thru	Right	Total	Left	Thru	Right	Total	Left	Thru	Right	Total		N	S	W	E
Period	340	1656	4	**2000**	6	1458	515	**1979**	6	7	8	**21**	532	10	647	**1189**	5189	2	6	7	38
Avg Hr	68	331	1	**400**	1	292	103	**396**	1	1	2	**4**	106	2	129	**238**	1038	0	1	1	8

MD Peak Period
3 Hours

	Redford St				Redford St				3rd Ave				3rd Ave				Total	Crosswalks			
	NORTH Approach				SOUTH Approach				WEST Approach				EAST Approach				Volume				
Totals	Left	Thru	Right	Total	Left	Thru	Right	Total	Left	Thru	Right	Total	Left	Thru	Right	Total		N	S	W	E
Total	296	1424	9	**1729**	12	1384	399	**1795**	6	6	9	**21**	368	3	479	**850**	4395	0	9	5	11
Avg Hr	99	475	3	**576**	4	461	133	**598**	2	2	3	**7**	123	1	160	**283**	1465	0	3	2	4

PM Peak Period
Hours

	Redford St				Redford St				3rd Ave				3rd Ave				Total	Crosswalks			
	NORTH Approach				SOUTH Approach				WEST Approach				EAST Approach				Volume				
Totals	Left	Thru	Right	Total	Left	Thru	Right	Total	Left	Thru	Right	Total	Left	Thru	Right	Total		N	S	W	E
Total																					
Avg Hr																					

Average Hour Volumes

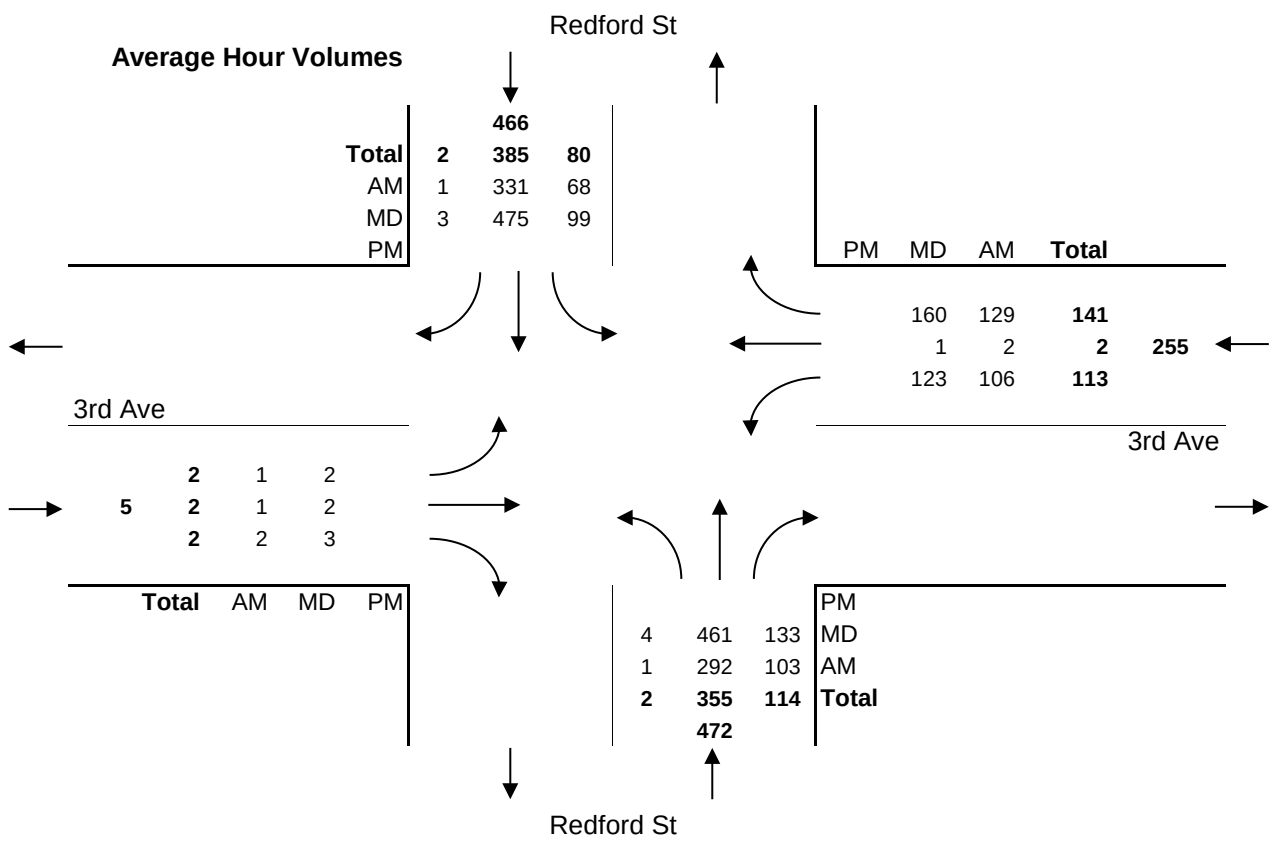

Major Route: 3rd Avenue
Minor Route: Redford Street
Municipality: Port Alberni
Filename: 1-3rd Ave @ Redford St-Sep 28, 2017.xlsx
Location #: 1

Date: September 28, 2017
Day-of-week: Thursday

East/West Route: 3rd Avenue
Intersection Type: 4-leg
Signalized?: Yes
Weather: Clear and dry

Vehicle Classifications: Regular Vehicles
Buses
Articulated Trucks
Cube Trucks
Dump Trucks
Emergency Trucks
Garbage Trucks
Logging Trucks
RVs
Utility Trucks

This data is for Buses

Shift	Start	End	Duration
AM	7:00	12:00	5.00
MD	12:00	15:00	3.00
PM			
Total	**7:00**		**8.00**

Notes: 24-hour clock used for reporting (15-minute increments)
North Approach - southbound vehicles approaching intersection from the north
15x4 - 15 min volume (from maximum 15 minute period of movement/approach in peak hour period [*]) x 4
Pedestrians - N indicates pedestrians crossing north approach (east/west)

Comments:

Survey Data
Buses

3rd Avenue @ Redford Street
Thursday, September 28, 2017

Time Period Begins	Redford St NORTH Approach				Redford St SOUTH Approach				3rd Ave WEST Approach				3rd Ave EAST Approach				Total Volume		Peak				
	Left	Thru	Right	Total	Left	Thru	Right	Total	Left	Thru	Right	Total	Left	Thru	Right	Total	15-min	Hour		N	S	W	E
7:00	0	0	0	**0**	0	0	0	**0**	0	0	0	**0**	0	0	0	**0**	**0**			0	0	0	0
7:15	0	0	0	**0**	0	0	0	**0**	0	0	0	**0**	0	0	0	**0**	**0**			0	0	0	0
7:30	0	0	1	**1**	0	0	1	**1**	0	0	0	**0**	0	0	0	**0**	**2**			0	0	0	0
7:45	0	2	0	**2**	0	1	0	**1**	0	0	0	**0**	0	1	0	**1**	**4**	6		0	0	0	0
8:00	0	0	0	**0**	0	0	1	**1**	0	0	0	**0**	0	0	1	**1**	**2**	8		0	0	0	0
8:15	0	0	0	**0**	0	1	0	**1**	0	0	0	**0**	0	0	0	**0**	**1**	9		0	0	0	0
8:30	1	1	0	**2**	0	0	0	**0**	0	0	0	**0**	0	0	0	**0**	**2**	9		0	0	0	0
8:45	0	1	0	**1**	0	0	1	**1**	0	0	0	**0**	0	0	1	**1**	**3**	8		0	0	0	0
9:00	0	2	0	**2**	0	0	0	**0**	0	0	0	**0**	0	0	0	**0**	**2**	8		0	0	0	0
9:15	1	0	0	**1**	0	2	0	**2**	0	0	0	**0**	0	0	0	**0**	**3**	10		0	0	0	0
9:30	0	0	0	**0**	0	0	0	**0**	0	0	0	**0**	0	0	0	**0**	**0**	8		0	0	0	0
9:45	0	0	0	**0**	0	0	0	**0**	0	0	0	**0**	0	0	0	**0**	**0**	5		0	0	0	0
10:00	0	0	0	**0**	0	1	0	**1**	0	0	0	**0**	0	0	2	**2**	**3**	6		0	0	0	0
10:15	0	0	0	**0**	0	0	1	**1**	0	0	0	**0**	0	0	0	**0**	**1**	4		0	0	0	0
10:30	1	0	0	**1**	0	0	0	**0**	0	0	0	**0**	0	0	0	**0**	**1**	5		0	0	0	0
10:45	0	0	0	**0**	0	0	0	**0**	0	0	0	**0**	0	0	0	**0**	**0**	5		0	0	0	0
11:00	0	0	0	**0**	0	0	1	**1**	0	0	0	**0**	1	0	0	**1**	**2**	4	*	0	0	0	0
11:15	1	0	0	**1**	0	0	0	**0**	0	0	0	**0**	0	0	0	**0**	**1**	4	*	0	0	0	0
11:30	0	0	0	**0**	0	0	2	**2**	0	0	0	**0**	0	0	0	**0**	**2**	5	*	0	0	0	0
11:45	0	0	0	**0**	0	0	0	**0**	0	0	0	**0**	0	0	2	**2**	**2**	7	+	0	0	0	0
Total	4	6	1	**11**	0	5	7	**12**	0	0	0	**0**	1	1	6	**8**	**31**			0	0	0	0
12:00	0	0	0	**0**	0	0	0	**0**	0	0	0	**0**	0	0	0	**0**	**0**			0	0	0	0
12:15	1	0	0	**1**	0	0	1	**1**	0	0	0	**0**	0	0	0	**0**	**2**			0	0	0	0
12:30	1	0	0	**1**	0	0	0	**0**	0	0	0	**0**	0	0	0	**0**	**1**			0	0	0	0
12:45	0	0	0	**0**	0	1	1	**2**	0	0	0	**0**	0	0	0	**0**	**2**	5		0	0	0	0
13:00	0	0	0	**0**	0	0	1	**1**	0	0	0	**0**	1	0	0	**1**	**2**	7		0	0	0	0
13:15	0	0	0	**0**	0	0	1	**1**	0	0	0	**0**	0	0	0	**0**	**1**	6		0	0	0	0
13:30	0	0	0	**0**	0	1	0	**1**	0	0	0	**0**	0	0	0	**0**	**1**	6		0	0	0	0
13:45	1	4	0	**5**	0	1	0	**1**	0	0	0	**0**	0	0	1	**1**	**7**	11		0	0	0	0
14:00	0	0	0	**0**	0	0	0	**0**	0	0	0	**0**	0	0	0	**0**	**0**	9	*	0	0	0	0
14:15	0	0	0	**0**	0	1	1	**2**	0	0	0	**0**	0	0	1	**1**	**3**	11	*	0	0	0	0
14:30	0	0	0	**0**	0	1	0	**1**	0	0	0	**0**	1	0	0	**1**	**2**	12	*	0	0	0	0
14:45	0	0	0	**0**	0	0	0	**0**	0	0	0	**0**	0	0	0	**0**	**0**	5	+	0	0	0	0
n/a																							
n/a																							
n/a																							
n/a																							
Total	3	4	0	**7**	0	5	5	**10**	0	0	0	**0**	2	0	2	**4**	**21**			0	0	0	0
n/a																							
n/a																							
n/a																							
n/a																							
n/a																							
n/a																							
n/a																							
n/a																							
n/a																							
n/a																							
n/a																							
n/a																							
n/a																							
n/a																							
n/a																							
n/a																							
n/a																							
n/a																							
Total																							

AM Peak Period
Buses

3rd Avenue @ Redford Street
Thursday, September 28, 2017

Time Period Begins	Redford St NORTH Approach				Redford St SOUTH Approach				3rd Ave WEST Approach				3rd Ave EAST Approach				Total Volume		Peak					Conflict	
	Left	Thru	Right	Total	Left	Thru	Right	Total	Left	Thru	Right	Total	Left	Thru	Right	Total	15-min	Hour		N	S	W	E	15 min	Hr
7:00	0	0	0	0	0	0	0	0	0	0	0	0	0	0	0	0	0			0	0	0	0	0	
7:15	0	0	0	0	0	0	0	0	0	0	0	0	0	0	0	0	0			0	0	0	0	0	
7:30	0	0	1	1	0	0	1	1	0	0	0	0	0	0	0	0	2			0	0	0	0	1	
7:45	0	2	0	2	0	1	0	1	0	0	0	0	0	1	0	1	4	6		0	0	0	0	3	4
8:00	0	0	0	0	0	0	1	1	0	0	0	0	0	0	1	1	2	8		0	0	0	0	2	6
8:15	0	0	0	0	0	1	0	1	0	0	0	0	0	0	0	0	1	9		0	0	0	0	1	7
8:30	1	1	0	2	0	0	0	0	0	0	0	0	0	0	0	0	2	9		0	0	0	0	1	7
8:45	0	1	0	1	0	0	1	1	0	0	0	0	0	0	1	1	3	8		0	0	0	0	2	6
9:00	0	2	0	2	0	0	0	0	0	0	0	0	0	0	0	0	2	8		0	0	0	0	2	6
9:15	1	0	0	1	0	2	0	2	0	0	0	0	0	0	0	0	3	10		0	0	0	0	3	8
9:30	0	0	0	0	0	0	0	0	0	0	0	0	0	0	0	0	0	8		0	0	0	0	0	7
9:45	0	0	0	0	0	0	0	0	0	0	0	0	0	0	0	0	0	5		0	0	0	0	0	5
10:00	0	0	0	0	0	1	0	1	0	0	0	0	0	0	2	2	3	6		0	0	0	0	3	6
10:15	0	0	0	0	0	0	1	1	0	0	0	0	0	0	0	0	1	4		0	0	0	0	1	4
10:30	1	0	0	1	0	0	0	0	0	0	0	0	0	0	0	0	1	5		0	0	0	0	1	5
10:45	0	0	0	0	0	0	0	0	0	0	0	0	0	0	0	0	0	5		0	0	0	0	0	5
11:00	0	0	0	0	0	0	1	1	0	0	0	0	1	0	0	1	2	4	*	0	0	0	0	2	4
11:15	1	0	0	1	0	0	0	0	0	0	0	0	0	0	0	0	1	4	*	0	0	0	0	1	4
11:30	0	0	0	0	0	0	2	2	0	0	0	0	0	0	0	0	2	5	*	0	0	0	0	2	5
11:45	0	0	0	0	0	0	0	0	0	0	0	0	0	0	2	2	2	7	+	0	0	0	0	2	7
Total	4	6	1	**11**	0	5	7	**12**	0	0	0	**0**	1	1	6	**8**	31			0	0	0	0		23
Avg Hr	1	1	0	**2**	0	1	1	**2**	0	0	0	**0**	0	0	1	**2**	6			0	0	0	0		

Peak hour of the intersection

Pk Hr	1	0	0	1	0	0	3	3	0	0	0	0	1	0	2	3	7	*		0	0	0	0		6
15x4	4	0	0	4	0	0	8	8	0	0	0	0	4	0	8	8	8	+		0	0	0	0		20
PHF	0.25	n/a	n/a	**0.25**	n/a	n/a	0.38	**0.38**	n/a	n/a	n/a	**n/a**	0.25	n/a	0.25	**0.38**	0.88			n/a	n/a	n/a	n/a		0.30

Peak hour of conflicting volumes for the intersection

Pk Hr	1	0	0	1	0	0	3	3	0	0	0	0	1	0	2	3	7	*		0	0	0	0		6
15x4	4	0	0	4	0	0	8	8	0	0	0	0	4	0	8	8	8	+		0	0	0	0		20
PHF	0.25	n/a	n/a	**0.25**	n/a	n/a	0.38	**0.38**	n/a	n/a	n/a	**n/a**	0.25	n/a	0.25	**0.38**	0.88			n/a	n/a	n/a	n/a		0.30

** Calculated peak hour occurs during the first or last hour of shift and therefore may be invalid. **

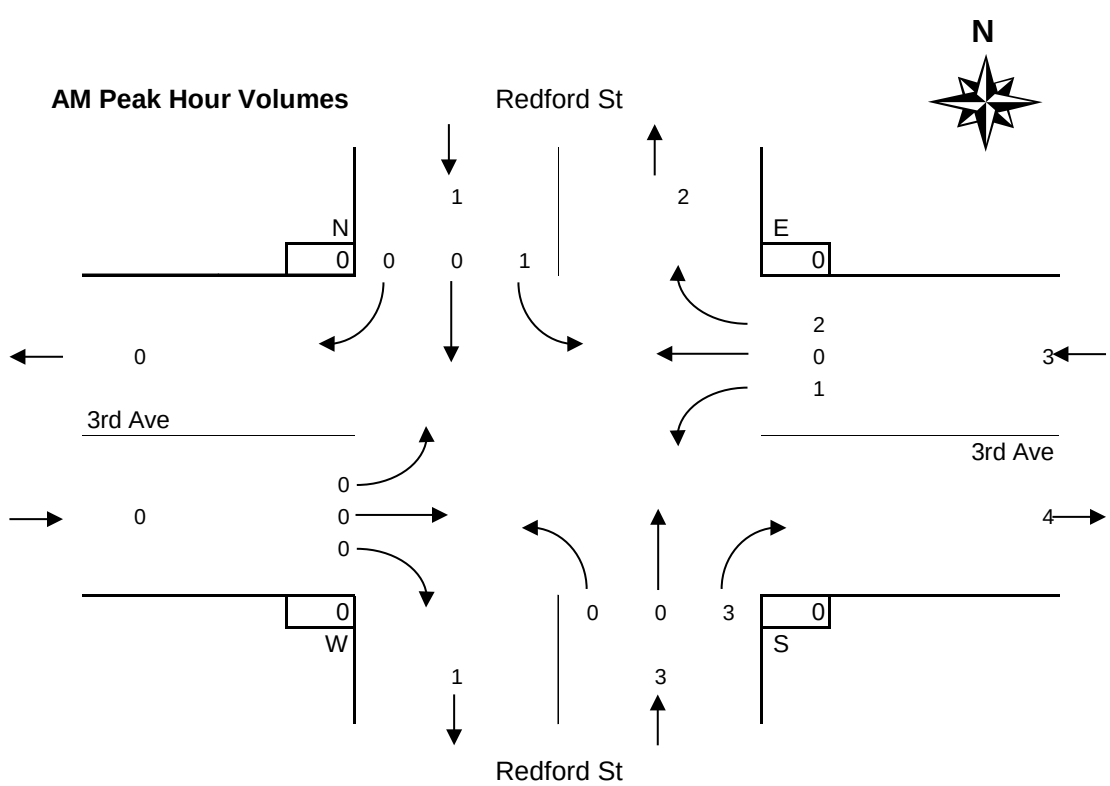

MD Peak Period
Buses

3rd Avenue @ Redford Street
Thursday, September 28, 2017

Time Period Begins	Redford St NORTH Approach				Redford St SOUTH Approach				3rd Ave WEST Approach				3rd Ave EAST Approach				Total Volume		Peak					Conflict	
	Left	Thru	Right	Total	Left	Thru	Right	Total	Left	Thru	Right	Total	Left	Thru	Right	Total	15-min	Hour		N	S	W	E	15 min	Hr
12:00	0	0	0	0	0	0	0	0	0	0	0	0	0	0	0	0	0			0	0	0	0	0	
12:15	1	0	0	1	0	0	1	1	0	0	0	0	0	0	0	0	2			0	0	0	0	2	
12:30	1	0	0	1	0	0	0	0	0	0	0	0	0	0	0	0	1			0	0	0	0	1	
12:45	0	0	0	0	0	1	1	2	0	0	0	0	0	0	0	0	2	5		0	0	0	0	2	5
13:00	0	0	0	0	0	0	1	1	0	0	0	0	1	0	0	1	2	7		0	0	0	0	2	7
13:15	0	0	0	0	0	0	1	1	0	0	0	0	0	0	0	0	1	6		0	0	0	0	1	6
13:30	0	0	0	0	0	1	0	1	0	0	0	0	0	0	0	0	1	6		0	0	0	0	1	6
13:45	1	4	0	5	0	1	0	1	0	0	0	0	0	0	1	1	7	11		0	0	0	0	5	9
14:00	0	0	0	0	0	0	0	0	0	0	0	0	0	0	0	0	0	9	*	0	0	0	0	0	7
14:15	0	0	0	0	0	1	1	2	0	0	0	0	0	0	1	1	3	11	*	0	0	0	0	3	9
14:30	0	0	0	0	0	1	0	1	0	0	0	0	1	0	0	1	2	12	*	0	0	0	0	2	10
14:45	0	0	0	0	0	0	0	0	0	0	0	0	0	0	0	0	0	5	+	0	0	0	0	0	5
n/a																									
n/a																									
n/a																									
n/a																									
Total	3	4	0	**7**	0	5	5	**10**	0	0	0	**0**	2	0	2	**4**	21			0	0	0	0		15
Avg Hr	1	1	0	**2**	0	2	2	**3**	0	0	0	**0**	1	0	1	**1**	7			0	0	0	0		

Peak hour of the intersection

Pk Hr	0	0	0	0	0	2	1	3	0	0	0	0	1	0	1	2	5	*		0	0	0	0		4
15x4	0	0	0	0	0	4	4	8	0	0	0	0	4	0	4	4	12	+		0	0	0	0		12
PHF	n/a	n/a	n/a	**n/a**	n/a	0.50	0.25	**0.38**	n/a	n/a	n/a	**n/a**	0.25	n/a	0.25	**0.50**	0.42			n/a	n/a	n/a	n/a		0.33

Peak hour of conflicting volumes for the intersection

Pk Hr	1	4	0	5	0	3	1	4	0	0	0	0	0	0	2	2	11	*		0	0	0	0		7
15x4	4	16	0	20	0	4	4	8	0	0	0	0	0	0	4	4	28	+		0	0	0	0		20
PHF	0.25	0.25	n/a	**0.25**	n/a	0.75	0.25	**0.50**	n/a	n/a	n/a	**n/a**	n/a	n/a	0.50	**0.50**	0.39			n/a	n/a	n/a	n/a		0.35

** Calculated peak hour occurs during the first or last hour of shift and therefore may be invalid. **

MD Peak Hour Volumes

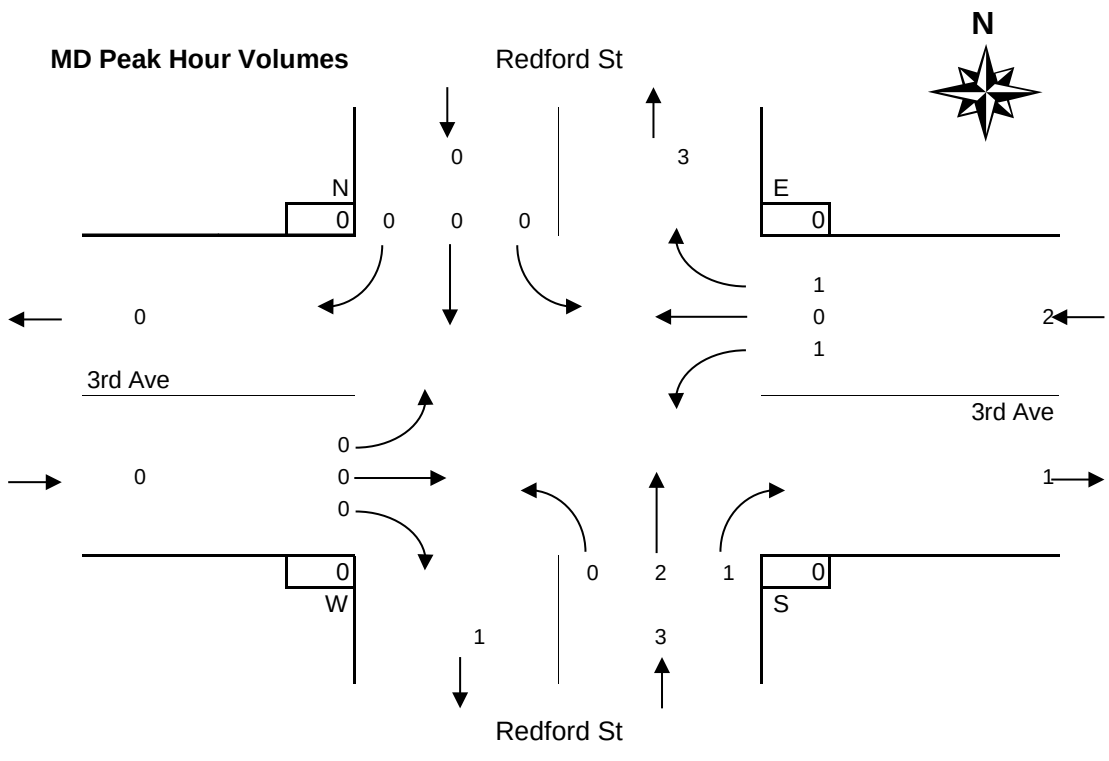

PM Peak Period
Buses

3rd Avenue @ Redford Street
Thursday, September 28, 2017

Time Period Begins	Redford St NORTH Approach				Redford St SOUTH Approach				3rd Ave WEST Approach				3rd Ave EAST Approach				Total Volume		Peak					Conflict	
	Left	Thru	Right	Total	Left	Thru	Right	Total	Left	Thru	Right	Total	Left	Thru	Right	Total	15-min	Hour		N	S	W	E	15 min	Hr
n/a																									
n/a																									
n/a																									
n/a																									
n/a																									
n/a																									
n/a																									
n/a																									
n/a																									
n/a																									
n/a																									
n/a																									
n/a																									
n/a																									
n/a																									
n/a																									
n/a																									
n/a																									
n/a																									
Total																									0
Avg Hr																									

Peak hour of the intersection

Pk Hr																		*							0
15x4																		+							0
PHF																									n/a

Peak hour of conflicting volumes for the intersection

Pk Hr																		*							0
15x4																		+							0
PHF																									n/a

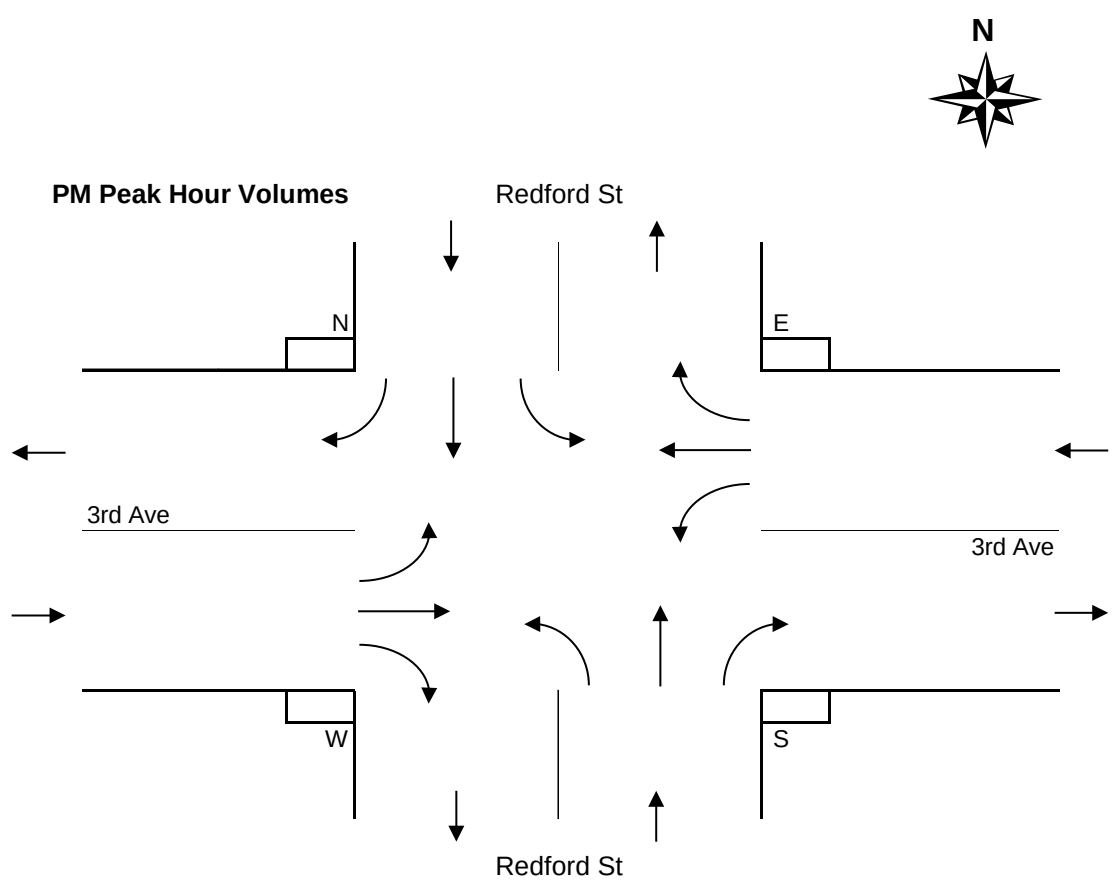

Period Hourly Averages
Buses

3rd Avenue @ Redford Street
Thursday, September 28, 2017

Entire Survey Period
8 Hours

	Redford St				Redford St				3rd Ave				3rd Ave							
	NORTH Approach				SOUTH Approach				WEST Approach				EAST Approach				Total			
	Left	Thru	Right	Total	Left	Thru	Right	Total	Left	Thru	Right	Total	Left	Thru	Right	Total	Volume	N	S	W	E
Total	7	10	1	**18**	0	10	12	**22**	0	0	0	**0**	3	1	8	**12**	52	0	0	0	0
Avg Hr	1	1	0	**2**	0	1	2	**3**	0	0	0	**0**	0	0	1	**2**	7	0	0	0	0

AM Peak Period
5 Hours

	Redford St				Redford St				3rd Ave				3rd Ave							
	NORTH Approach				SOUTH Approach				WEST Approach				EAST Approach				Total			
Totals	Left	Thru	Right	Total	Left	Thru	Right	Total	Left	Thru	Right	Total	Left	Thru	Right	Total	Volume	N	S	W	E
Period	4	6	1	**11**	0	5	7	**12**	0	0	0	**0**	1	1	6	**8**	31	0	0	0	0
Avg Hr	1	1	0	**2**	0	1	1	**2**	0	0	0	**0**	0	0	1	**2**	6	0	0	0	0

MD Peak Period
3 Hours

	Redford St				Redford St				3rd Ave				3rd Ave							
	NORTH Approach				SOUTH Approach				WEST Approach				EAST Approach				Total			
Totals	Left	Thru	Right	Total	Left	Thru	Right	Total	Left	Thru	Right	Total	Left	Thru	Right	Total	Volume	N	S	W	E
Total	3	4	0	**7**	0	5	5	**10**	0	0	0	**0**	2	0	2	**4**	21	0	0	0	0
Avg Hr	1	1	0	**2**	0	2	2	**3**	0	0	0	**0**	1	0	1	**1**	7	0	0	0	0

PM Peak Period
Hours

	Redford St				Redford St				3rd Ave				3rd Ave							
	NORTH Approach				SOUTH Approach				WEST Approach				EAST Approach				Total			
Totals	Left	Thru	Right	Total	Left	Thru	Right	Total	Left	Thru	Right	Total	Left	Thru	Right	Total	Volume	N	S	W	E
Total																				
Avg Hr																				

Average Hour Volumes

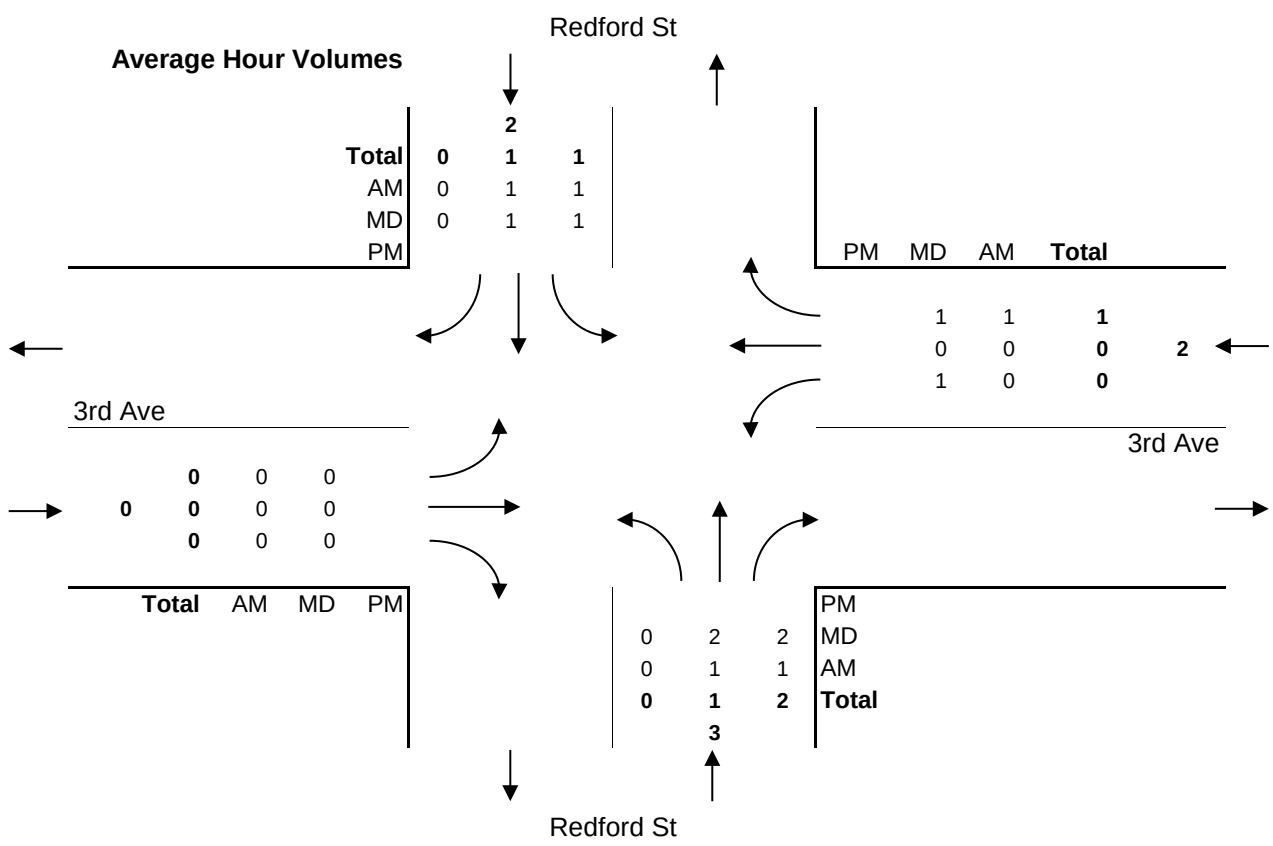

Vehicle Turning Movement Survey
With Classification

Major Route: 3rd Avenue
Minor Route: Redford Street
Municipality: Port Alberni
Filename: 1-3rd Ave @ Redford St-Sep 28, 2017.xlsx
Location #: 1

Date: September 28, 2017
Day-of-week: Thursday

East/West Route: 3rd Avenue
Intersection Type: 4-leg
Signalized?: Yes
Weather: Clear and dry

Vehicle Classifications: Regular Vehicles
Buses
Articulated Trucks
Cube Trucks
Dump Trucks
Emergency Trucks
Garbage Trucks
Logging Trucks
RVs
Utility Trucks

This data is for Articulated Trucks

Shift	Start	End	Duration
AM	7:00	12:00	5.00
MD	12:00	15:00	3.00
PM			
Total	**7:00**		**8.00**

Notes: 24-hour clock used for reporting (15-minute increments)
North Approach - southbound vehicles approaching intersection from the north
15x4 - 15 min volume (from maximum 15 minute period of movement/approach in peak hour period [*]) x 4
Pedestrians - N indicates pedestrians crossing north approach (east/west)

Comments:

Survey Data
Articulated Trucks

3rd Avenue @ Redford Street
Thursday, September 28, 2017

Time Period Begins	Redford St NORTH Approach				Redford St SOUTH Approach				3rd Ave WEST Approach				3rd Ave EAST Approach				Total Volume		Peak				
	Left	Thru	Right	Total	Left	Thru	Right	Total	Left	Thru	Right	Total	Left	Thru	Right	Total	15-min	Hour		N	S	W	E
7:00	0	0	0	**0**	0	0	0	**0**	0	1	0	**1**	3	0	0	**3**	**4**			0	0	0	0
7:15	0	0	0	**0**	0	0	3	**3**	0	1	0	**1**	1	1	0	**2**	**6**			0	0	0	0
7:30	0	0	0	**0**	0	1	2	**3**	0	1	1	**2**	3	0	0	**3**	**8**			0	0	0	0
7:45	0	0	0	**0**	0	0	1	**1**	0	1	1	**2**	1	2	0	**3**	**6**	24		0	0	0	0
8:00	0	0	0	**0**	0	0	1	**1**	0	0	1	**1**	3	0	0	**3**	**5**	25		0	0	0	0
8:15	0	0	0	**0**	0	0	2	**2**	0	1	0	**1**	1	0	0	**1**	**4**	23		0	0	0	0
8:30	0	1	0	**1**	0	0	2	**2**	0	0	0	**0**	1	0	0	**1**	**4**	19		0	0	0	0
8:45	0	0	0	**0**	0	0	3	**3**	0	0	0	**0**	1	0	1	**2**	**5**	18		0	0	0	0
9:00	0	0	0	**0**	0	0	2	**2**	0	0	0	**0**	2	0	0	**2**	**4**	17		0	0	0	0
9:15	0	1	0	**1**	0	0	0	**0**	0	0	0	**0**	3	1	1	**5**	**6**	19		0	0	0	0
9:30	0	1	0	**1**	0	0	0	**0**	0	1	0	**1**	0	0	0	**0**	**2**	17		0	0	0	0
9:45	0	1	0	**1**	0	0	1	**1**	0	0	0	**0**	2	0	0	**2**	**4**	16		0	0	0	0
10:00	1	1	0	**2**	0	1	1	**2**	0	0	0	**0**	0	1	0	**1**	**5**	17		0	0	0	0
10:15	0	1	0	**1**	0	0	0	**0**	0	1	0	**1**	1	0	0	**1**	**3**	14		0	0	0	0
10:30	1	0	0	**1**	0	1	0	**1**	0	0	0	**0**	0	1	0	**1**	**3**	15		0	0	0	0
10:45	0	0	0	**0**	0	0	4	**4**	0	1	0	**1**	2	1	0	**3**	**8**	19		0	0	0	0
11:00	0	0	0	**0**	0	1	1	**2**	0	1	0	**1**	2	0	0	**2**	**5**	19	*	0	0	0	0
11:15	0	1	0	**1**	0	0	0	**0**	0	0	0	**0**	1	2	0	**3**	**4**	20	*	0	0	0	0
11:30	0	0	0	**0**	0	2	1	**3**	0	1	0	**1**	2	1	0	**3**	**7**	24	*	0	0	0	0
11:45	0	0	0	**0**	0	1	1	**2**	0	1	0	**1**	2	1	0	**3**	**6**	22	+	0	0	0	0
Total	2	7	0	**9**	0	7	25	**32**	0	11	3	**14**	31	11	2	**44**	**99**			0	0	0	0
12:00	1	0	1	**2**	0	2	4	**6**	0	2	0	**2**	1	0	0	**1**	**11**			0	0	0	0
12:15	0	1	0	**1**	0	0	1	**1**	0	0	0	**0**	0	0	0	**0**	**2**			0	0	0	0
12:30	0	1	0	**1**	0	1	1	**2**	0	0	0	**0**	1	1	0	**2**	**5**			0	0	0	0
12:45	0	1	0	**1**	0	0	1	**1**	0	0	0	**0**	0	0	0	**0**	**2**	20		0	0	0	0
13:00	0	0	0	**0**	0	0	0	**0**	0	1	0	**1**	2	2	0	**4**	**5**	14		0	0	0	0
13:15	0	0	0	**0**	0	0	3	**3**	0	2	0	**2**	2	1	0	**3**	**8**	20		0	0	0	0
13:30	1	0	0	**1**	0	2	1	**3**	0	1	0	**1**	1	0	0	**1**	**6**	21		0	0	0	0
13:45	0	0	0	**0**	0	0	2	**2**	0	1	0	**1**	3	0	0	**3**	**6**	25		0	0	0	0
14:00	0	0	0	**0**	0	0	2	**2**	0	0	0	**0**	2	0	1	**3**	**5**	25	*	0	0	0	0
14:15	0	3	0	**3**	0	0	1	**1**	0	2	0	**2**	0	1	0	**1**	**7**	24	*	0	0	0	0
14:30	0	1	0	**1**	0	1	4	**5**	0	1	0	**1**	1	1	1	**3**	**10**	28	*	0	0	0	0
14:45	0	1	0	**1**	0	0	2	**2**	0	1	0	**1**	0	1	1	**2**	**6**	28	+	0	0	0	0
n/a																							
n/a																							
n/a																							
n/a																							
Total	2	8	1	**11**	0	6	22	**28**	0	11	0	**11**	13	7	3	**23**	**73**			0	0	0	0
n/a																							
n/a																							
n/a																							
n/a																							
n/a																							
n/a																							
n/a																							
n/a																							
n/a																							
n/a																							
n/a																							
n/a																							
n/a																							
n/a																							
n/a																							
n/a																							
n/a																							
n/a																							
Total																							

AM Peak Period
Articulated Trucks

3rd Avenue @ Redford Street
Thursday, September 28, 2017

Time Period Begins	Redford St NORTH Approach				Redford St SOUTH Approach				3rd Ave WEST Approach				3rd Ave EAST Approach				Total Volume		Peak					Conflict	
	Left	Thru	Right	Total	Left	Thru	Right	Total	Left	Thru	Right	Total	Left	Thru	Right	Total	15-min	Hour		N	S	W	E	15 min	Hr
7:00	0	0	0	0	0	0	0	0	0	1	0	1	3	0	0	3	4			0	0	0	0	4	
7:15	0	0	0	0	0	0	3	3	0	1	0	1	1	1	0	2	6			0	0	0	0	5	
7:30	0	0	0	0	0	1	2	3	0	1	1	2	3	0	0	3	8			0	0	0	0	8	
7:45	0	0	0	0	0	0	1	1	0	1	1	2	1	2	0	3	6	24		0	0	0	0	4	21
8:00	0	0	0	0	0	0	1	1	0	0	1	1	3	0	0	3	5	25		0	0	0	0	5	22
8:15	0	0	0	0	0	0	2	2	0	1	0	1	1	0	0	1	4	23		0	0	0	0	4	21
8:30	0	1	0	1	0	0	2	2	0	0	0	0	1	0	0	1	4	19		0	0	0	0	3	16
8:45	0	0	0	0	0	0	3	3	0	0	0	0	1	0	1	2	5	18		0	0	0	0	4	16
9:00	0	0	0	0	0	0	2	2	0	0	0	0	2	0	0	2	4	17		0	0	0	0	4	15
9:15	0	1	0	1	0	0	0	0	0	0	0	0	3	1	1	5	6	19		0	0	0	0	4	15
9:30	0	1	0	1	0	0	0	0	0	1	0	1	0	0	0	0	2	17		0	0	0	0	2	14
9:45	0	1	0	1	0	0	1	1	0	0	0	0	2	0	0	2	4	16		0	0	0	0	3	13
10:00	1	1	0	2	0	1	1	2	0	0	0	0	0	1	0	1	5	17		0	0	0	0	4	13
10:15	0	1	0	1	0	0	0	0	0	1	0	1	1	0	0	1	3	14		0	0	0	0	3	12
10:30	1	0	0	1	0	1	0	1	0	0	0	0	0	1	0	1	3	15		0	0	0	0	3	13
10:45	0	0	0	0	0	0	4	4	0	1	0	1	2	1	0	3	8	19		0	0	0	0	7	17
11:00	0	0	0	0	0	1	1	2	0	1	0	1	2	0	0	2	5	19	*	0	0	0	0	5	18
11:15	0	1	0	1	0	0	0	0	0	0	0	0	1	2	0	3	4	20	*	0	0	0	0	3	18
11:30	0	0	0	0	0	2	1	3	0	1	0	1	2	1	0	3	7	24	*	0	0	0	0	6	21
11:45	0	0	0	0	0	1	1	2	0	1	0	1	2	1	0	3	6	22	+	0	0	0	0	5	19
Total	2	7	0	**9**	0	7	25	**32**	0	11	3	**14**	31	11	2	**44**	99			0	0	0	0		79
Avg Hr	0	1	0	**2**	0	1	5	**6**	0	2	1	**3**	6	2	0	**9**	20			0	0	0	0		

Peak hour of the intersection

Pk Hr	0	1	0	1	0	4	3	7	0	3	0	3	7	4	0	11	22	*		0	0	0	0		17
15x4	0	4	0	4	0	8	4	12	0	4	0	4	8	8	0	12	28	+		0	0	0	0		24
PHF	n/a	0.25	n/a	**0.25**	n/a	0.50	0.75	**0.58**	n/a	0.75	n/a	**0.75**	0.88	0.50	n/a	**0.92**	0.79			n/a	n/a	n/a	n/a		0.71

Peak hour of conflicting volumes for the intersection

Pk Hr	0	1	0	1	0	4	3	7	0	3	0	3	7	4	0	11	22	*		0	0	0	0		17
15x4	0	4	0	4	0	8	4	12	0	4	0	4	8	8	0	12	28	+		0	0	0	0		24
PHF	n/a	0.25	n/a	**0.25**	n/a	0.50	0.75	**0.58**	n/a	0.75	n/a	**0.75**	0.88	0.50	n/a	**0.92**	0.79			n/a	n/a	n/a	n/a		0.71

** Calculated peak hour occurs during the first or last hour of shift and therefore may be invalid. **

AM Peak Hour Volumes

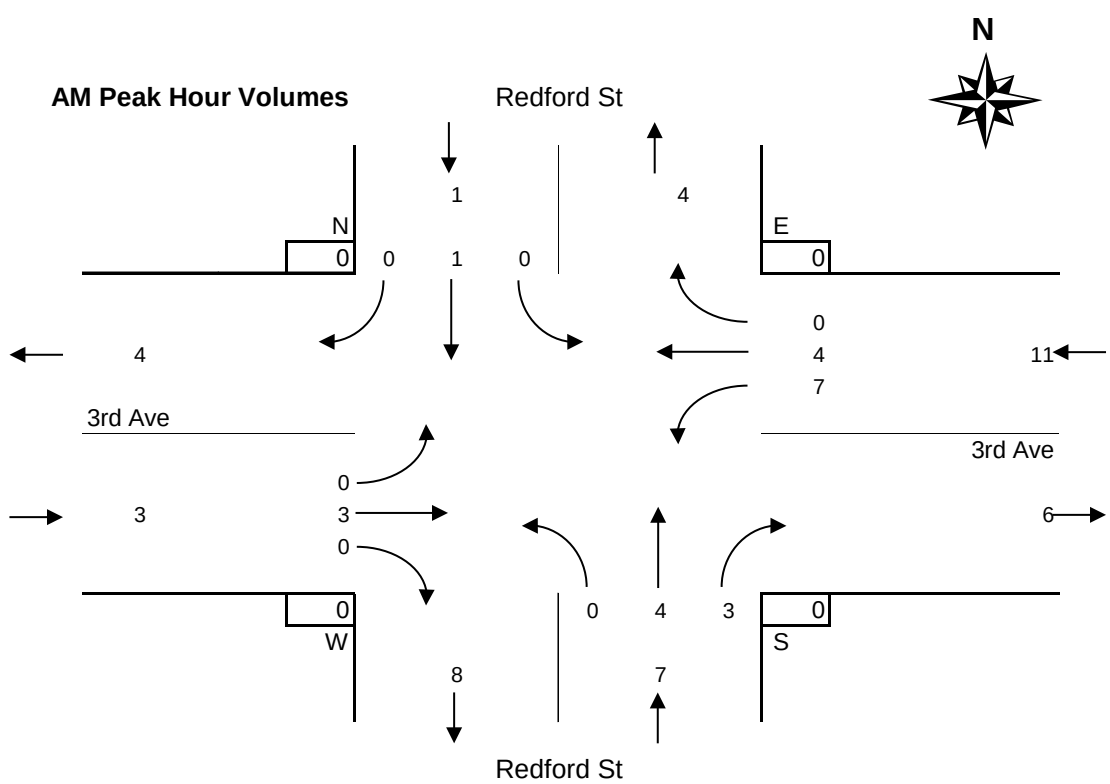

MD Peak Period
Articulated Trucks

3rd Avenue @ Redford Street
Thursday, September 28, 2017

Time Period Begins	Redford St NORTH Approach				Redford St SOUTH Approach				3rd Ave WEST Approach				3rd Ave EAST Approach				Total Volume		Peak					Conflict	
	Left	Thru	Right	Total	Left	Thru	Right	Total	Left	Thru	Right	Total	Left	Thru	Right	Total	15-min	Hour		N	S	W	E	15 min	Hr
12:00	1	0	1	2	0	2	4	6	0	2	0	2	1	0	0	1	11			0	0	0	0	10	
12:15	0	1	0	1	0	0	1	1	0	0	0	0	0	0	0	0	2			0	0	0	0	1	
12:30	0	1	0	1	0	1	1	2	0	0	0	0	1	1	0	2	5			0	0	0	0	3	
12:45	0	1	0	1	0	0	1	1	0	0	0	0	0	0	0	0	2	20		0	0	0	0	1	15
13:00	0	0	0	0	0	0	0	0	0	1	0	1	2	2	0	4	5	14		0	0	0	0	3	8
13:15	0	0	0	0	0	0	3	3	0	2	0	2	2	1	0	3	8	20		0	0	0	0	7	14
13:30	1	0	0	1	0	2	1	3	0	1	0	1	1	0	0	1	6	21		0	0	0	0	6	17
13:45	0	0	0	0	0	0	2	2	0	1	0	1	3	0	0	3	6	25		0	0	0	0	6	22
14:00	0	0	0	0	0	0	2	2	0	0	0	0	2	0	1	3	5	25	*	0	0	0	0	4	23
14:15	0	3	0	3	0	0	1	1	0	2	0	2	0	1	0	1	7	24	*	0	0	0	0	5	21
14:30	0	1	0	1	0	1	4	5	0	1	0	1	1	1	1	3	10	28	*	0	0	0	0	7	22
14:45	0	1	0	1	0	0	2	2	0	1	0	1	0	1	1	2	6	28	+	0	0	0	0	4	20
n/a																									
n/a																									
n/a																									
n/a																									
Total	2	8	1	**11**	0	6	22	**28**	0	11	0	**11**	13	7	3	**23**	73			0	0	0	0		54
Avg Hr	1	3	0	**4**	0	2	7	**9**	0	4	0	**4**	4	2	1	**8**	24			0	0	0	0		

Peak hour of the intersection

Pk Hr	0	5	0	5	0	1	9	10	0	4	0	4	3	3	3	9	28	*		0	0	0	0		17
15x4	0	12	0	12	0	4	16	20	0	8	0	8	8	4	4	12	40	+		0	0	0	0		36
PHF	n/a	0.42	n/a	**0.42**	n/a	0.25	0.56	**0.50**	n/a	0.50	n/a	**0.50**	0.38	0.75	0.75	**0.75**	0.70			n/a	n/a	n/a	n/a		0.47

Peak hour of conflicting volumes for the intersection

Pk Hr	1	3	0	4	0	2	6	8	0	4	0	4	6	1	1	8	24	*		0	0	0	0		19
15x4	4	12	0	12	0	8	8	12	0	8	0	8	12	4	4	12	28	+		0	0	0	0		40
PHF	0.25	0.25	n/a	**0.33**	n/a	0.25	0.75	**0.67**	n/a	0.50	n/a	**0.50**	0.50	0.25	0.25	**0.67**	0.86			n/a	n/a	n/a	n/a		0.48

** Calculated peak hour occurs during the first or last hour of shift and therefore may be invalid. **

MD Peak Hour Volumes

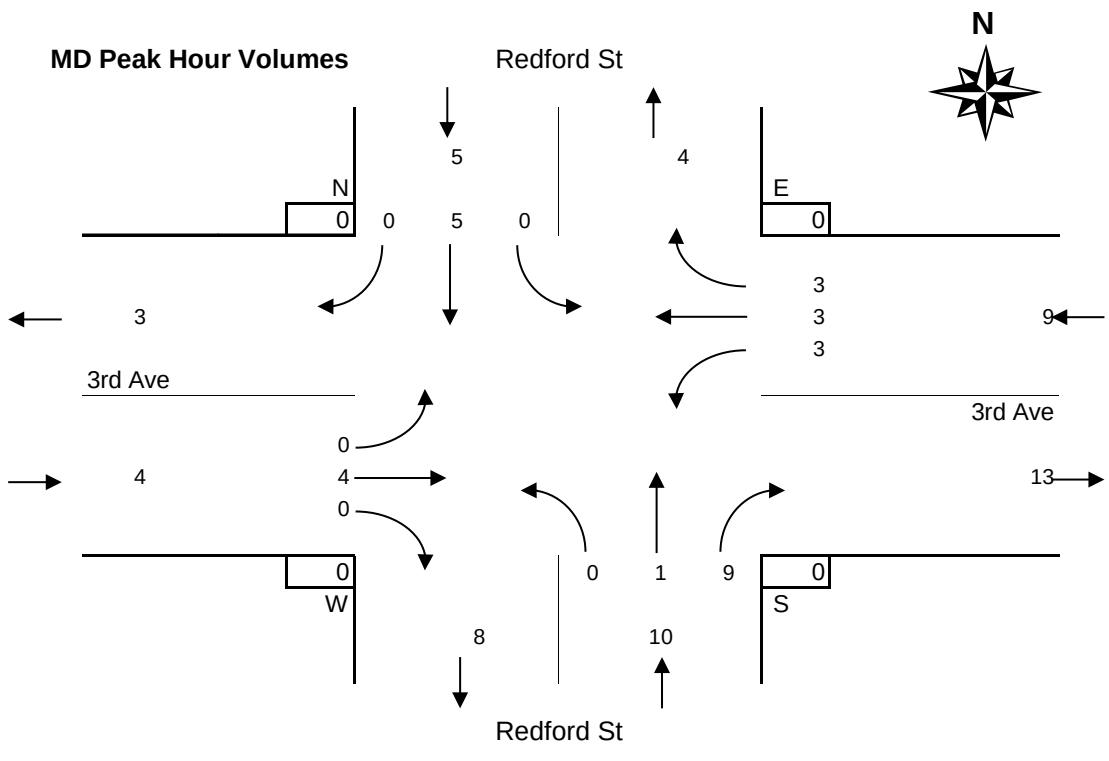

PM Peak Period
Articulated Trucks

3rd Avenue @ Redford Street
Thursday, September 28, 2017

Time Period Begins	Redford St NORTH Approach				Redford St SOUTH Approach				3rd Ave WEST Approach				3rd Ave EAST Approach				Total Volume		Peak					Conflict	
	Left	Thru	Right	Total	Left	Thru	Right	Total	Left	Thru	Right	Total	Left	Thru	Right	Total	15-min	Hour		N	S	W	E	15 min	Hr
n/a																									
n/a																									
n/a																									
n/a																									
n/a																									
n/a																									
n/a																									
n/a																									
n/a																									
n/a																									
n/a																									
n/a																									
n/a																									
n/a																									
n/a																									
n/a																									
n/a																									
n/a																									
n/a																									
Total																									0
Avg Hr																									

Peak hour of the intersection

Pk Hr																		*							0
15x4																		+							0
PHF																									n/a

Peak hour of conflicting volumes for the intersection

Pk Hr																		*							0
15x4																		+							0
PHF																									n/a

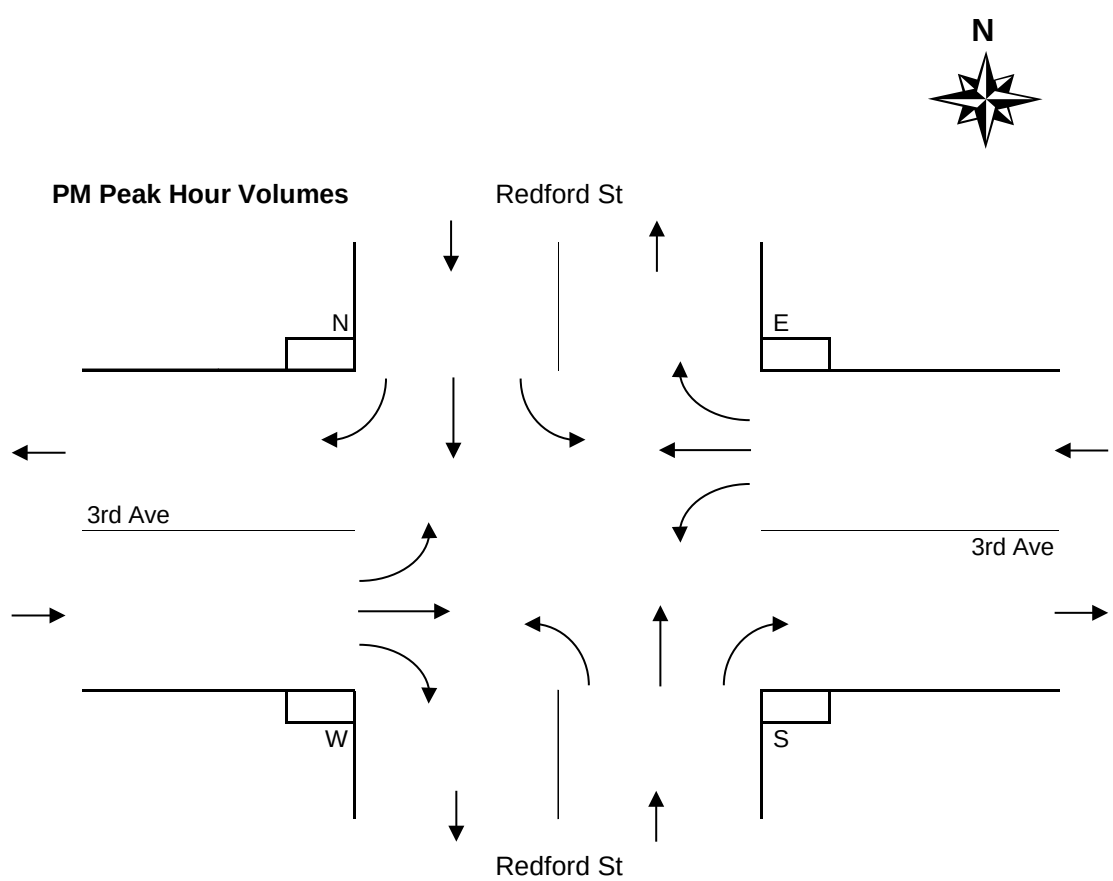

Period Hourly Averages
Articulated Trucks

3rd Avenue @ Redford Street
Thursday, September 28, 2017

Entire Survey Period
8 Hours

	Redford St				Redford St				3rd Ave				3rd Ave							
	NORTH Approach				SOUTH Approach				WEST Approach				EAST Approach				Total			
	Left	Thru	Right	Total	Left	Thru	Right	Total	Left	Thru	Right	Total	Left	Thru	Right	Total	Volume	N	S	W	E
Total	4	15	1	**20**	0	13	47	**60**	0	22	3	**25**	44	18	5	**67**	172	0	0	0	0
Avg Hr	1	2	0	**3**	0	2	6	**8**	0	3	0	**3**	6	2	1	**8**	22	0	0	0	0

AM Peak Period
5 Hours

	Redford St				Redford St				3rd Ave				3rd Ave							
	NORTH Approach				SOUTH Approach				WEST Approach				EAST Approach				Total			
Totals	Left	Thru	Right	Total	Left	Thru	Right	Total	Left	Thru	Right	Total	Left	Thru	Right	Total	Volume	N	S	W	E
Period	2	7	0	**9**	0	7	25	**32**	0	11	3	**14**	31	11	2	**44**	99	0	0	0	0
Avg Hr	0	1	0	**2**	0	1	5	**6**	0	2	1	**3**	6	2	0	**9**	20	0	0	0	0

MD Peak Period
3 Hours

	Redford St				Redford St				3rd Ave				3rd Ave							
	NORTH Approach				SOUTH Approach				WEST Approach				EAST Approach				Total			
Totals	Left	Thru	Right	Total	Left	Thru	Right	Total	Left	Thru	Right	Total	Left	Thru	Right	Total	Volume	N	S	W	E
Total	2	8	1	**11**	0	6	22	**28**	0	11	0	**11**	13	7	3	**23**	73	0	0	0	0
Avg Hr	1	3	0	**4**	0	2	7	**9**	0	4	0	**4**	4	2	1	**8**	24	0	0	0	0

PM Peak Period
Hours

	Redford St				Redford St				3rd Ave				3rd Ave							
	NORTH Approach				SOUTH Approach				WEST Approach				EAST Approach				Total			
Totals	Left	Thru	Right	Total	Left	Thru	Right	Total	Left	Thru	Right	Total	Left	Thru	Right	Total	Volume	N	S	W	E
Total																				
Avg Hr																				

Average Hour Volumes

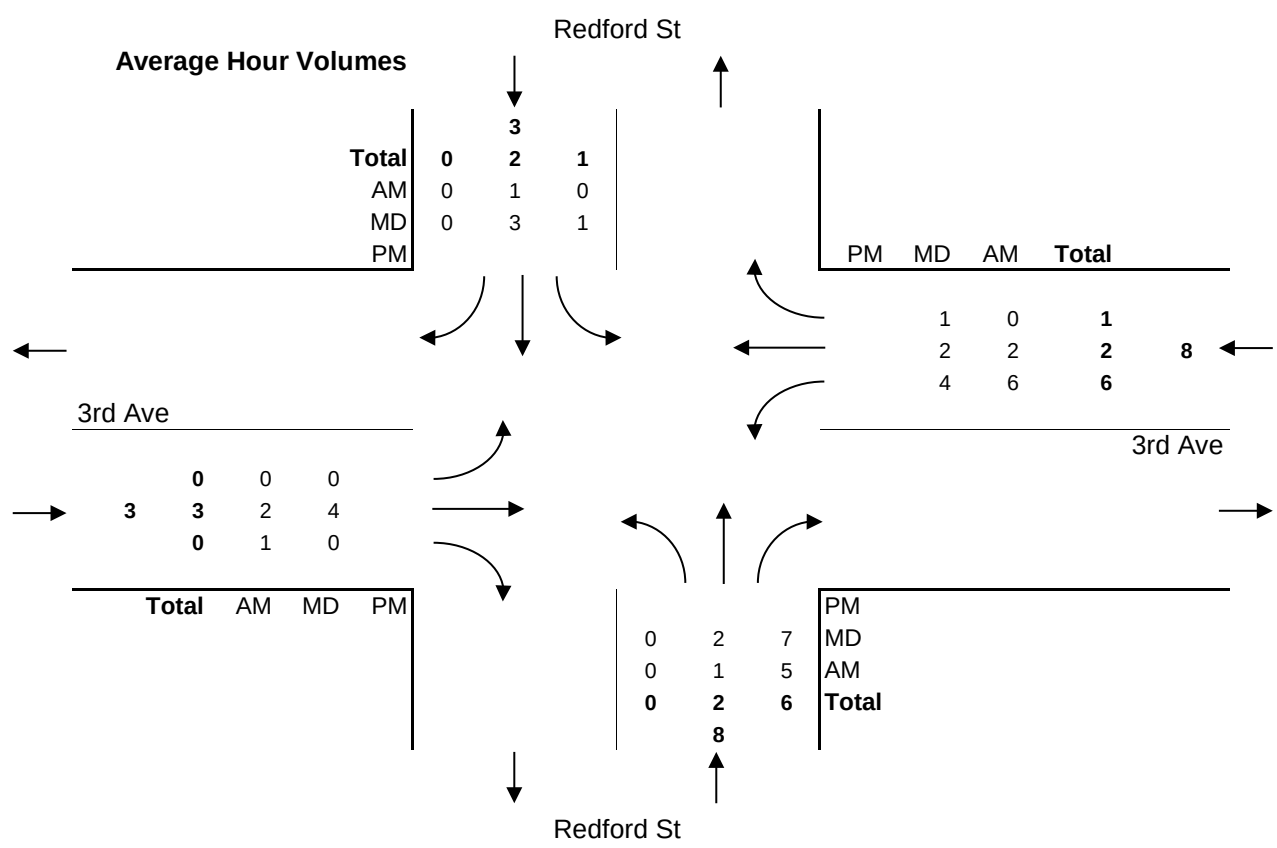

Major Route: 3rd Avenue
Minor Route: Redford Street
Municipality: Port Alberni
Filename: 1-3rd Ave @ Redford St-Sep 28, 2017.xlsx
Location #: 1

Date: September 28, 2017
Day-of-week: Thursday

East/West Route: 3rd Avenue
Intersection Type: 4-leg
Signalized?: Yes
Weather: Clear and dry

Vehicle Classifications: Regular Vehicles
Buses
Articulated Trucks
Cube Trucks
Dump Trucks
Emergency Trucks
Garbage Trucks
Logging Trucks
RVs
Utility Trucks

This data is for Cube Trucks

Shift	Start	End	Duration
AM	7:00	12:00	5.00
MD	12:00	15:00	3.00
PM			
Total	**7:00**		**8.00**

Notes: 24-hour clock used for reporting (15-minute increments)
North Approach - southbound vehicles approaching intersection from the north
15x4 - 15 min volume (from maximum 15 minute period of movement/approach in peak hour period [*]) x 4
Pedestrians - N indicates pedestrians crossing north approach (east/west)

Comments:

Survey Data
Cube Trucks

3rd Avenue @ Redford Street
Thursday, September 28, 2017

Time Period Begins	Redford St NORTH Approach				Redford St SOUTH Approach				3rd Ave WEST Approach				3rd Ave EAST Approach				Total Volume		Peak				
	Left	Thru	Right	Total	Left	Thru	Right	Total	Left	Thru	Right	Total	Left	Thru	Right	Total	15-min	Hour		N	S	W	E
7:00	0	0	0	**0**	0	2	1	**3**	0	0	0	**0**	0	0	0	**0**	**3**			0	0	0	0
7:15	1	0	0	**1**	0	1	0	**1**	0	0	0	**0**	0	0	0	**0**	**2**			0	0	0	0
7:30	0	0	1	**1**	0	1	0	**1**	0	0	0	**0**	0	0	1	**1**	**3**			0	0	0	0
7:45	0	1	0	**1**	0	1	0	**1**	0	0	1	**1**	0	0	0	**0**	**3**	11		0	0	0	0
8:00	0	0	0	**0**	0	0	0	**0**	0	0	0	**0**	0	0	0	**0**	**0**	8		0	0	0	0
8:15	0	0	0	**0**	0	0	0	**0**	0	0	0	**0**	0	0	0	**0**	**0**	6		0	0	0	0
8:30	1	1	0	**2**	0	0	1	**1**	0	0	0	**0**	0	0	1	**1**	**4**	7		0	0	0	0
8:45	0	3	0	**3**	0	0	0	**0**	0	0	0	**0**	0	0	0	**0**	**3**	7		0	0	0	0
9:00	0	2	0	**2**	0	1	1	**2**	0	0	0	**0**	0	0	0	**0**	**4**	11		0	0	0	0
9:15	0	2	0	**2**	0	1	4	**5**	0	0	0	**0**	0	0	1	**1**	**8**	19		0	0	0	0
9:30	1	1	0	**2**	0	0	0	**0**	0	0	0	**0**	0	0	0	**0**	**2**	17		0	0	0	0
9:45	0	1	0	**1**	0	0	1	**1**	0	0	0	**0**	2	0	0	**2**	**4**	18		0	0	0	0
10:00	0	1	0	**1**	0	0	0	**0**	0	0	0	**0**	1	0	0	**1**	**2**	16		0	0	0	0
10:15	0	1	0	**1**	0	1	0	**1**	0	0	0	**0**	1	0	0	**1**	**3**	11		0	0	0	0
10:30	0	0	0	**0**	0	0	0	**0**	0	0	0	**0**	0	0	0	**0**	**0**	9		0	0	0	0
10:45	1	0	0	**1**	0	0	1	**1**	0	0	0	**0**	0	1	1	**2**	**4**	9		0	0	0	0
11:00	0	0	0	**0**	0	0	0	**0**	0	0	1	**1**	0	0	1	**1**	**2**	9	*	0	0	0	0
11:15	0	2	0	**2**	0	0	0	**0**	0	0	0	**0**	0	0	0	**0**	**2**	8	*	0	0	0	0
11:30	0	0	0	**0**	0	3	2	**5**	0	0	0	**0**	0	0	0	**0**	**5**	13	*	0	0	0	0
11:45	0	2	0	**2**	0	3	1	**4**	0	0	0	**0**	0	0	0	**0**	**6**	15	+	0	0	0	0
Total	4	17	1	**22**	0	14	12	**26**	0	0	2	**2**	4	1	5	**10**	**60**			0	0	0	0
12:00	1	1	0	**2**	0	0	0	**0**	0	0	0	**0**	0	0	1	**1**	**3**			0	0	0	0
12:15	0	1	0	**1**	0	0	0	**0**	0	0	0	**0**	0	0	0	**0**	**1**			0	0	0	0
12:30	1	0	0	**1**	0	1	0	**1**	0	0	0	**0**	0	0	0	**0**	**2**			0	0	0	0
12:45	0	0	0	**0**	0	1	0	**1**	0	0	0	**0**	0	0	0	**0**	**1**	7		0	0	0	0
13:00	1	2	0	**3**	0	0	0	**0**	0	0	0	**0**	0	0	0	**0**	**3**	7		0	0	0	0
13:15	0	2	0	**2**	0	2	0	**2**	0	0	0	**0**	0	0	0	**0**	**4**	10		0	0	0	0
13:30	1	0	0	**1**	0	0	0	**0**	0	0	0	**0**	0	0	0	**0**	**1**	9		0	0	0	0
13:45	1	1	0	**2**	0	2	1	**3**	0	0	0	**0**	1	0	1	**2**	**7**	15		0	0	0	0
14:00	0	0	0	**0**	0	2	0	**2**	0	0	0	**0**	0	0	0	**0**	**2**	14	*	0	0	0	0
14:15	1	0	0	**1**	0	2	0	**2**	0	0	0	**0**	0	0	0	**0**	**3**	13	*	0	0	0	0
14:30	0	0	0	**0**	0	0	0	**0**	0	0	0	**0**	1	0	0	**1**	**1**	13	*	0	0	0	0
14:45	0	0	0	**0**	0	0	0	**0**	0	0	0	**0**	0	0	0	**0**	**0**	6	+	0	0	0	0
n/a																							
n/a																							
n/a																							
n/a																							
Total	6	7	0	**13**	0	10	1	**11**	0	0	0	**0**	2	0	2	**4**	**28**			0	0	0	0
n/a																							
n/a																							
n/a																							
n/a																							
n/a																							
n/a																							
n/a																							
n/a																							
n/a																							
n/a																							
n/a																							
n/a																							
n/a																							
n/a																							
n/a																							
n/a																							
n/a																							
n/a																							
Total																							

AM Peak Period
Cube Trucks

3rd Avenue @ Redford Street
Thursday, September 28, 2017

Time Period Begins	Redford St NORTH Approach				Redford St SOUTH Approach				3rd Ave WEST Approach				3rd Ave EAST Approach				Total Volume		Peak					Conflict	
	Left	Thru	Right	Total	Left	Thru	Right	Total	Left	Thru	Right	Total	Left	Thru	Right	Total	15-min	Hour		N	S	W	E	15 min	Hr
7:00	0	0	0	0	0	2	1	3	0	0	0	0	0	0	0	0	3			0	0	0	0	3	
7:15	1	0	0	1	0	1	0	1	0	0	0	0	0	0	0	0	2			0	0	0	0	2	
7:30	0	0	1	1	0	1	0	1	0	0	0	0	0	0	1	1	3			0	0	0	0	2	
7:45	0	1	0	1	0	1	0	1	0	0	1	1	0	0	0	0	3	11		0	0	0	0	2	9
8:00	0	0	0	0	0	0	0	0	0	0	0	0	0	0	0	0	0	8		0	0	0	0	0	6
8:15	0	0	0	0	0	0	0	0	0	0	0	0	0	0	0	0	0	6		0	0	0	0	0	4
8:30	1	1	0	2	0	0	1	1	0	0	0	0	0	0	1	1	4	7		0	0	0	0	3	5
8:45	0	3	0	3	0	0	0	0	0	0	0	0	0	0	0	0	3	7		0	0	0	0	3	6
9:00	0	2	0	2	0	1	1	2	0	0	0	0	0	0	0	0	4	11		0	0	0	0	2	8
9:15	0	2	0	2	0	1	4	5	0	0	0	0	0	0	1	1	8	19		0	0	0	0	6	14
9:30	1	1	0	2	0	0	0	0	0	0	0	0	0	0	0	0	2	17		0	0	0	0	1	12
9:45	0	1	0	1	0	0	1	1	0	0	0	0	2	0	0	2	4	18		0	0	0	0	3	12
10:00	0	1	0	1	0	0	0	0	0	0	0	0	1	0	0	1	2	16		0	0	0	0	2	12
10:15	0	1	0	1	0	1	0	1	0	0	0	0	1	0	0	1	3	11		0	0	0	0	2	8
10:30	0	0	0	0	0	0	0	0	0	0	0	0	0	0	0	0	0	9		0	0	0	0	0	7
10:45	1	0	0	1	0	0	1	1	0	0	0	0	0	1	1	2	4	9		0	0	0	0	4	8
11:00	0	0	0	0	0	0	0	0	0	0	1	1	0	0	1	1	2	9	*	0	0	0	0	1	7
11:15	0	2	0	2	0	0	0	0	0	0	0	0	0	0	0	0	2	8	*	0	0	0	0	2	7
11:30	0	0	0	0	0	3	2	5	0	0	0	0	0	0	0	0	5	13	*	0	0	0	0	5	12
11:45	0	2	0	2	0	3	1	4	0	0	0	0	0	0	0	0	6	15	+	0	0	0	0	4	12
Total	4	17	1	**22**	0	14	12	**26**	0	0	2	**2**	4	1	5	**10**	60			0	0	0	0		36
Avg Hr	1	3	0	**4**	0	3	2	**5**	0	0	0	**0**	1	0	1	**2**	12			0	0	0	0		

Peak hour of the intersection

Pk Hr	0	4	0	4	0	6	3	9	0	0	1	1	0	0	1	1	15	*		0	0	0	0		10
15x4	0	8	0	8	0	12	8	20	0	0	4	4	0	0	4	4	24	+		0	0	0	0		24
PHF	n/a	0.50	n/a	**0.50**	n/a	0.50	0.38	**0.45**	n/a	n/a	0.25	**0.25**	n/a	n/a	0.25	**0.25**	0.63			n/a	n/a	n/a	n/a		0.42

Peak hour of conflicting volumes for the intersection

Pk Hr	0	4	0	4	0	6	3	9	0	0	1	1	0	0	1	1	15	*		0	0	0	0		10
15x4	0	8	0	8	0	12	8	20	0	0	4	4	0	0	4	4	24	+		0	0	0	0		24
PHF	n/a	0.50	n/a	**0.50**	n/a	0.50	0.38	**0.45**	n/a	n/a	0.25	**0.25**	n/a	n/a	0.25	**0.25**	0.63			n/a	n/a	n/a	n/a		0.42

** Calculated peak hour occurs during the first or last hour of shift and therefore may be invalid. **

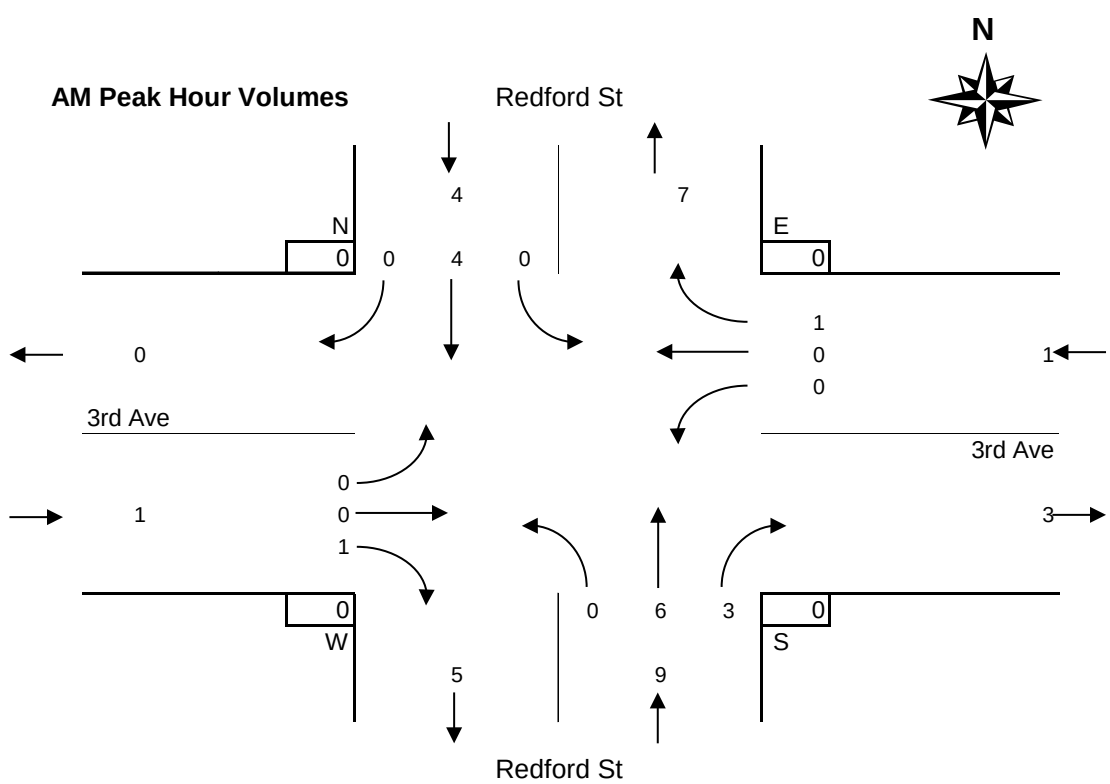

MD Peak Period
Cube Trucks

3rd Avenue @ Redford Street
Thursday, September 28, 2017

Time Period Begins	Redford St NORTH Approach				Redford St SOUTH Approach				3rd Ave WEST Approach				3rd Ave EAST Approach				Total Volume		Peak					Conflict	
	Left	Thru	Right	Total	Left	Thru	Right	Total	Left	Thru	Right	Total	Left	Thru	Right	Total	15-min	Hour		N	S	W	E	15 min	Hr
12:00	1	1	0	2	0	0	0	0	0	0	0	0	0	0	1	1	3			0	0	0	0	2	
12:15	0	1	0	1	0	0	0	0	0	0	0	0	0	0	0	0	1			0	0	0	0	1	
12:30	1	0	0	1	0	1	0	1	0	0	0	0	0	0	0	0	2			0	0	0	0	2	
12:45	0	0	0	0	0	1	0	1	0	0	0	0	0	0	0	0	1	7		0	0	0	0	1	6
13:00	1	2	0	3	0	0	0	0	0	0	0	0	0	0	0	0	3	7		0	0	0	0	2	6
13:15	0	2	0	2	0	2	0	2	0	0	0	0	0	0	0	0	4	10		0	0	0	0	2	7
13:30	1	0	0	1	0	0	0	0	0	0	0	0	0	0	0	0	1	9		0	0	0	0	1	6
13:45	1	1	0	2	0	2	1	3	0	0	0	0	1	0	1	2	7	15		0	0	0	0	5	10
14:00	0	0	0	0	0	2	0	2	0	0	0	0	0	0	0	0	2	14	*	0	0	0	0	2	10
14:15	1	0	0	1	0	2	0	2	0	0	0	0	0	0	0	0	3	13	*	0	0	0	0	3	11
14:30	0	0	0	0	0	0	0	0	0	0	0	0	1	0	0	1	1	13	*	0	0	0	0	1	11
14:45	0	0	0	0	0	0	0	0	0	0	0	0	0	0	0	0	0	6	+	0	0	0	0	0	6
n/a																									
n/a																									
n/a																									
n/a																									
Total	6	7	0	**13**	0	10	1	**11**	0	0	0	**0**	2	0	2	**4**	28			0	0	0	0		19
Avg Hr	2	2	0	**4**	0	3	0	**4**	0	0	0	**0**	1	0	1	**1**	9			0	0	0	0		

Peak hour of the intersection

Pk Hr	1	0	0	1	0	4	0	4	0	0	0	0	1	0	0	1	6	*		0	0	0	0		6
15x4	4	0	0	4	0	8	0	8	0	0	0	0	4	0	0	4	12	+		0	0	0	0		16
PHF	0.25	n/a	n/a	**0.25**	n/a	0.50	n/a	**0.50**	n/a	n/a	n/a	**n/a**	0.25	n/a	n/a	**0.25**	0.50			n/a	n/a	n/a	n/a		0.38

Peak hour of conflicting volumes for the intersection

Pk Hr	3	1	0	4	0	6	1	7	0	0	0	0	1	0	1	2	13	*		0	0	0	0		11
15x4	4	4	0	8	0	8	4	12	0	0	0	0	4	0	4	8	28	+		0	0	0	0		20
PHF	0.75	0.25	n/a	**0.50**	n/a	0.75	0.25	**0.58**	n/a	n/a	n/a	**n/a**	0.25	n/a	0.25	**0.25**	0.46			n/a	n/a	n/a	n/a		0.55

** Calculated peak hour occurs during the first or last hour of shift and therefore may be invalid. **

MD Peak Hour Volumes

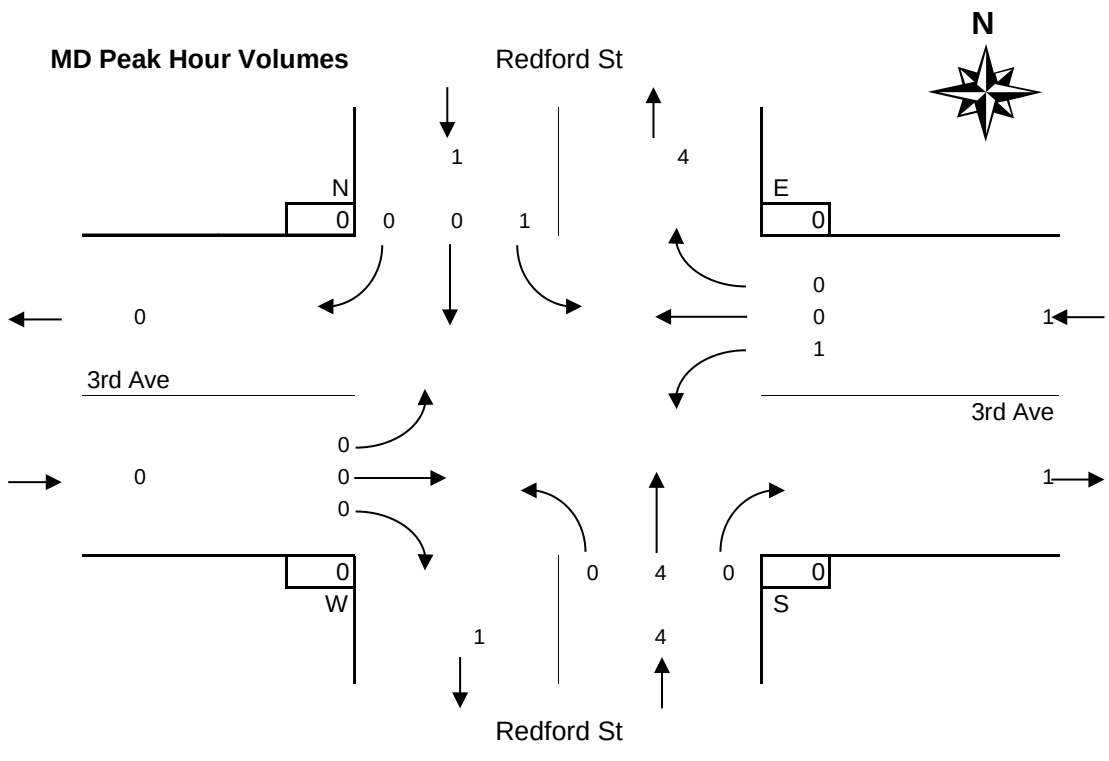

PM Peak Period
Cube Trucks

3rd Avenue @ Redford Street
Thursday, September 28, 2017

Time Period Begins	Redford St NORTH Approach				Redford St SOUTH Approach				3rd Ave WEST Approach				3rd Ave EAST Approach				Total Volume		Peak					Conflict	
	Left	Thru	Right	Total	Left	Thru	Right	Total	Left	Thru	Right	Total	Left	Thru	Right	Total	15-min	Hour		N	S	W	E	15 min	Hr
n/a																									
n/a																									
n/a																									
n/a																									
n/a																									
n/a																									
n/a																									
n/a																									
n/a																									
n/a																									
n/a																									
n/a																									
n/a																									
n/a																									
n/a																									
n/a																									
n/a																									
n/a																									
n/a																									
Total																									0
Avg Hr																									

Peak hour of the intersection

Pk Hr																		*							0
15x4																		+							0
PHF																									n/a

Peak hour of conflicting volumes for the intersection

Pk Hr																		*							0
15x4																		+							0
PHF																									n/a

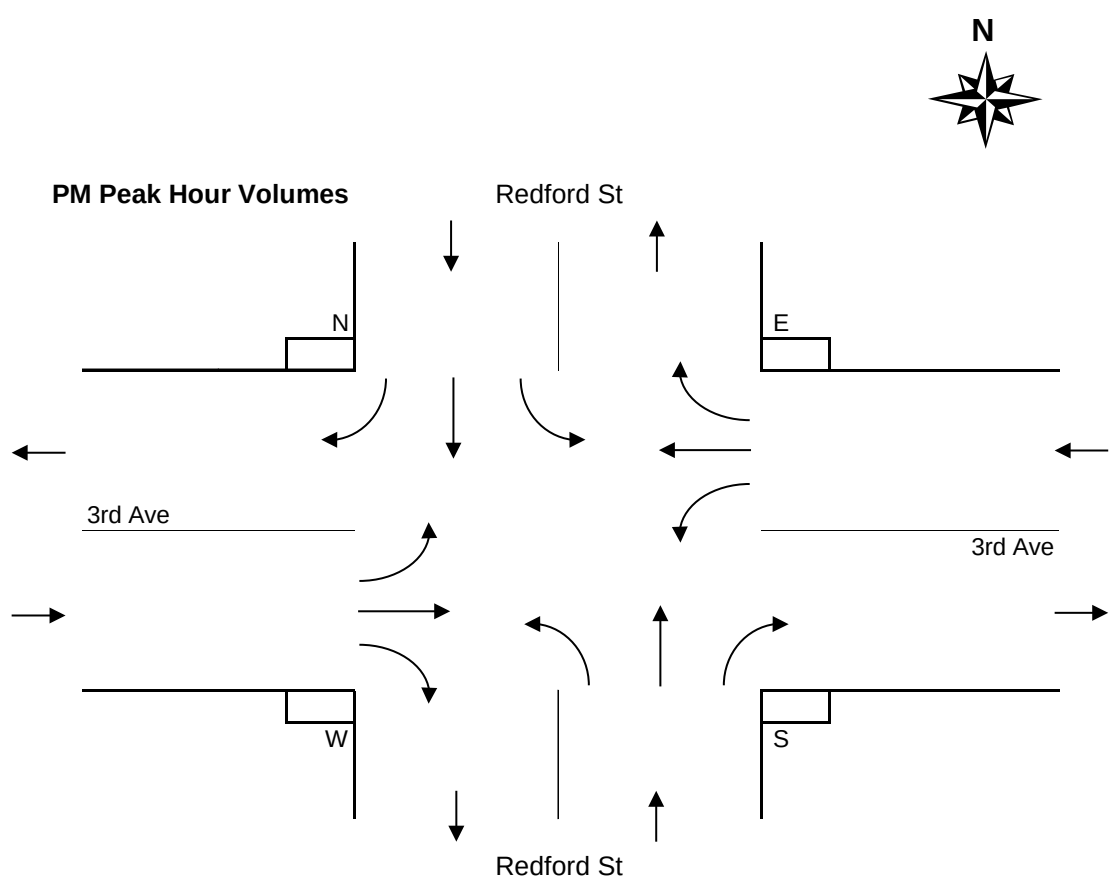

Period Hourly Averages
Cube Trucks

3rd Avenue @ Redford Street
Thursday, September 28, 2017

Entire Survey Period
8 Hours

	Redford St				Redford St				3rd Ave				3rd Ave							
	NORTH Approach				SOUTH Approach				WEST Approach				EAST Approach				Total			
	Left	Thru	Right	Total	Left	Thru	Right	Total	Left	Thru	Right	Total	Left	Thru	Right	Total	Volume	N	S	W	E
Total	10	24	1	**35**	0	24	13	**37**	0	0	2	**2**	6	1	7	**14**	88	0	0	0	0
Avg Hr	1	3	0	**4**	0	3	2	**5**	0	0	0	**0**	1	0	1	**2**	11	0	0	0	0

AM Peak Period
5 Hours

	Redford St				Redford St				3rd Ave				3rd Ave							
	NORTH Approach				SOUTH Approach				WEST Approach				EAST Approach				Total			
Totals	Left	Thru	Right	Total	Left	Thru	Right	Total	Left	Thru	Right	Total	Left	Thru	Right	Total	Volume	N	S	W	E
Period	4	17	1	**22**	0	14	12	**26**	0	0	2	**2**	4	1	5	**10**	60	0	0	0	0
Avg Hr	1	3	0	**4**	0	3	2	**5**	0	0	0	**0**	1	0	1	**2**	12	0	0	0	0

MD Peak Period
3 Hours

	Redford St				Redford St				3rd Ave				3rd Ave							
	NORTH Approach				SOUTH Approach				WEST Approach				EAST Approach				Total			
Totals	Left	Thru	Right	Total	Left	Thru	Right	Total	Left	Thru	Right	Total	Left	Thru	Right	Total	Volume	N	S	W	E
Total	6	7	0	**13**	0	10	1	**11**	0	0	0	**0**	2	0	2	**4**	28	0	0	0	0
Avg Hr	2	2	0	**4**	0	3	0	**4**	0	0	0	**0**	1	0	1	**1**	9	0	0	0	0

PM Peak Period
Hours

	Redford St				Redford St				3rd Ave				3rd Ave							
	NORTH Approach				SOUTH Approach				WEST Approach				EAST Approach				Total			
Totals	Left	Thru	Right	Total	Left	Thru	Right	Total	Left	Thru	Right	Total	Left	Thru	Right	Total	Volume	N	S	W	E
Total																				
Avg Hr																				

Average Hour Volumes

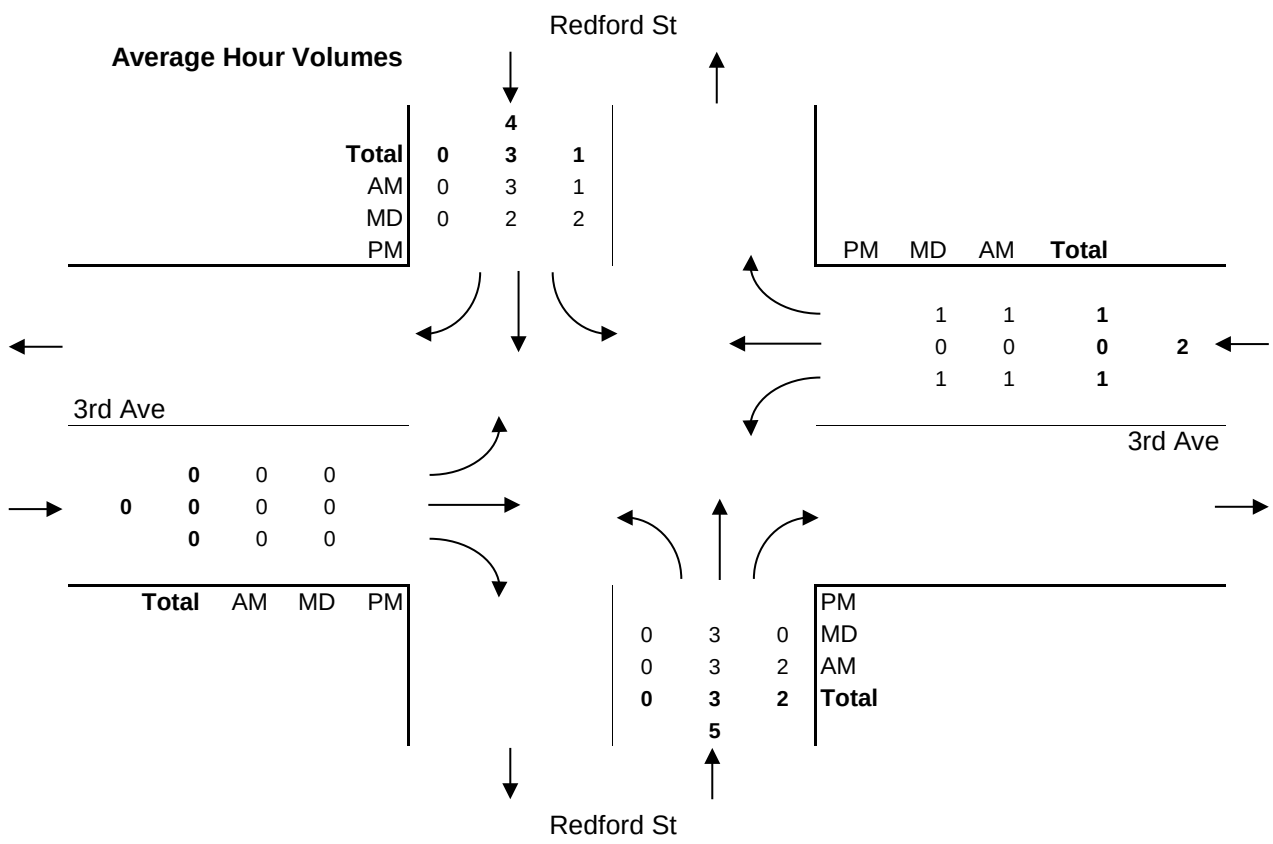

Vehicle Turning Movement Survey
With Classification

Major Route: 3rd Avenue
Minor Route: Redford Street
Municipality: Port Alberni
Filename: 1-3rd Ave @ Redford St-Sep 28, 2017.xlsx
Location #: 1

Date: September 28, 2017
Day-of-week: Thursday

East/West Route: 3rd Avenue
Intersection Type: 4-leg
Signalized?: Yes
Weather: Clear and dry

Vehicle Classifications: Regular Vehicles
Buses
Articulated Trucks
Cube Trucks
Dump Trucks
Emergency Trucks
Garbage Trucks
Logging Trucks
RVs
Utility Trucks

This data is for Dump Trucks

Shift	Start	End	Duration
AM	7:00	12:00	5.00
MD	12:00	15:00	3.00
PM			
Total	**7:00**		**8.00**

Notes: 24-hour clock used for reporting (15-minute increments)
North Approach - southbound vehicles approaching intersection from the north
15x4 - 15 min volume (from maximum 15 minute period of movement/approach in peak hour period [*]) x 4
Pedestrians - N indicates pedestrians crossing north approach (east/west)

Comments:

Survey Data
Dump Trucks

3rd Avenue @ Redford Street
Thursday, September 28, 2017

Time Period Begins	Redford St NORTH Approach				Redford St SOUTH Approach				3rd Ave WEST Approach				3rd Ave EAST Approach				Total Volume		Peak				
	Left	Thru	Right	Total	Left	Thru	Right	Total	Left	Thru	Right	Total	Left	Thru	Right	Total	15-min	Hour		N	S	W	E
7:00	0	0	0	**0**	0	0	0	**0**	0	0	0	**0**	0	0	0	**0**	**0**			0	0	0	0
7:15	0	1	0	**1**	0	0	0	**0**	0	0	0	**0**	0	0	0	**0**	**1**			0	0	0	0
7:30	0	0	0	**0**	0	0	0	**0**	0	0	0	**0**	1	0	0	**1**	**1**			0	0	0	0
7:45	0	2	0	**2**	0	3	0	**3**	0	0	0	**0**	0	0	0	**0**	**5**	7		0	0	0	0
8:00	0	2	0	**2**	0	0	0	**0**	0	0	0	**0**	0	0	0	**0**	**2**	9		0	0	0	0
8:15	0	1	0	**1**	0	2	0	**2**	0	0	0	**0**	0	0	0	**0**	**3**	11		0	0	0	0
8:30	0	2	0	**2**	0	1	0	**1**	0	0	0	**0**	0	0	0	**0**	**3**	13		0	0	0	0
8:45	0	0	0	**0**	0	0	0	**0**	0	0	0	**0**	0	0	0	**0**	**0**	8		0	0	0	0
9:00	0	4	0	**4**	0	2	0	**2**	0	0	0	**0**	0	0	0	**0**	**6**	12		0	0	0	0
9:15	0	0	0	**0**	0	0	0	**0**	0	0	0	**0**	0	0	0	**0**	**0**	9		0	0	0	0
9:30	0	4	0	**4**	0	2	0	**2**	0	0	0	**0**	0	0	0	**0**	**6**	12		0	0	0	0
9:45	0	2	0	**2**	0	1	1	**2**	0	0	0	**0**	0	0	0	**0**	**4**	16		0	0	0	0
10:00	0	0	0	**0**	0	0	1	**1**	0	0	0	**0**	0	0	0	**0**	**1**	11		0	0	0	0
10:15	0	1	0	**1**	0	3	0	**3**	0	0	0	**0**	0	0	0	**0**	**4**	15		0	0	0	0
10:30	0	1	0	**1**	0	1	0	**1**	0	0	0	**0**	0	0	0	**0**	**2**	11		0	0	0	0
10:45	0	2	0	**2**	0	0	0	**0**	0	0	0	**0**	0	0	0	**0**	**2**	9		0	0	0	0
11:00	0	0	0	**0**	0	2	0	**2**	0	0	0	**0**	0	0	0	**0**	**2**	10	*	0	0	0	0
11:15	0	1	0	**1**	0	1	0	**1**	0	0	0	**0**	0	0	0	**0**	**2**	8	*	0	0	0	0
11:30	0	3	0	**3**	0	1	0	**1**	0	0	0	**0**	0	0	0	**0**	**4**	10	*	0	0	0	0
11:45	0	0	0	**0**	0	1	0	**1**	0	0	0	**0**	0	0	0	**0**	**1**	9	+	0	0	0	0
Total	0	26	0	**26**	0	20	2	**22**	0	0	0	**0**	1	0	0	**1**	**49**			0	0	0	0
12:00	0	2	0	**2**	0	1	0	**1**	0	0	0	**0**	0	0	0	**0**	**3**			0	0	0	0
12:15	0	3	0	**3**	0	0	0	**0**	0	0	0	**0**	0	0	0	**0**	**3**			0	0	0	0
12:30	0	0	0	**0**	0	0	0	**0**	0	0	0	**0**	0	0	0	**0**	**0**			0	0	0	0
12:45	0	1	0	**1**	0	3	0	**3**	0	0	0	**0**	0	0	0	**0**	**4**	10		0	0	0	0
13:00	0	0	0	**0**	0	0	0	**0**	0	0	0	**0**	0	0	0	**0**	**0**	7		0	0	0	0
13:15	0	3	0	**3**	0	1	0	**1**	0	0	0	**0**	0	0	0	**0**	**4**	8		0	0	0	0
13:30	0	0	0	**0**	0	0	0	**0**	0	0	0	**0**	0	0	0	**0**	**0**	8		0	0	0	0
13:45	0	1	0	**1**	0	4	0	**4**	0	0	0	**0**	0	0	0	**0**	**5**	9		0	0	0	0
14:00	0	1	0	**1**	0	3	0	**3**	0	0	0	**0**	0	1	0	**1**	**5**	14	*	0	0	0	0
14:15	0	1	0	**1**	0	0	0	**0**	0	0	0	**0**	0	0	0	**0**	**1**	11	*	0	0	0	0
14:30	0	3	0	**3**	0	0	0	**0**	0	0	0	**0**	0	0	0	**0**	**3**	14	*	0	0	0	0
14:45	0	2	0	**2**	0	3	1	**4**	0	0	0	**0**	0	0	0	**0**	**6**	15	+	0	0	0	0
n/a																							
n/a																							
n/a																							
n/a																							
Total	0	17	0	**17**	0	15	1	**16**	0	0	0	**0**	0	1	0	**1**	**34**			0	0	0	0
n/a																							
n/a																							
n/a																							
n/a																							
n/a																							
n/a																							
n/a																							
n/a																							
n/a																							
n/a																							
n/a																							
n/a																							
n/a																							
n/a																							
n/a																							
n/a																							
n/a																							
n/a																							
Total																							

AM Peak Period
Dump Trucks

3rd Avenue @ Redford Street
Thursday, September 28, 2017

Time Period Begins	Redford St NORTH Approach				Redford St SOUTH Approach				3rd Ave WEST Approach				3rd Ave EAST Approach				Total Volume		Peak					Conflict	
	Left	Thru	Right	Total	Left	Thru	Right	Total	Left	Thru	Right	Total	Left	Thru	Right	Total	15-min	Hour		N	S	W	E	15 min	Hr
7:00	0	0	0	0	0	0	0	0	0	0	0	0	0	0	0	0	0			0	0	0	0	0	
7:15	0	1	0	1	0	0	0	0	0	0	0	0	0	0	0	0	1			0	0	0	0	1	
7:30	0	0	0	0	0	0	0	0	0	0	0	0	1	0	0	1	1			0	0	0	0	1	
7:45	0	2	0	2	0	3	0	3	0	0	0	0	0	0	0	0	5	7		0	0	0	0	3	5
8:00	0	2	0	2	0	0	0	0	0	0	0	0	0	0	0	0	2	9		0	0	0	0	2	7
8:15	0	1	0	1	0	2	0	2	0	0	0	0	0	0	0	0	3	11		0	0	0	0	2	8
8:30	0	2	0	2	0	1	0	1	0	0	0	0	0	0	0	0	3	13		0	0	0	0	2	9
8:45	0	0	0	0	0	0	0	0	0	0	0	0	0	0	0	0	0	8		0	0	0	0	0	6
9:00	0	4	0	4	0	2	0	2	0	0	0	0	0	0	0	0	6	12		0	0	0	0	4	8
9:15	0	0	0	0	0	0	0	0	0	0	0	0	0	0	0	0	0	9		0	0	0	0	0	6
9:30	0	4	0	4	0	2	0	2	0	0	0	0	0	0	0	0	6	12		0	0	0	0	4	8
9:45	0	2	0	2	0	1	1	2	0	0	0	0	0	0	0	0	4	16		0	0	0	0	2	10
10:00	0	0	0	0	0	0	1	1	0	0	0	0	0	0	0	0	1	11		0	0	0	0	1	7
10:15	0	1	0	1	0	3	0	3	0	0	0	0	0	0	0	0	4	15		0	0	0	0	3	10
10:30	0	1	0	1	0	1	0	1	0	0	0	0	0	0	0	0	2	11		0	0	0	0	1	7
10:45	0	2	0	2	0	0	0	0	0	0	0	0	0	0	0	0	2	9		0	0	0	0	2	7
11:00	0	0	0	0	0	2	0	2	0	0	0	0	0	0	0	0	2	10	*	0	0	0	0	2	8
11:15	0	1	0	1	0	1	0	1	0	0	0	0	0	0	0	0	2	8	*	0	0	0	0	1	6
11:30	0	3	0	3	0	1	0	1	0	0	0	0	0	0	0	0	4	10	*	0	0	0	0	3	8
11:45	0	0	0	0	0	1	0	1	0	0	0	0	0	0	0	0	1	9	+	0	0	0	0	1	7
Total	0	26	0	**26**	0	20	2	**22**	0	0	0	**0**	1	0	0	**1**	49			0	0	0	0		27
Avg Hr	0	5	0	**5**	0	4	0	**4**	0	0	0	**0**	0	0	0	**0**	10			0	0	0	0		

Peak hour of the intersection

Pk Hr	0	4	0	4	0	5	0	5	0	0	0	0	0	0	0	0	9	*		0	0	0	0		5
15x4	0	12	0	12	0	8	0	8	0	0	0	0	0	0	0	0	16	+		0	0	0	0		12
PHF	n/a	0.33	n/a	**0.33**	n/a	0.63	n/a	**0.63**	n/a	n/a	n/a	**n/a**	n/a	n/a	n/a	**n/a**	0.56			n/a	n/a	n/a	n/a		0.42

Peak hour of conflicting volumes for the intersection

Pk Hr	0	4	0	4	0	5	0	5	0	0	0	0	0	0	0	0	9	*		0	0	0	0		5
15x4	0	12	0	12	0	8	0	8	0	0	0	0	0	0	0	0	16	+		0	0	0	0		12
PHF	n/a	0.33	n/a	**0.33**	n/a	0.63	n/a	**0.63**	n/a	n/a	n/a	**n/a**	n/a	n/a	n/a	**n/a**	0.56			n/a	n/a	n/a	n/a		0.42

** Calculated peak hour occurs during the first or last hour of shift and therefore may be invalid. **

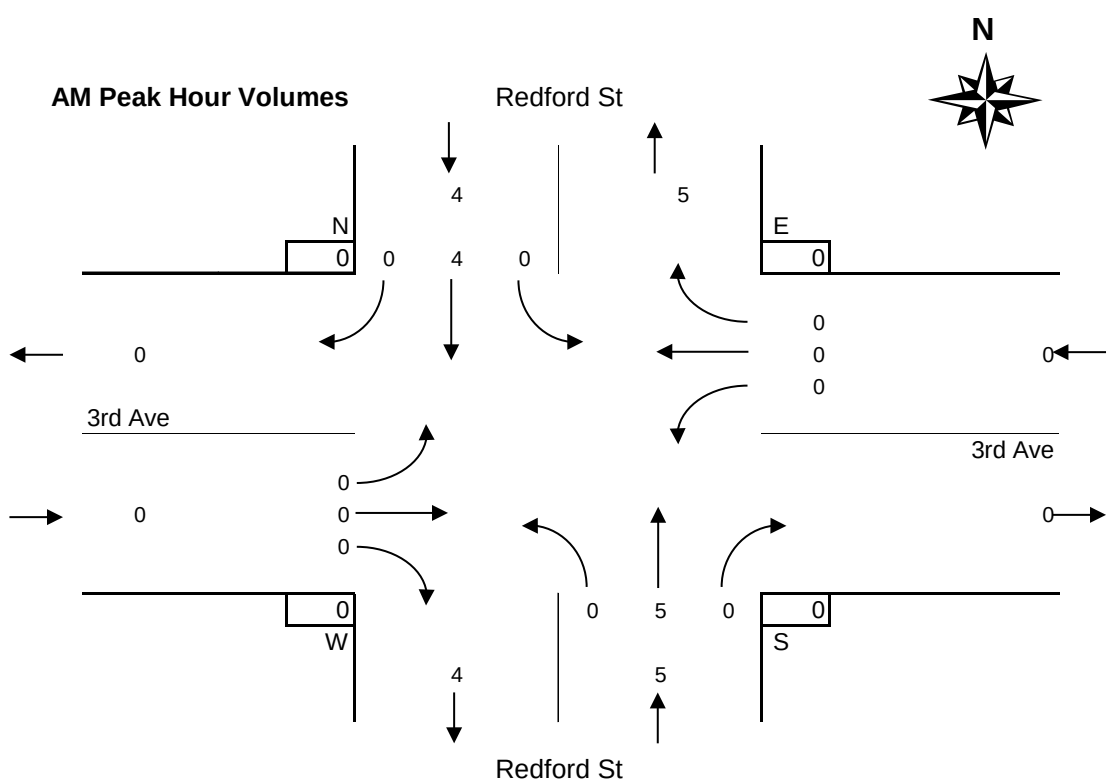

MD Peak Period
Dump Trucks

3rd Avenue @ Redford Street
Thursday, September 28, 2017

Time Period Begins	Redford St NORTH Approach				Redford St SOUTH Approach				3rd Ave WEST Approach				3rd Ave EAST Approach				Total Volume		Peak					Conflict	
	Left	Thru	Right	Total	Left	Thru	Right	Total	Left	Thru	Right	Total	Left	Thru	Right	Total	15-min	Hour		N	S	W	E	15 min	Hr
12:00	0	2	0	2	0	1	0	1	0	0	0	0	0	0	0	0	3			0	0	0	0	2	
12:15	0	3	0	3	0	0	0	0	0	0	0	0	0	0	0	0	3			0	0	0	0	3	
12:30	0	0	0	0	0	0	0	0	0	0	0	0	0	0	0	0	0			0	0	0	0	0	
12:45	0	1	0	1	0	3	0	3	0	0	0	0	0	0	0	0	4	10		0	0	0	0	3	8
13:00	0	0	0	0	0	0	0	0	0	0	0	0	0	0	0	0	0	7		0	0	0	0	0	6
13:15	0	3	0	3	0	1	0	1	0	0	0	0	0	0	0	0	4	8		0	0	0	0	3	6
13:30	0	0	0	0	0	0	0	0	0	0	0	0	0	0	0	0	0	8		0	0	0	0	0	6
13:45	0	1	0	1	0	4	0	4	0	0	0	0	0	0	0	0	5	9		0	0	0	0	4	7
14:00	0	1	0	1	0	3	0	3	0	0	0	0	0	1	0	1	5	14	*	0	0	0	0	4	11
14:15	0	1	0	1	0	0	0	0	0	0	0	0	0	0	0	0	1	11	*	0	0	0	0	1	9
14:30	0	3	0	3	0	0	0	0	0	0	0	0	0	0	0	0	3	14	*	0	0	0	0	3	12
14:45	0	2	0	2	0	3	1	4	0	0	0	0	0	0	0	0	6	15	+	0	0	0	0	4	12
n/a																									
n/a																									
n/a																									
n/a																									
Total	0	17	0	**17**	0	15	1	**16**	0	0	0	**0**	0	1	0	**1**	34			0	0	0	0		18
Avg Hr	0	6	0	**6**	0	5	0	**5**	0	0	0	**0**	0	0	0	**0**	11			0	0	0	0		

Peak hour of the intersection

Pk Hr	0	7	0	7	0	6	1	7	0	0	0	0	0	1	0	1	15	*		0	0	0	0		8
15x4	0	12	0	12	0	12	4	16	0	0	0	0	0	4	0	4	24	+		0	0	0	0		20
PHF	n/a	0.58	n/a	**0.58**	n/a	0.50	0.25	**0.44**	n/a	n/a	n/a	**n/a**	n/a	0.25	n/a	**0.25**	0.63			n/a	n/a	n/a	n/a		0.40

Peak hour of conflicting volumes for the intersection

Pk Hr	0	3	0	3	0	7	0	7	0	0	0	0	0	1	0	1	11	*		0	0	0	0		8
15x4	0	4	0	4	0	16	0	16	0	0	0	0	0	4	0	4	20	+		0	0	0	0		20
PHF	n/a	0.75	n/a	**0.75**	n/a	0.44	n/a	**0.44**	n/a	n/a	n/a	**n/a**	n/a	0.25	n/a	**0.25**	0.55			n/a	n/a	n/a	n/a		0.40

** Calculated peak hour occurs during the first or last hour of shift and therefore may be invalid. **

MD Peak Hour Volumes

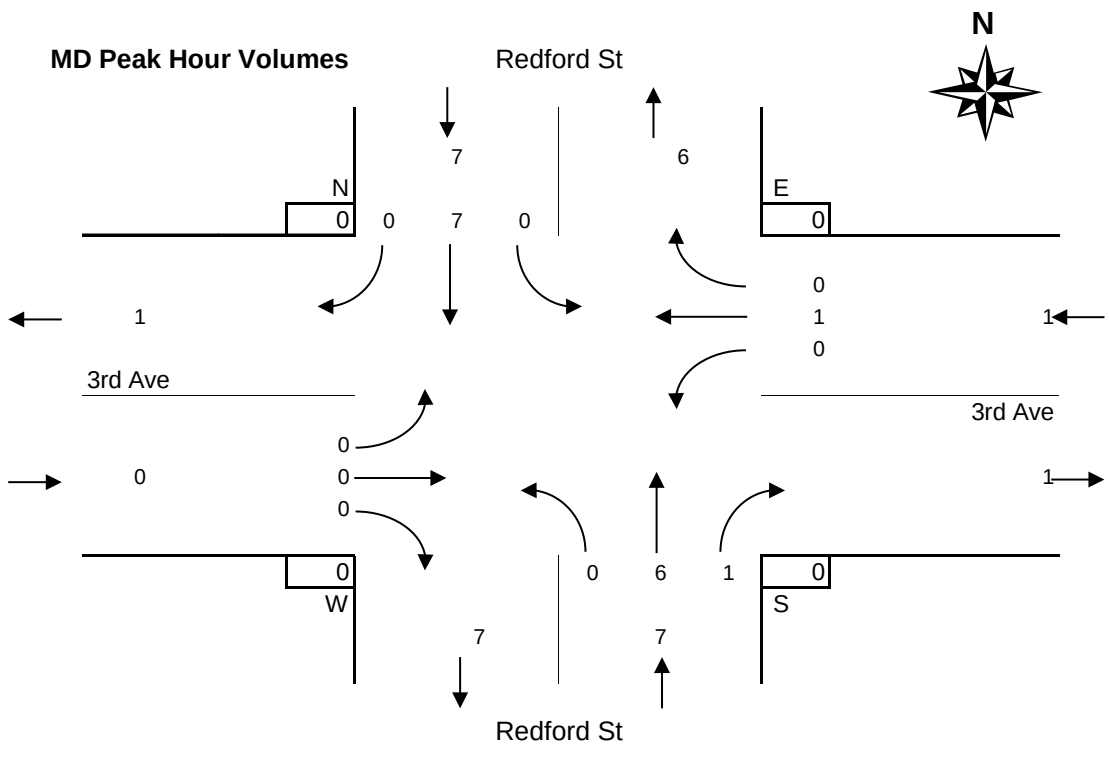

PM Peak Period
Dump Trucks

3rd Avenue @ Redford Street
Thursday, September 28, 2017

Time Period Begins	Redford St NORTH Approach				Redford St SOUTH Approach				3rd Ave WEST Approach				3rd Ave EAST Approach				Total Volume		Peak					Conflict	
	Left	Thru	Right	Total	Left	Thru	Right	Total	Left	Thru	Right	Total	Left	Thru	Right	Total	15-min	Hour		N	S	W	E	15 min	Hr
n/a																									
n/a																									
n/a																									
n/a																									
n/a																									
n/a																									
n/a																									
n/a																									
n/a																									
n/a																									
n/a																									
n/a																									
n/a																									
n/a																									
n/a																									
n/a																									
n/a																									
n/a																									
n/a																									
Total																									0
Avg Hr																									

Peak hour of the intersection

Pk Hr																		*							0
15x4																		+							0
PHF																									n/a

Peak hour of conflicting volumes for the intersection

Pk Hr																		*							0
15x4																		+							0
PHF																									n/a

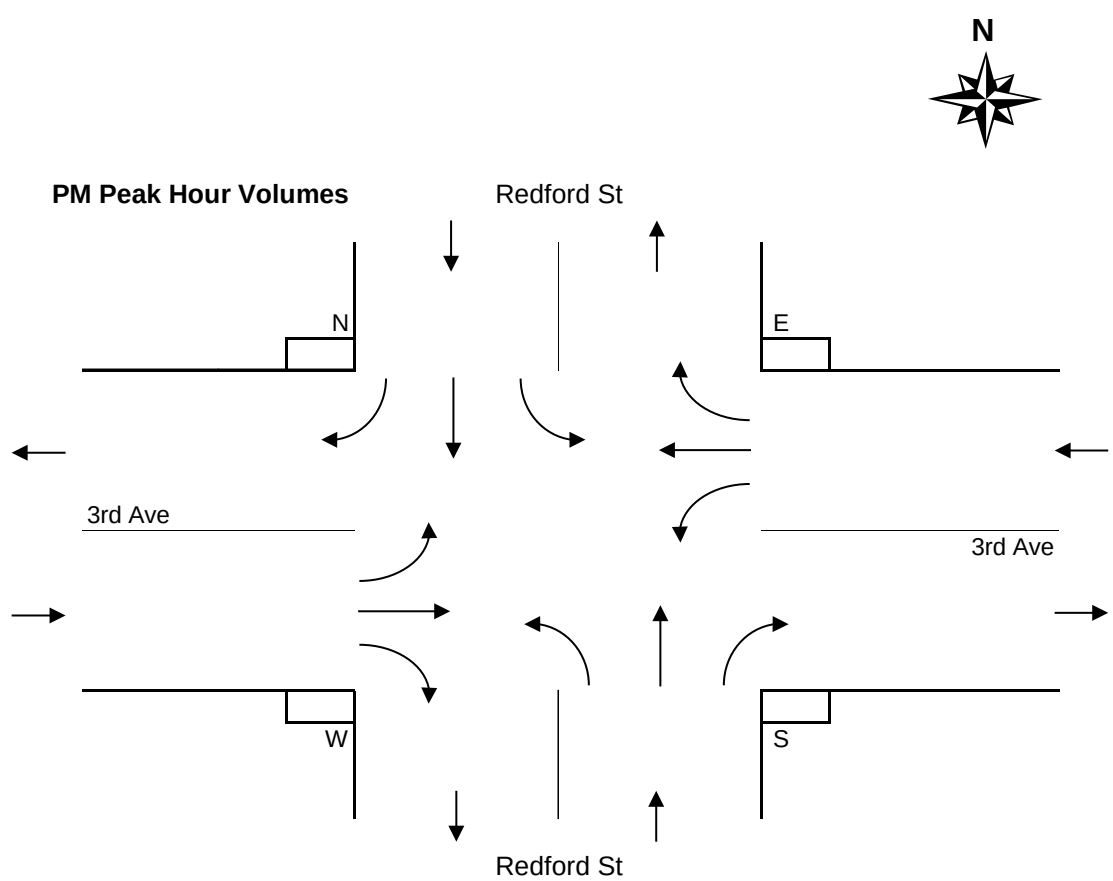

Period Hourly Averages
Dump Trucks

3rd Avenue @ Redford Street
Thursday, September 28, 2017

Entire Survey Period
8 Hours

	Redford St				Redford St				3rd Ave				3rd Ave							
	NORTH Approach				SOUTH Approach				WEST Approach				EAST Approach				Total			
	Left	Thru	Right	Total	Left	Thru	Right	Total	Left	Thru	Right	Total	Left	Thru	Right	Total	Volume	N	S	W	E
Total	0	43	0	**43**	0	35	3	**38**	0	0	0	**0**	1	1	0	**2**	83	0	0	0	0
Avg Hr	0	5	0	**5**	0	4	0	**5**	0	0	0	**0**	0	0	0	**0**	10	0	0	0	0

AM Peak Period
5 Hours

	Redford St				Redford St				3rd Ave				3rd Ave							
	NORTH Approach				SOUTH Approach				WEST Approach				EAST Approach				Total			
Totals	Left	Thru	Right	Total	Left	Thru	Right	Total	Left	Thru	Right	Total	Left	Thru	Right	Total	Volume	N	S	W	E
Period	0	26	0	**26**	0	20	2	**22**	0	0	0	**0**	1	0	0	**1**	49	0	0	0	0
Avg Hr	0	5	0	**5**	0	4	0	**4**	0	0	0	**0**	0	0	0	**0**	10	0	0	0	0

MD Peak Period
3 Hours

	Redford St				Redford St				3rd Ave				3rd Ave							
	NORTH Approach				SOUTH Approach				WEST Approach				EAST Approach				Total			
Totals	Left	Thru	Right	Total	Left	Thru	Right	Total	Left	Thru	Right	Total	Left	Thru	Right	Total	Volume	N	S	W	E
Total	0	17	0	**17**	0	15	1	**16**	0	0	0	**0**	0	1	0	**1**	34	0	0	0	0
Avg Hr	0	6	0	**6**	0	5	0	**5**	0	0	0	**0**	0	0	0	**0**	11	0	0	0	0

PM Peak Period
Hours

	Redford St				Redford St				3rd Ave				3rd Ave							
	NORTH Approach				SOUTH Approach				WEST Approach				EAST Approach				Total			
Totals	Left	Thru	Right	Total	Left	Thru	Right	Total	Left	Thru	Right	Total	Left	Thru	Right	Total	Volume	N	S	W	E
Total																				
Avg Hr																				

Average Hour Volumes

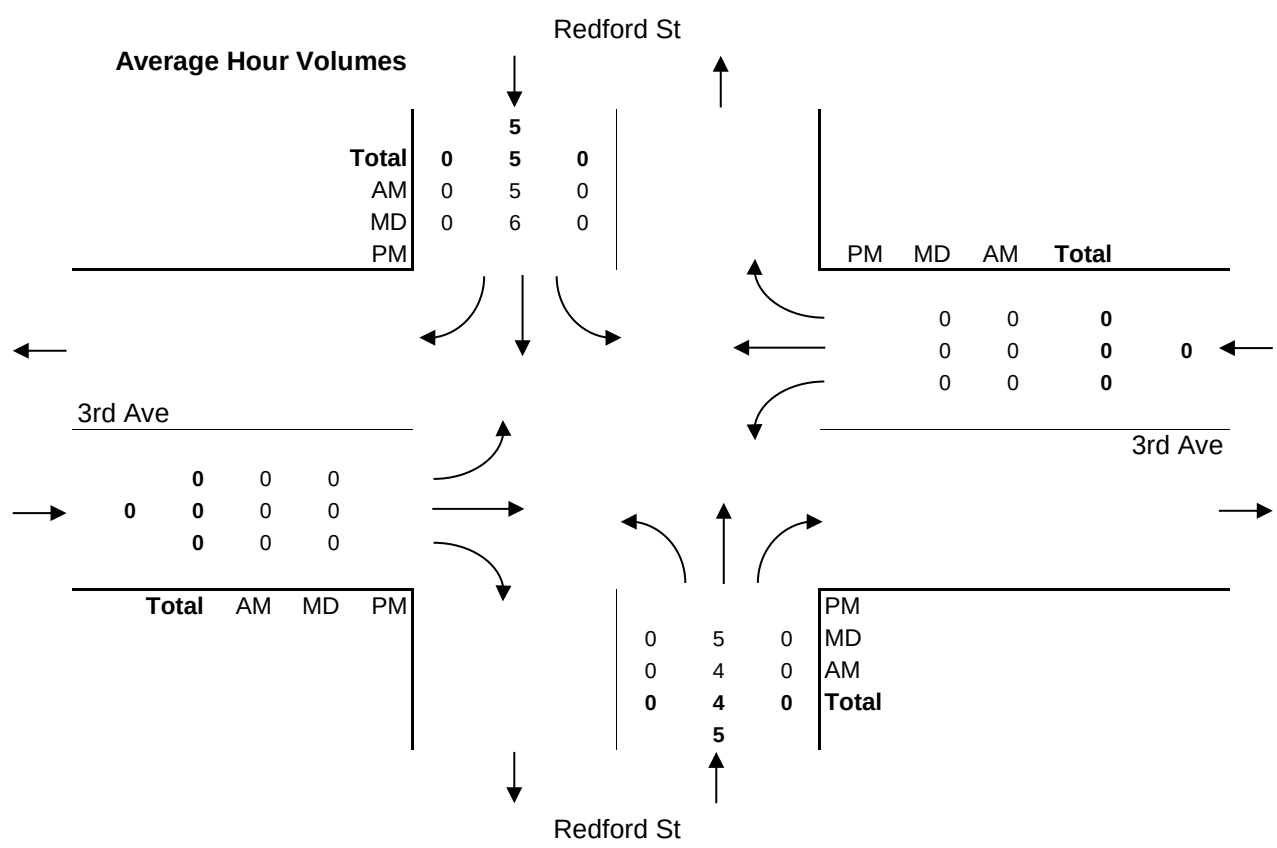

Vehicle Turning Movement Survey
With Classification

Major Route: 3rd Avenue
Minor Route: Redford Street
Municipality: Port Alberni
Filename: 1-3rd Ave @ Redford St-Sep 28, 2017.xlsx
Location #: 1

Date: September 28, 2017
Day-of-week: Thursday

East/West Route: 3rd Avenue
Intersection Type: 4-leg
Signalized?: Yes
Weather: Clear and dry

Vehicle Classifications: Regular Vehicles
Buses
Articulated Trucks
Cube Trucks
Dump Trucks
Emergency Trucks
Garbage Trucks
Logging Trucks
RVs
Utility Trucks

This data is for Emergency Trucks

Shift	Start	End	Duration
AM	7:00	12:00	5.00
MD	12:00	15:00	3.00
PM			
Total	**7:00**		**8.00**

Notes: 24-hour clock used for reporting (15-minute increments)
North Approach - southbound vehicles approaching intersection from the north
15x4 - 15 min volume (from maximum 15 minute period of movement/approach in peak hour period [*]) x 4
Pedestrians - N indicates pedestrians crossing north approach (east/west)

Comments:

Survey Data
Emergency Trucks

3rd Avenue @ Redford Street
Thursday, September 28, 2017

Time Period Begins	Redford St NORTH Approach				Redford St SOUTH Approach				3rd Ave WEST Approach				3rd Ave EAST Approach				Total Volume		Peak				
	Left	Thru	Right	Total	Left	Thru	Right	Total	Left	Thru	Right	Total	Left	Thru	Right	Total	15-min	Hour		N	S	W	E
7:00	0	0	0	**0**	0	0	0	**0**	0	0	0	**0**	0	0	0	**0**	**0**			0	0	0	0
7:15	0	0	0	**0**	0	0	0	**0**	0	0	0	**0**	0	0	0	**0**	**0**			0	0	0	0
7:30	0	0	0	**0**	0	0	0	**0**	0	0	0	**0**	0	0	0	**0**	**0**			0	0	0	0
7:45	0	0	0	**0**	0	0	0	**0**	0	0	0	**0**	0	0	0	**0**	**0**	0		0	0	0	0
8:00	0	0	0	**0**	0	0	0	**0**	0	0	0	**0**	0	0	0	**0**	**0**	0		0	0	0	0
8:15	0	0	0	**0**	0	0	0	**0**	0	0	0	**0**	0	0	0	**0**	**0**	0		0	0	0	0
8:30	0	0	0	**0**	0	0	0	**0**	0	0	0	**0**	0	0	0	**0**	**0**	0		0	0	0	0
8:45	0	0	0	**0**	0	0	0	**0**	0	0	0	**0**	0	0	0	**0**	**0**	0		0	0	0	0
9:00	0	0	0	**0**	0	0	0	**0**	0	0	0	**0**	0	0	0	**0**	**0**	0		0	0	0	0
9:15	0	0	0	**0**	0	0	0	**0**	0	0	0	**0**	0	0	0	**0**	**0**	0		0	0	0	0
9:30	0	0	0	**0**	0	0	0	**0**	0	0	0	**0**	0	0	0	**0**	**0**	0		0	0	0	0
9:45	0	0	0	**0**	0	0	0	**0**	0	0	0	**0**	0	0	0	**0**	**0**	0		0	0	0	0
10:00	0	0	0	**0**	0	0	0	**0**	0	0	0	**0**	0	0	0	**0**	**0**	0		0	0	0	0
10:15	0	0	0	**0**	0	0	0	**0**	0	0	0	**0**	0	0	0	**0**	**0**	0		0	0	0	0
10:30	0	0	0	**0**	0	0	0	**0**	0	0	0	**0**	0	0	0	**0**	**0**	0		0	0	0	0
10:45	0	0	0	**0**	0	0	0	**0**	0	0	0	**0**	0	0	0	**0**	**0**	0		0	0	0	0
11:00	0	0	0	**0**	0	0	0	**0**	0	0	0	**0**	0	0	0	**0**	**0**	0	*	0	0	0	0
11:15	0	0	0	**0**	0	0	0	**0**	0	0	0	**0**	0	0	0	**0**	**0**	0	*	0	0	0	0
11:30	0	0	0	**0**	0	0	0	**0**	0	0	0	**0**	0	0	0	**0**	**0**	0	*	0	0	0	0
11:45	0	0	0	**0**	0	0	0	**0**	0	0	0	**0**	0	0	0	**0**	**0**	0	+	0	0	0	0
Total	0	0	0	**0**	0	0	0	**0**	0	0	0	**0**	0	0	0	**0**	**0**			0	0	0	0
12:00	0	0	0	**0**	0	0	0	**0**	0	0	0	**0**	0	0	0	**0**	**0**			0	0	0	0
12:15	0	0	0	**0**	0	0	0	**0**	0	0	0	**0**	0	0	0	**0**	**0**			0	0	0	0
12:30	0	0	0	**0**	0	0	0	**0**	0	0	0	**0**	0	0	0	**0**	**0**			0	0	0	0
12:45	0	0	0	**0**	0	0	0	**0**	0	0	0	**0**	0	0	0	**0**	**0**	0		0	0	0	0
13:00	0	0	0	**0**	0	0	0	**0**	0	0	0	**0**	0	0	0	**0**	**0**	0		0	0	0	0
13:15	0	0	0	**0**	0	0	0	**0**	0	0	0	**0**	0	0	0	**0**	**0**	0		0	0	0	0
13:30	0	0	0	**0**	0	0	0	**0**	0	0	0	**0**	0	0	0	**0**	**0**	0		0	0	0	0
13:45	0	0	0	**0**	0	0	0	**0**	0	0	0	**0**	0	0	0	**0**	**0**	0		0	0	0	0
14:00	0	0	0	**0**	0	0	0	**0**	0	0	0	**0**	0	0	0	**0**	**0**	0	*	0	0	0	0
14:15	0	0	0	**0**	0	0	0	**0**	0	0	0	**0**	0	0	0	**0**	**0**	0	*	0	0	0	0
14:30	0	0	0	**0**	0	0	0	**0**	0	0	0	**0**	0	0	0	**0**	**0**	0	*	0	0	0	0
14:45	0	0	0	**0**	0	0	0	**0**	0	0	0	**0**	0	0	0	**0**	**0**	0	+	0	0	0	0
n/a																							
n/a																							
n/a																							
n/a																							
Total	0	0	0	**0**	0	0	0	**0**	0	0	0	**0**	0	0	0	**0**	**0**			0	0	0	0
n/a																							
n/a																							
n/a																							
n/a																							
n/a																							
n/a																							
n/a																							
n/a																							
n/a																							
n/a																							
n/a																							
n/a																							
n/a																							
n/a																							
n/a																							
n/a																							
n/a																							
n/a																							
Total																							

AM Peak Period
Emergency Trucks

3rd Avenue @ Redford Street
Thursday, September 28, 2017

Time Period Begins	Redford St NORTH Approach				Redford St SOUTH Approach				3rd Ave WEST Approach				3rd Ave EAST Approach				Total Volume		Peak					Conflict	
	Left	Thru	Right	Total	Left	Thru	Right	Total	Left	Thru	Right	Total	Left	Thru	Right	Total	15-min	Hour		N	S	W	E	15 min	Hr
7:00	0	0	0	0	0	0	0	0	0	0	0	0	0	0	0	0	0			0	0	0	0	0	
7:15	0	0	0	0	0	0	0	0	0	0	0	0	0	0	0	0	0			0	0	0	0	0	
7:30	0	0	0	0	0	0	0	0	0	0	0	0	0	0	0	0	0			0	0	0	0	0	
7:45	0	0	0	0	0	0	0	0	0	0	0	0	0	0	0	0	0	0		0	0	0	0	0	0
8:00	0	0	0	0	0	0	0	0	0	0	0	0	0	0	0	0	0	0		0	0	0	0	0	0
8:15	0	0	0	0	0	0	0	0	0	0	0	0	0	0	0	0	0	0		0	0	0	0	0	0
8:30	0	0	0	0	0	0	0	0	0	0	0	0	0	0	0	0	0	0		0	0	0	0	0	0
8:45	0	0	0	0	0	0	0	0	0	0	0	0	0	0	0	0	0	0		0	0	0	0	0	0
9:00	0	0	0	0	0	0	0	0	0	0	0	0	0	0	0	0	0	0		0	0	0	0	0	0
9:15	0	0	0	0	0	0	0	0	0	0	0	0	0	0	0	0	0	0		0	0	0	0	0	0
9:30	0	0	0	0	0	0	0	0	0	0	0	0	0	0	0	0	0	0		0	0	0	0	0	0
9:45	0	0	0	0	0	0	0	0	0	0	0	0	0	0	0	0	0	0		0	0	0	0	0	0
10:00	0	0	0	0	0	0	0	0	0	0	0	0	0	0	0	0	0	0		0	0	0	0	0	0
10:15	0	0	0	0	0	0	0	0	0	0	0	0	0	0	0	0	0	0		0	0	0	0	0	0
10:30	0	0	0	0	0	0	0	0	0	0	0	0	0	0	0	0	0	0		0	0	0	0	0	0
10:45	0	0	0	0	0	0	0	0	0	0	0	0	0	0	0	0	0	0		0	0	0	0	0	0
11:00	0	0	0	0	0	0	0	0	0	0	0	0	0	0	0	0	0	0	*	0	0	0	0	0	0
11:15	0	0	0	0	0	0	0	0	0	0	0	0	0	0	0	0	0	0	*	0	0	0	0	0	0
11:30	0	0	0	0	0	0	0	0	0	0	0	0	0	0	0	0	0	0	*	0	0	0	0	0	0
11:45	0	0	0	0	0	0	0	0	0	0	0	0	0	0	0	0	0	0	+	0	0	0	0	0	0
Total	0	0	0	**0**	0	0	0	**0**	0	0	0	**0**	0	0	0	**0**	0			0	0	0	0		0
Avg Hr	0	0	0	**0**	0	0	0	**0**	0	0	0	**0**	0	0	0	**0**	0			0	0	0	0		

Peak hour of the intersection

Pk Hr	0	0	0	0	0	0	0	0	0	0	0	0	0	0	0	0	0	*		0	0	0	0		0
15x4	0	0	0	0	0	0	0	0	0	0	0	0	0	0	0	0	0	+		0	0	0	0		0
PHF	n/a	n/a	n/a	**n/a**	n/a	n/a	n/a	**n/a**	n/a	n/a	n/a	**n/a**	n/a	n/a	n/a	**n/a**	n/a			n/a	n/a	n/a	n/a		n/a

Peak hour of conflicting volumes for the intersection

Pk Hr	0	0	0	0	0	0	0	0	0	0	0	0	0	0	0	0	0	*		0	0	0	0		0
15x4	0	0	0	0	0	0	0	0	0	0	0	0	0	0	0	0	0	+		0	0	0	0		0
PHF	n/a	n/a	n/a	**n/a**	n/a	n/a	n/a	**n/a**	n/a	n/a	n/a	**n/a**	n/a	n/a	n/a	**n/a**	n/a			n/a	n/a	n/a	n/a		n/a

** Calculated peak hour occurs during the first or last hour of shift and therefore may be invalid. **

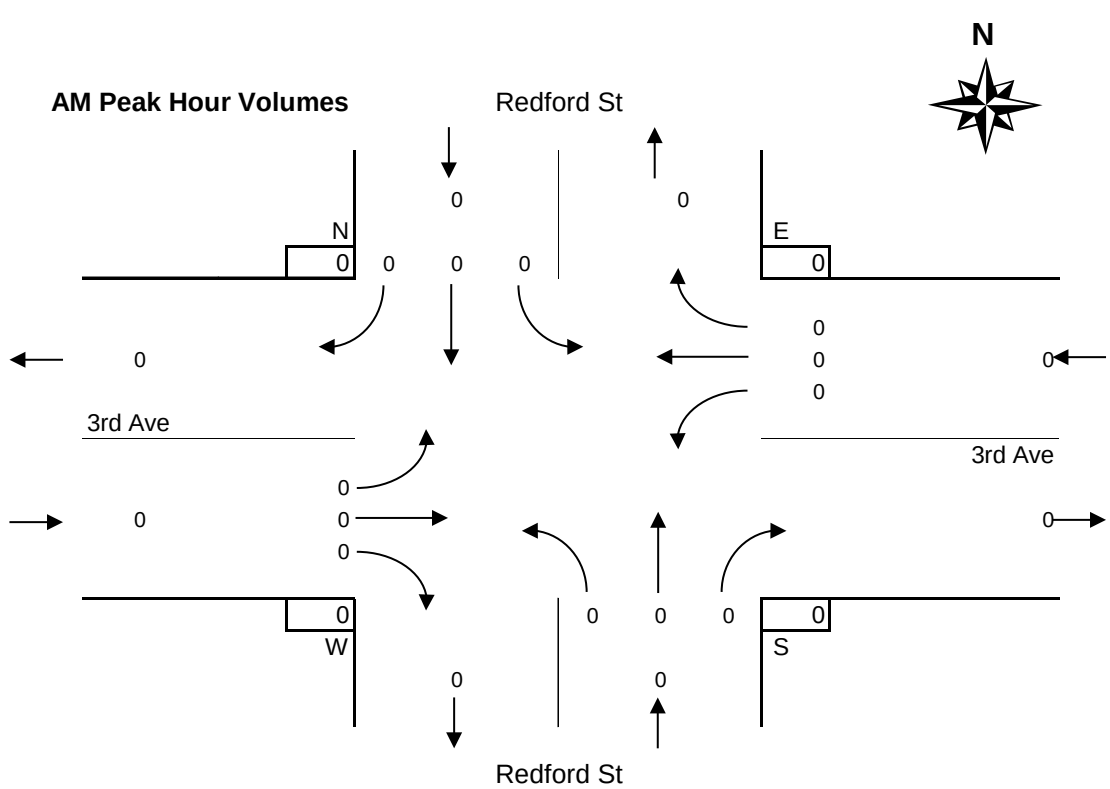

MD Peak Period
Emergency Trucks

3rd Avenue @ Redford Street
Thursday, September 28, 2017

Time Period Begins	Redford St NORTH Approach				Redford St SOUTH Approach				3rd Ave WEST Approach				3rd Ave EAST Approach				Total Volume		Peak					Conflict	
	Left	Thru	Right	Total	Left	Thru	Right	Total	Left	Thru	Right	Total	Left	Thru	Right	Total	15-min	Hour		N	S	W	E	15 min	Hr
12:00	0	0	0	0	0	0	0	0	0	0	0	0	0	0	0	0	0			0	0	0	0	0	
12:15	0	0	0	0	0	0	0	0	0	0	0	0	0	0	0	0	0			0	0	0	0	0	
12:30	0	0	0	0	0	0	0	0	0	0	0	0	0	0	0	0	0			0	0	0	0	0	
12:45	0	0	0	0	0	0	0	0	0	0	0	0	0	0	0	0	0	0		0	0	0	0	0	0
13:00	0	0	0	0	0	0	0	0	0	0	0	0	0	0	0	0	0	0		0	0	0	0	0	0
13:15	0	0	0	0	0	0	0	0	0	0	0	0	0	0	0	0	0	0		0	0	0	0	0	0
13:30	0	0	0	0	0	0	0	0	0	0	0	0	0	0	0	0	0	0		0	0	0	0	0	0
13:45	0	0	0	0	0	0	0	0	0	0	0	0	0	0	0	0	0	0		0	0	0	0	0	0
14:00	0	0	0	0	0	0	0	0	0	0	0	0	0	0	0	0	0	0	*	0	0	0	0	0	0
14:15	0	0	0	0	0	0	0	0	0	0	0	0	0	0	0	0	0	0	*	0	0	0	0	0	0
14:30	0	0	0	0	0	0	0	0	0	0	0	0	0	0	0	0	0	0	*	0	0	0	0	0	0
14:45	0	0	0	0	0	0	0	0	0	0	0	0	0	0	0	0	0	0	+	0	0	0	0	0	0
n/a																									
n/a																									
n/a																									
n/a																									
Total	0	0	0	**0**	0	0	0	**0**	0	0	0	**0**	0	0	0	**0**	0			0	0	0	0		0
Avg Hr	0	0	0	**0**	0	0	0	**0**	0	0	0	**0**	0	0	0	**0**	0			0	0	0	0		

Peak hour of the intersection

Pk Hr	0	0	0	0	0	0	0	0	0	0	0	0	0	0	0	0	0	*		0	0	0	0		0
15x4	0	0	0	0	0	0	0	0	0	0	0	0	0	0	0	0	0	+		0	0	0	0		0
PHF	n/a	n/a	n/a	**n/a**	n/a	n/a	n/a	**n/a**	n/a	n/a	n/a	**n/a**	n/a	n/a	n/a	**n/a**	n/a			n/a	n/a	n/a	n/a		n/a

Peak hour of conflicting volumes for the intersection

Pk Hr	0	0	0	0	0	0	0	0	0	0	0	0	0	0	0	0	0	*		0	0	0	0		0
15x4	0	0	0	0	0	0	0	0	0	0	0	0	0	0	0	0	0	+		0	0	0	0		0
PHF	n/a	n/a	n/a	**n/a**	n/a	n/a	n/a	**n/a**	n/a	n/a	n/a	**n/a**	n/a	n/a	n/a	**n/a**	n/a			n/a	n/a	n/a	n/a		n/a

** Calculated peak hour occurs during the first or last hour of shift and therefore may be invalid. **

MD Peak Hour Volumes

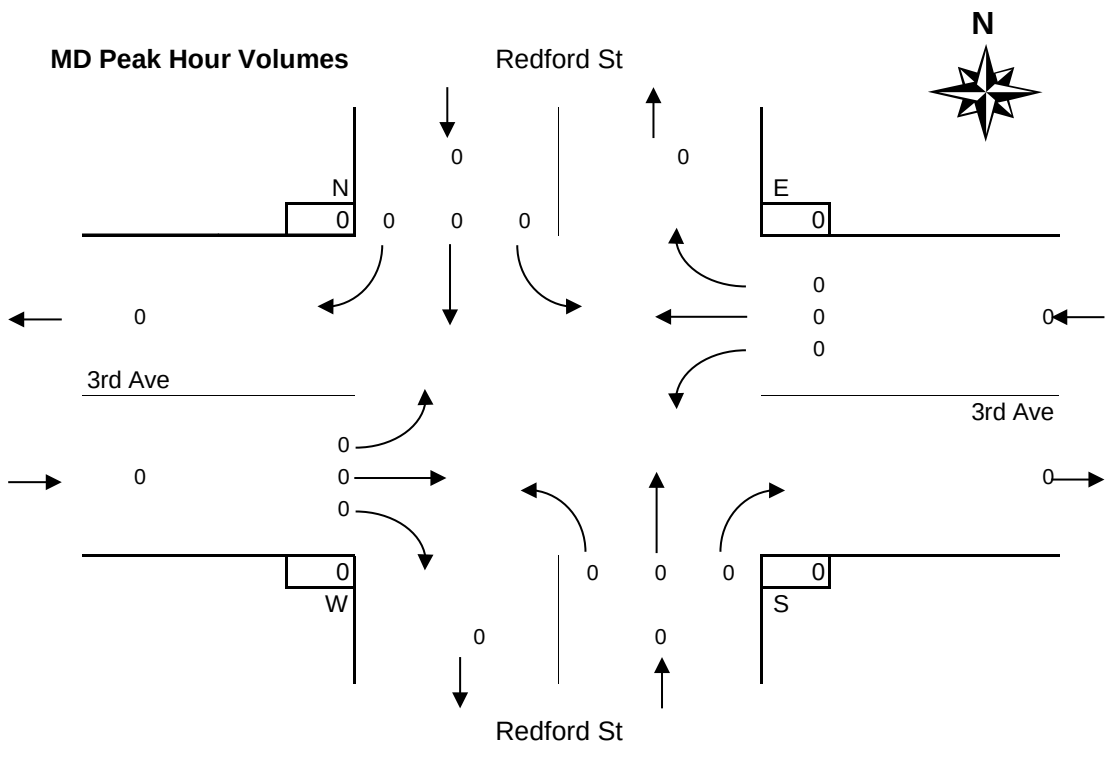

PM Peak Period
Emergency Trucks

3rd Avenue @ Redford Street
Thursday, September 28, 2017

Time Period Begins	Redford St NORTH Approach				Redford St SOUTH Approach				3rd Ave WEST Approach				3rd Ave EAST Approach				Total Volume		Peak					Conflict	
	Left	Thru	Right	Total	Left	Thru	Right	Total	Left	Thru	Right	Total	Left	Thru	Right	Total	15-min	Hour		N	S	W	E	15 min	Hr
n/a																									
n/a																									
n/a																									
n/a																									
n/a																									
n/a																									
n/a																									
n/a																									
n/a																									
n/a																									
n/a																									
n/a																									
n/a																									
n/a																									
n/a																									
n/a																									
n/a																									
n/a																									
n/a																									
Total																									0
Avg Hr																									

Peak hour of the intersection

Pk Hr																		*							0
15x4																		+							0
PHF																									n/a

Peak hour of conflicting volumes for the intersection

Pk Hr																		*							0
15x4																		+							0
PHF																									n/a

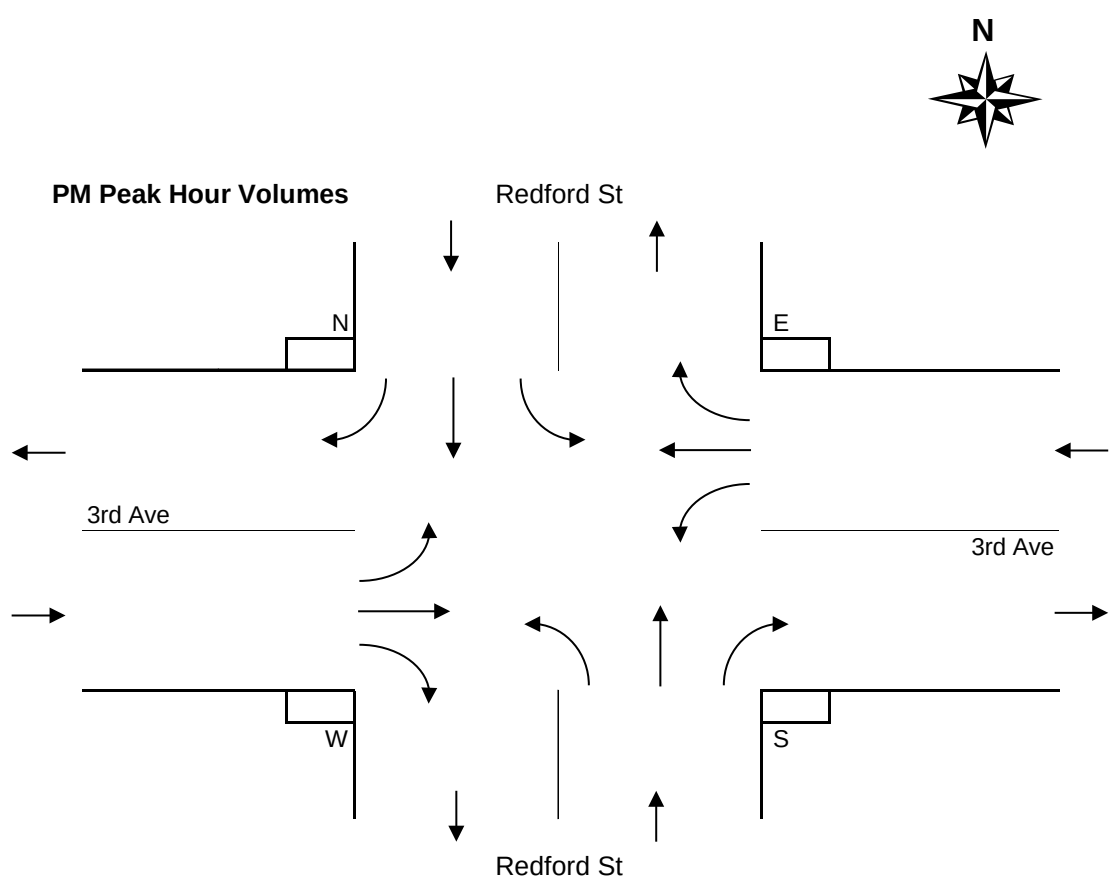

Period Hourly Averages
Emergency Trucks

3rd Avenue @ Redford Street
Thursday, September 28, 2017

Entire Survey Period

8 Hours

	Redford St				Redford St				3rd Ave				3rd Ave							
	NORTH Approach				SOUTH Approach				WEST Approach				EAST Approach				Total			
	Left	Thru	Right	Total	Left	Thru	Right	Total	Left	Thru	Right	Total	Left	Thru	Right	Total	Volume	N	S	W	E
Total	0	0	0	**0**	0	0	0	**0**	0	0	0	**0**	0	0	0	**0**	0	0	0	0	0
Avg Hr	0	0	0	**0**	0	0	0	**0**	0	0	0	**0**	0	0	0	**0**	0	0	0	0	0

AM Peak Period

5 Hours

	Redford St				Redford St				3rd Ave				3rd Ave							
	NORTH Approach				SOUTH Approach				WEST Approach				EAST Approach				Total			
Totals	Left	Thru	Right	Total	Left	Thru	Right	Total	Left	Thru	Right	Total	Left	Thru	Right	Total	Volume	N	S	W	E
Period	0	0	0	**0**	0	0	0	**0**	0	0	0	**0**	0	0	0	**0**	0	0	0	0	0
Avg Hr	0	0	0	**0**	0	0	0	**0**	0	0	0	**0**	0	0	0	**0**	0	0	0	0	0

MD Peak Period

3 Hours

	Redford St				Redford St				3rd Ave				3rd Ave							
	NORTH Approach				SOUTH Approach				WEST Approach				EAST Approach				Total			
Totals	Left	Thru	Right	Total	Left	Thru	Right	Total	Left	Thru	Right	Total	Left	Thru	Right	Total	Volume	N	S	W	E
Total	0	0	0	**0**	0	0	0	**0**	0	0	0	**0**	0	0	0	**0**	0	0	0	0	0
Avg Hr	0	0	0	**0**	0	0	0	**0**	0	0	0	**0**	0	0	0	**0**	0	0	0	0	0

PM Peak Period

Hours

	Redford St				Redford St				3rd Ave				3rd Ave							
	NORTH Approach				SOUTH Approach				WEST Approach				EAST Approach				Total			
Totals	Left	Thru	Right	Total	Left	Thru	Right	Total	Left	Thru	Right	Total	Left	Thru	Right	Total	Volume	N	S	W	E
Total																				
Avg Hr																				

Average Hour Volumes

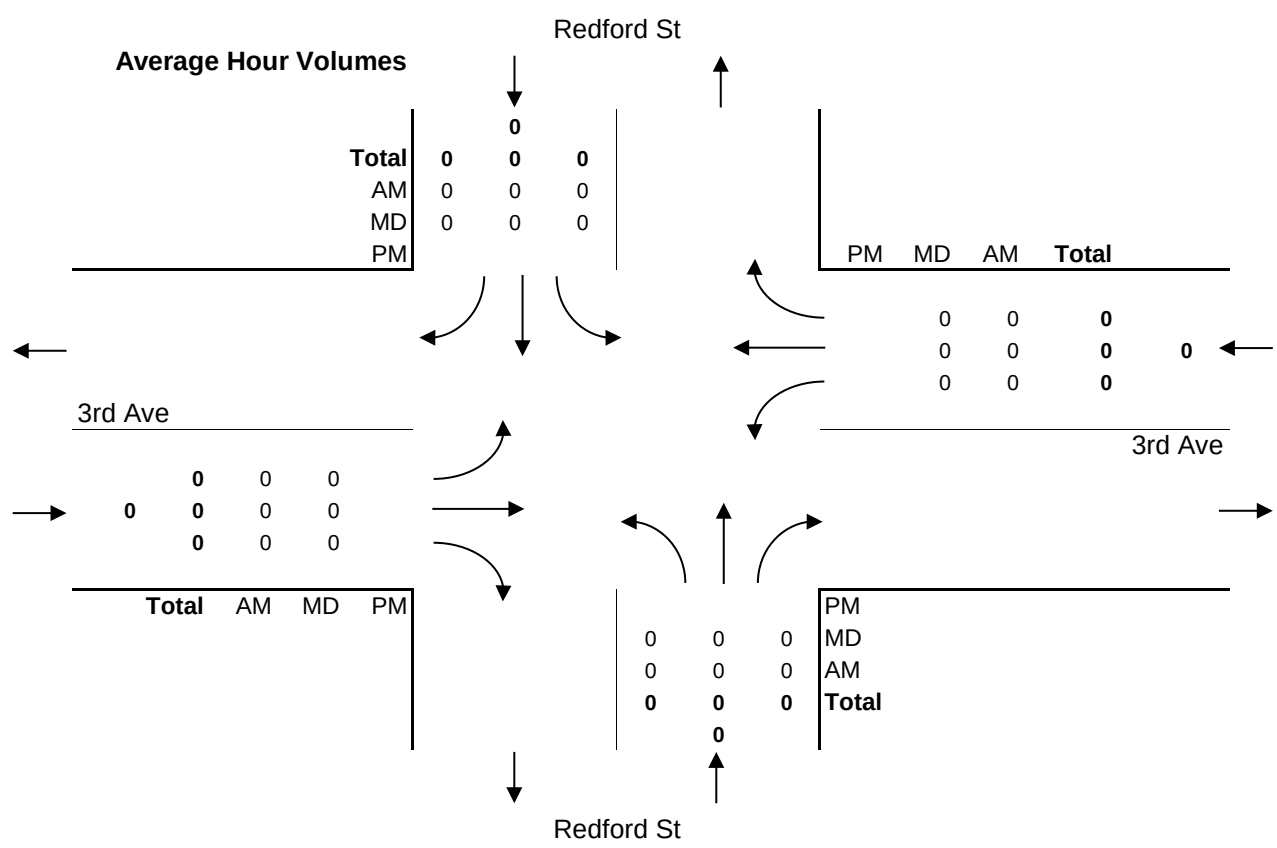

Major Route: 3rd Avenue
Minor Route: Redford Street
Municipality: Port Alberni
Filename: 1-3rd Ave @ Redford St-Sep 28, 2017.xlsx
Location #: 1

Date: September 28, 2017
Day-of-week: Thursday

East/West Route: 3rd Avenue
Intersection Type: 4-leg
Signalized?: Yes
Weather: Clear and dry

Vehicle Classifications: Regular Vehicles
Buses
Articulated Trucks
Cube Trucks
Dump Trucks
Emergency Trucks
Garbage Trucks
Logging Trucks
RVs
Utility Trucks

This data is for Garbage Trucks

Shift	Start	End	Duration
AM	7:00	12:00	5.00
MD	12:00	15:00	3.00
PM			
Total	**7:00**		**8.00**

Notes: 24-hour clock used for reporting (15-minute increments)
North Approach - southbound vehicles approaching intersection from the north
15x4 - 15 min volume (from maximum 15 minute period of movement/approach in peak hour period [*]) x 4
Pedestrians - N indicates pedestrians crossing north approach (east/west)

Comments:

Survey Data
Garbage Trucks

3rd Avenue @ Redford Street
Thursday, September 28, 2017

Time Period Begins	Redford St NORTH Approach				Redford St SOUTH Approach				3rd Ave WEST Approach				3rd Ave EAST Approach				Total Volume		Peak				
	Left	Thru	Right	Total	Left	Thru	Right	Total	Left	Thru	Right	Total	Left	Thru	Right	Total	15-min	Hour		N	S	W	E
7:00	0	0	0	**0**	0	0	0	**0**	0	0	0	**0**	0	0	0	**0**	**0**			0	0	0	0
7:15	0	0	0	**0**	0	0	0	**0**	0	0	0	**0**	0	0	0	**0**	**0**			0	0	0	0
7:30	1	0	0	**1**	0	0	0	**0**	0	0	0	**0**	2	0	0	**2**	**3**			0	0	0	0
7:45	0	0	0	**0**	0	0	0	**0**	0	0	0	**0**	0	0	0	**0**	**0**	3		0	0	0	0
8:00	0	0	0	**0**	0	0	0	**0**	0	0	0	**0**	0	0	0	**0**	**0**	3		0	0	0	0
8:15	0	0	0	**0**	0	0	0	**0**	0	0	0	**0**	0	0	0	**0**	**0**	3		0	0	0	0
8:30	0	0	0	**0**	0	0	0	**0**	0	0	0	**0**	0	0	0	**0**	**0**	0		0	0	0	0
8:45	0	0	0	**0**	0	0	0	**0**	0	0	0	**0**	0	0	0	**0**	**0**	0		0	0	0	0
9:00	0	0	0	**0**	0	0	0	**0**	0	0	0	**0**	0	0	0	**0**	**0**	0		0	0	0	0
9:15	0	0	0	**0**	0	1	0	**1**	0	0	0	**0**	0	0	0	**0**	**1**	1		0	0	0	0
9:30	0	0	0	**0**	0	0	0	**0**	0	0	0	**0**	0	0	0	**0**	**0**	1		0	0	0	0
9:45	0	0	0	**0**	0	0	0	**0**	0	0	0	**0**	0	0	0	**0**	**0**	1		0	0	0	0
10:00	0	0	0	**0**	0	0	0	**0**	0	0	0	**0**	0	0	0	**0**	**0**	1		0	0	0	0
10:15	0	0	0	**0**	0	0	0	**0**	0	0	0	**0**	1	0	0	**1**	**1**	1		0	0	0	0
10:30	0	0	0	**0**	0	0	0	**0**	0	0	0	**0**	0	0	0	**0**	**0**	1		0	0	0	0
10:45	0	0	0	**0**	0	0	0	**0**	0	0	0	**0**	0	0	0	**0**	**0**	1		0	0	0	0
11:00	0	0	0	**0**	0	0	0	**0**	0	0	0	**0**	0	0	0	**0**	**0**	1	*	0	0	0	0
11:15	0	0	0	**0**	0	0	0	**0**	0	0	0	**0**	0	0	0	**0**	**0**	0	*	0	0	0	0
11:30	0	0	0	**0**	0	0	0	**0**	0	0	0	**0**	0	0	0	**0**	**0**	0	*	0	0	0	0
11:45	0	0	0	**0**	0	0	0	**0**	0	0	0	**0**	0	0	0	**0**	**0**	0	+	0	0	0	0
Total	1	0	0	**1**	0	1	0	**1**	0	0	0	**0**	3	0	0	**3**	**5**			0	0	0	0
12:00	0	0	0	**0**	0	0	0	**0**	0	0	0	**0**	0	0	0	**0**	**0**			0	0	0	0
12:15	0	0	0	**0**	0	1	0	**1**	0	0	0	**0**	0	0	0	**0**	**1**			0	0	0	0
12:30	0	0	0	**0**	0	0	0	**0**	0	0	0	**0**	0	0	0	**0**	**0**			0	0	0	0
12:45	0	0	0	**0**	0	0	0	**0**	0	0	0	**0**	0	0	0	**0**	**0**	1		0	0	0	0
13:00	0	0	0	**0**	0	0	0	**0**	0	0	0	**0**	0	0	0	**0**	**0**	1		0	0	0	0
13:15	0	0	0	**0**	0	0	0	**0**	0	0	0	**0**	0	0	0	**0**	**0**	0		0	0	0	0
13:30	0	0	0	**0**	0	0	1	**1**	0	0	0	**0**	0	0	0	**0**	**1**	1		0	0	0	0
13:45	0	0	0	**0**	0	0	0	**0**	0	0	0	**0**	0	0	0	**0**	**0**	1		0	0	0	0
14:00	0	0	0	**0**	0	0	1	**1**	0	0	0	**0**	0	0	0	**0**	**1**	2	*	0	0	0	0
14:15	0	0	0	**0**	0	0	0	**0**	0	0	0	**0**	0	0	0	**0**	**0**	2	*	0	0	0	0
14:30	0	0	0	**0**	0	0	0	**0**	0	0	0	**0**	0	0	0	**0**	**0**	1	*	0	0	0	0
14:45	0	0	0	**0**	0	0	0	**0**	0	0	0	**0**	0	0	0	**0**	**0**	1	+	0	0	0	0
n/a																							
n/a																							
n/a																							
n/a																							
Total	0	0	0	**0**	0	1	2	**3**	0	0	0	**0**	0	0	0	**0**	**3**			0	0	0	0
n/a																							
n/a																							
n/a																							
n/a																							
n/a																							
n/a																							
n/a																							
n/a																							
n/a																							
n/a																							
n/a																							
n/a																							
n/a																							
n/a																							
n/a																							
n/a																							
n/a																							
n/a																							
Total																							

AM Peak Period
Garbage Trucks

3rd Avenue @ Redford Street
Thursday, September 28, 2017

Time Period Begins	Redford St NORTH Approach				Redford St SOUTH Approach				3rd Ave WEST Approach				3rd Ave EAST Approach				Total Volume		Peak					Conflict	
	Left	Thru	Right	Total	Left	Thru	Right	Total	Left	Thru	Right	Total	Left	Thru	Right	Total	15-min	Hour		N	S	W	E	15 min	Hr
7:00	0	0	0	0	0	0	0	0	0	0	0	0	0	0	0	0	0			0	0	0	0	0	
7:15	0	0	0	0	0	0	0	0	0	0	0	0	0	0	0	0	0			0	0	0	0	0	
7:30	1	0	0	1	0	0	0	0	0	0	0	0	2	0	0	2	3			0	0	0	0	3	
7:45	0	0	0	0	0	0	0	0	0	0	0	0	0	0	0	0	0	3		0	0	0	0	0	3
8:00	0	0	0	0	0	0	0	0	0	0	0	0	0	0	0	0	0	3		0	0	0	0	0	3
8:15	0	0	0	0	0	0	0	0	0	0	0	0	0	0	0	0	0	3		0	0	0	0	0	3
8:30	0	0	0	0	0	0	0	0	0	0	0	0	0	0	0	0	0	0		0	0	0	0	0	0
8:45	0	0	0	0	0	0	0	0	0	0	0	0	0	0	0	0	0	0		0	0	0	0	0	0
9:00	0	0	0	0	0	0	0	0	0	0	0	0	0	0	0	0	0	0		0	0	0	0	0	0
9:15	0	0	0	0	0	1	0	1	0	0	0	0	0	0	0	0	1	1		0	0	0	0	1	1
9:30	0	0	0	0	0	0	0	0	0	0	0	0	0	0	0	0	0	1		0	0	0	0	0	1
9:45	0	0	0	0	0	0	0	0	0	0	0	0	0	0	0	0	0	1		0	0	0	0	0	1
10:00	0	0	0	0	0	0	0	0	0	0	0	0	0	0	0	0	0	1		0	0	0	0	0	1
10:15	0	0	0	0	0	0	0	0	0	0	0	0	1	0	0	1	1	1		0	0	0	0	1	1
10:30	0	0	0	0	0	0	0	0	0	0	0	0	0	0	0	0	0	1		0	0	0	0	0	1
10:45	0	0	0	0	0	0	0	0	0	0	0	0	0	0	0	0	0	1		0	0	0	0	0	1
11:00	0	0	0	0	0	0	0	0	0	0	0	0	0	0	0	0	0	1	*	0	0	0	0	0	1
11:15	0	0	0	0	0	0	0	0	0	0	0	0	0	0	0	0	0	0	*	0	0	0	0	0	0
11:30	0	0	0	0	0	0	0	0	0	0	0	0	0	0	0	0	0	0	*	0	0	0	0	0	0
11:45	0	0	0	0	0	0	0	0	0	0	0	0	0	0	0	0	0	0	+	0	0	0	0	0	0
Total	1	0	0	**1**	0	1	0	**1**	0	0	0	**0**	3	0	0	**3**	5			0	0	0	0		5
Avg Hr	0	0	0	**0**	0	0	0	**0**	0	0	0	**0**	1	0	0	**1**	1			0	0	0	0		

Peak hour of the intersection

Pk Hr	0	0	0	0	0	0	0	0	0	0	0	0	0	0	0	0	0	*		0	0	0	0		0
15x4	0	0	0	0	0	0	0	0	0	0	0	0	0	0	0	0	0	+		0	0	0	0		0
PHF	n/a	n/a	n/a	**n/a**	n/a	n/a	n/a	**n/a**	n/a	n/a	n/a	**n/a**	n/a	n/a	n/a	**n/a**	n/a			n/a	n/a	n/a	n/a		n/a

Peak hour of conflicting volumes for the intersection

Pk Hr	0	0	0	0	0	0	0	0	0	0	0	0	0	0	0	0	0	*		0	0	0	0		0
15x4	0	0	0	0	0	0	0	0	0	0	0	0	0	0	0	0	0	+		0	0	0	0		0
PHF	n/a	n/a	n/a	**n/a**	n/a	n/a	n/a	**n/a**	n/a	n/a	n/a	**n/a**	n/a	n/a	n/a	**n/a**	n/a			n/a	n/a	n/a	n/a		n/a

** Calculated peak hour occurs during the first or last hour of shift and therefore may be invalid. **

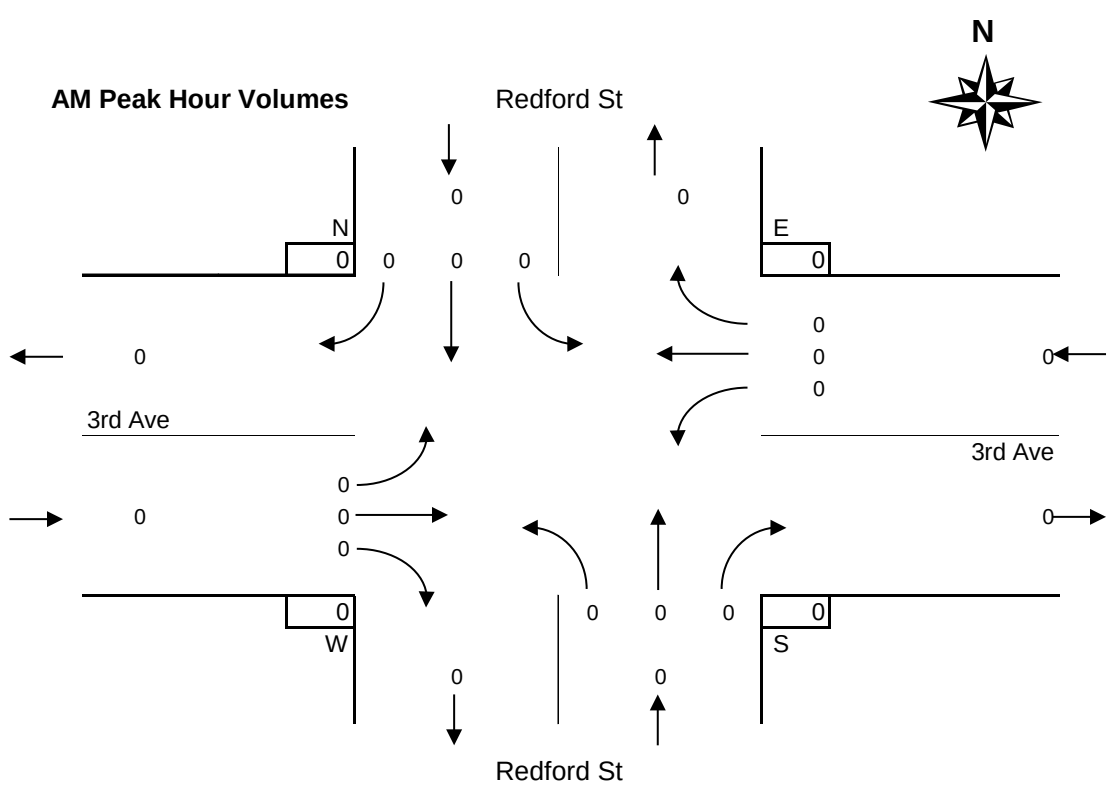

MD Peak Period
Garbage Trucks

3rd Avenue @ Redford Street
Thursday, September 28, 2017

Time Period Begins	Redford St NORTH Approach				Redford St SOUTH Approach				3rd Ave WEST Approach				3rd Ave EAST Approach				Total Volume		Peak					Conflict	
	Left	Thru	Right	Total	Left	Thru	Right	Total	Left	Thru	Right	Total	Left	Thru	Right	Total	15-min	Hour		N	S	W	E	15 min	Hr
12:00	0	0	0	0	0	0	0	0	0	0	0	0	0	0	0	0	0			0	0	0	0	0	
12:15	0	0	0	0	0	1	0	1	0	0	0	0	0	0	0	0	1			0	0	0	0	1	
12:30	0	0	0	0	0	0	0	0	0	0	0	0	0	0	0	0	0			0	0	0	0	0	
12:45	0	0	0	0	0	0	0	0	0	0	0	0	0	0	0	0	0	1		0	0	0	0	0	1
13:00	0	0	0	0	0	0	0	0	0	0	0	0	0	0	0	0	0	1		0	0	0	0	0	1
13:15	0	0	0	0	0	0	0	0	0	0	0	0	0	0	0	0	0	0		0	0	0	0	0	0
13:30	0	0	0	0	0	0	1	1	0	0	0	0	0	0	0	0	1	1		0	0	0	0	1	1
13:45	0	0	0	0	0	0	0	0	0	0	0	0	0	0	0	0	0	1		0	0	0	0	0	1
14:00	0	0	0	0	0	0	1	1	0	0	0	0	0	0	0	0	1	2	*	0	0	0	0	1	2
14:15	0	0	0	0	0	0	0	0	0	0	0	0	0	0	0	0	0	2	*	0	0	0	0	0	2
14:30	0	0	0	0	0	0	0	0	0	0	0	0	0	0	0	0	0	1	*	0	0	0	0	0	1
14:45	0	0	0	0	0	0	0	0	0	0	0	0	0	0	0	0	0	1	+	0	0	0	0	0	1
n/a																									
n/a																									
n/a																									
n/a																									
Total	0	0	0	**0**	0	1	2	**3**	0	0	0	**0**	0	0	0	**0**	3			0	0	0	0		3
Avg Hr	0	0	0	**0**	0	0	1	**1**	0	0	0	**0**	0	0	0	**0**	1			0	0	0	0		

Peak hour of the intersection

Pk Hr	0	0	0	0	0	0	1	1	0	0	0	0	0	0	0	0	1	*		0	0	0	0		1
15x4	0	0	0	0	0	0	4	4	0	0	0	0	0	0	0	0	4	+		0	0	0	0		4
PHF	n/a	n/a	n/a	**n/a**	n/a	n/a	0.25	**0.25**	n/a	n/a	n/a	**n/a**	n/a	n/a	n/a	**n/a**	0.25			n/a	n/a	n/a	n/a		0.25

Peak hour of conflicting volumes for the intersection

Pk Hr	0	0	0	0	0	0	2	2	0	0	0	0	0	0	0	0	2	*		0	0	0	0		2
15x4	0	0	0	0	0	0	4	4	0	0	0	0	0	0	0	0	4	+		0	0	0	0		4
PHF	n/a	n/a	n/a	**n/a**	n/a	n/a	0.50	**0.50**	n/a	n/a	n/a	**n/a**	n/a	n/a	n/a	**n/a**	0.50			n/a	n/a	n/a	n/a		0.50

** Calculated peak hour occurs during the first or last hour of shift and therefore may be invalid. **

MD Peak Hour Volumes

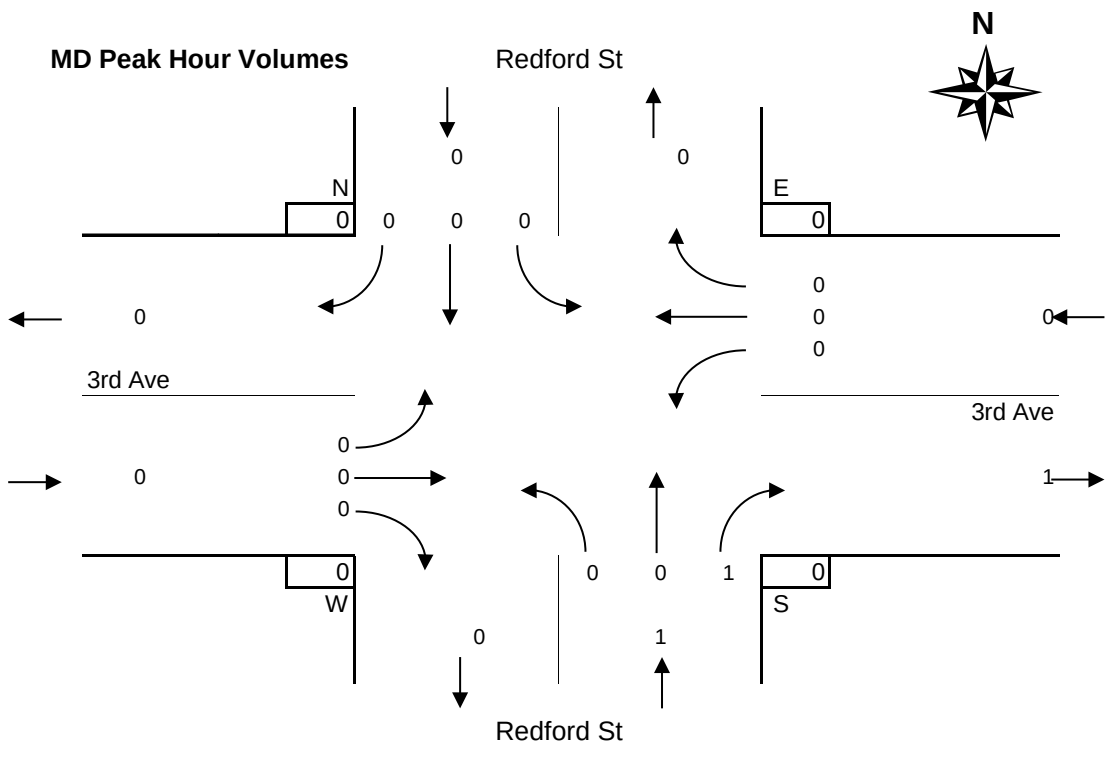

PM Peak Period
Garbage Trucks

3rd Avenue @ Redford Street
Thursday, September 28, 2017

Time Period Begins	Redford St NORTH Approach				Redford St SOUTH Approach				3rd Ave WEST Approach				3rd Ave EAST Approach				Total Volume		Peak					Conflict	
	Left	Thru	Right	Total	Left	Thru	Right	Total	Left	Thru	Right	Total	Left	Thru	Right	Total	15-min	Hour		N	S	W	E	15 min	Hr
n/a																									
n/a																									
n/a																									
n/a																									
n/a																									
n/a																									
n/a																									
n/a																									
n/a																									
n/a																									
n/a																									
n/a																									
n/a																									
n/a																									
n/a																									
n/a																									
n/a																									
n/a																									
n/a																									
Total																									0
Avg Hr																									

Peak hour of the intersection

Pk Hr																		*							0
15x4																		+							0
PHF																									n/a

Peak hour of conflicting volumes for the intersection

Pk Hr																		*							0
15x4																		+							0
PHF																									n/a

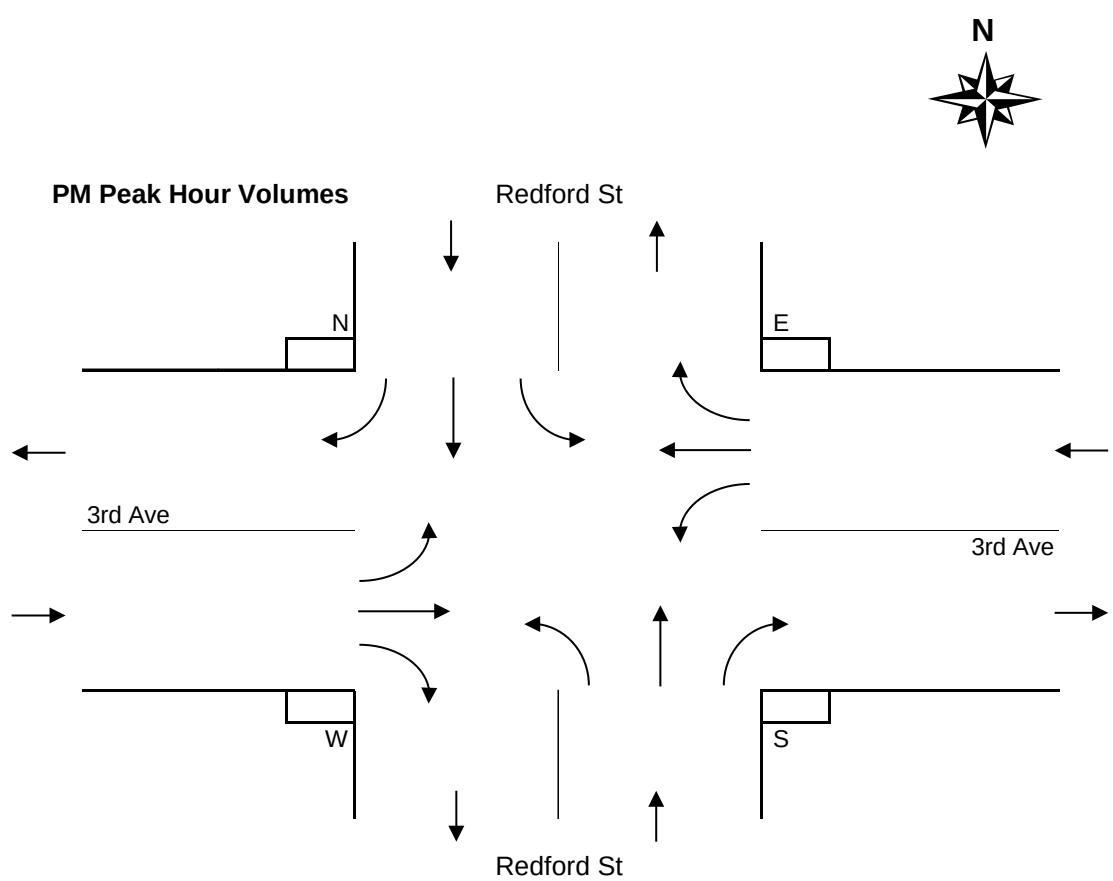

Period Hourly Averages
Garbage Trucks

3rd Avenue @ Redford Street
Thursday, September 28, 2017

Entire Survey Period

8 Hours

	Redford St				Redford St				3rd Ave				3rd Ave							
	NORTH Approach				SOUTH Approach				WEST Approach				EAST Approach				Total			
	Left	Thru	Right	Total	Left	Thru	Right	Total	Left	Thru	Right	Total	Left	Thru	Right	Total	Volume	N	S	W	E
Total	1	0	0	**1**	0	2	2	**4**	0	0	0	**0**	3	0	0	**3**	8	0	0	0	0
Avg Hr	0	0	0	**0**	0	0	0	**1**	0	0	0	**0**	0	0	0	**0**	1	0	0	0	0

AM Peak Period

5 Hours

	Redford St				Redford St				3rd Ave				3rd Ave							
	NORTH Approach				SOUTH Approach				WEST Approach				EAST Approach				Total			
Totals	Left	Thru	Right	Total	Left	Thru	Right	Total	Left	Thru	Right	Total	Left	Thru	Right	Total	Volume	N	S	W	E
Period	1	0	0	**1**	0	1	0	**1**	0	0	0	**0**	3	0	0	**3**	5	0	0	0	0
Avg Hr	0	0	0	**0**	0	0	0	**0**	0	0	0	**0**	1	0	0	**1**	1	0	0	0	0

MD Peak Period

3 Hours

	Redford St				Redford St				3rd Ave				3rd Ave							
	NORTH Approach				SOUTH Approach				WEST Approach				EAST Approach				Total			
Totals	Left	Thru	Right	Total	Left	Thru	Right	Total	Left	Thru	Right	Total	Left	Thru	Right	Total	Volume	N	S	W	E
Total	0	0	0	**0**	0	1	2	**3**	0	0	0	**0**	0	0	0	**0**	3	0	0	0	0
Avg Hr	0	0	0	**0**	0	0	1	**1**	0	0	0	**0**	0	0	0	**0**	1	0	0	0	0

PM Peak Period

Hours

	Redford St				Redford St				3rd Ave				3rd Ave							
	NORTH Approach				SOUTH Approach				WEST Approach				EAST Approach				Total			
Totals	Left	Thru	Right	Total	Left	Thru	Right	Total	Left	Thru	Right	Total	Left	Thru	Right	Total	Volume	N	S	W	E
Total																				
Avg Hr																				

Average Hour Volumes

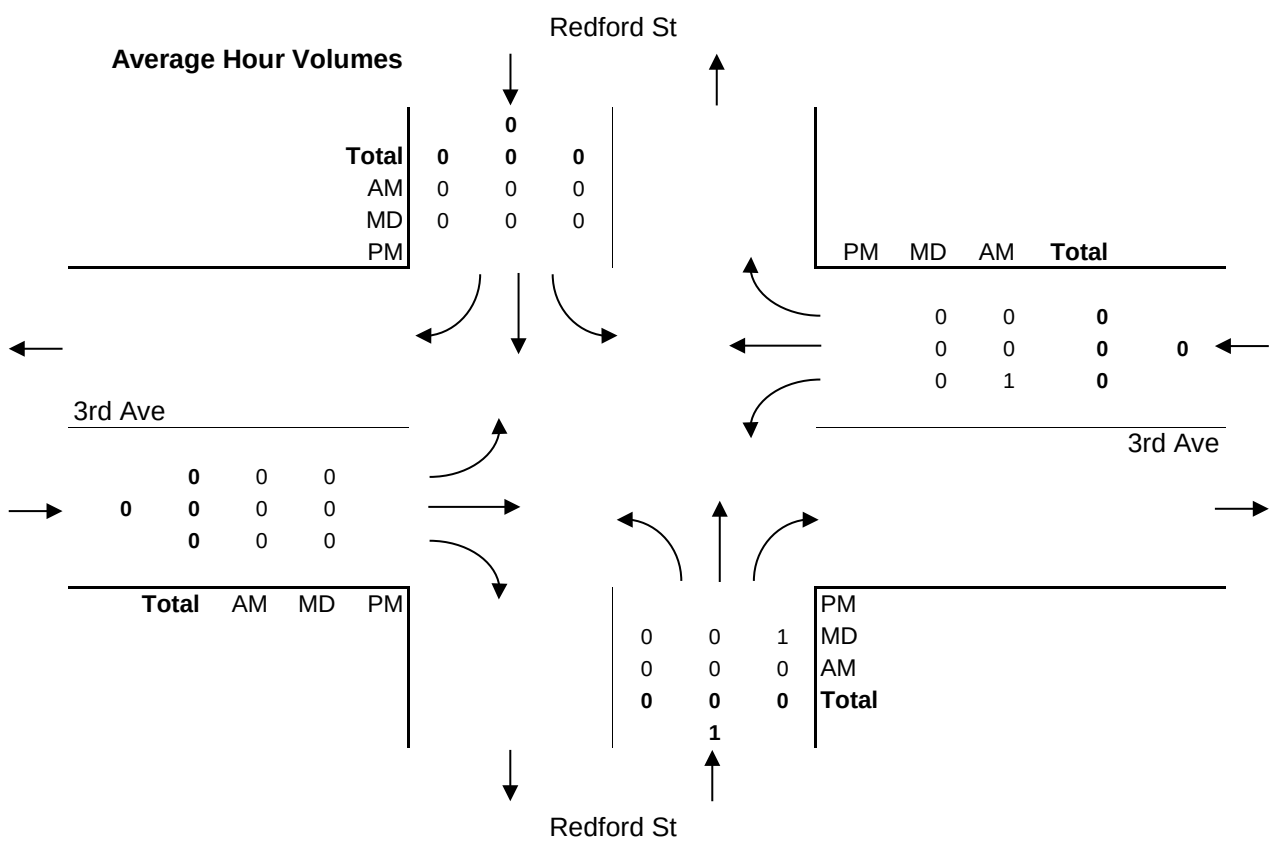

Vehicle Turning Movement Survey
With Classification

Major Route: 3rd Avenue
Minor Route: Redford Street
Municipality: Port Alberni
Filename: 1-3rd Ave @ Redford St-Sep 28, 2017.xlsx
Location #: 1

Date: September 28, 2017
Day-of-week: Thursday

East/West Route: 3rd Avenue
Intersection Type: 4-leg
Signalized?: Yes
Weather: Clear and dry

Vehicle Classifications: Regular Vehicles
Buses
Articulated Trucks
Cube Trucks
Dump Trucks
Emergency Trucks
Garbage Trucks
Logging Trucks
RVs
Utility Trucks

This data is for Logging Trucks

Shift	Start	End	Duration
AM	7:00	12:00	5.00
MD	12:00	15:00	3.00
PM			
Total	**7:00**		**8.00**

Notes: 24-hour clock used for reporting (15-minute increments)
North Approach - southbound vehicles approaching intersection from the north
15x4 - 15 min volume (from maximum 15 minute period of movement/approach in peak hour period [*]) x 4
Pedestrians - N indicates pedestrians crossing north approach (east/west)

Comments:

Survey Data
Logging Trucks

3rd Avenue @ Redford Street
Thursday, September 28, 2017

Time Period Begins	Redford St NORTH Approach				Redford St SOUTH Approach				3rd Ave WEST Approach				3rd Ave EAST Approach				Total Volume		Peak				
	Left	Thru	Right	Total	Left	Thru	Right	Total	Left	Thru	Right	Total	Left	Thru	Right	Total	15-min	Hour		N	S	W	E
7:00	0	1	0	**1**	0	1	0	**1**	0	0	0	**0**	0	0	0	**0**	**2**			0	0	0	0
7:15	0	3	0	**3**	0	0	0	**0**	0	0	0	**0**	0	0	0	**0**	**3**			0	0	0	0
7:30	0	0	0	**0**	0	2	0	**2**	0	0	0	**0**	0	0	0	**0**	**2**			0	0	0	0
7:45	0	0	0	**0**	0	1	0	**1**	0	0	0	**0**	0	0	0	**0**	**1**	8		0	0	0	0
8:00	0	3	0	**3**	0	1	0	**1**	0	0	0	**0**	0	0	0	**0**	**4**	10		0	0	0	0
8:15	0	1	0	**1**	0	1	0	**1**	0	0	0	**0**	0	0	0	**0**	**2**	9		0	0	0	0
8:30	0	1	0	**1**	0	0	0	**0**	0	0	0	**0**	0	0	0	**0**	**1**	8		0	0	0	0
8:45	0	0	0	**0**	0	1	0	**1**	0	0	0	**0**	0	0	0	**0**	**1**	8		0	0	0	0
9:00	0	1	0	**1**	0	0	0	**0**	0	0	0	**0**	0	0	0	**0**	**1**	5		0	0	0	0
9:15	0	0	0	**0**	0	2	0	**2**	0	0	0	**0**	0	0	0	**0**	**2**	5		0	0	0	0
9:30	0	2	0	**2**	0	2	0	**2**	0	0	0	**0**	0	0	0	**0**	**4**	8		0	0	0	0
9:45	0	0	0	**0**	0	1	0	**1**	0	0	0	**0**	0	0	0	**0**	**1**	8		0	0	0	0
10:00	0	0	0	**0**	0	0	0	**0**	0	0	0	**0**	0	0	0	**0**	**0**	7		0	0	0	0
10:15	0	1	0	**1**	0	1	0	**1**	0	0	0	**0**	0	0	0	**0**	**2**	7		0	0	0	0
10:30	0	2	0	**2**	0	2	0	**2**	0	0	0	**0**	0	0	0	**0**	**4**	7		0	0	0	0
10:45	0	1	0	**1**	0	0	0	**0**	0	0	0	**0**	0	0	0	**0**	**1**	7		0	0	0	0
11:00	0	1	0	**1**	0	0	0	**0**	0	0	0	**0**	0	0	0	**0**	**1**	8	*	0	0	0	0
11:15	0	1	0	**1**	0	1	0	**1**	0	0	0	**0**	0	0	0	**0**	**2**	8	*	0	0	0	0
11:30	0	0	0	**0**	0	1	0	**1**	0	0	0	**0**	0	0	0	**0**	**1**	5	*	0	0	0	0
11:45	0	0	0	**0**	0	0	0	**0**	0	0	0	**0**	0	0	0	**0**	**0**	4	+	0	0	0	0
Total	0	18	0	**18**	0	17	0	**17**	0	0	0	**0**	0	0	0	**0**	**35**			0	0	0	0
12:00	0	2	0	**2**	0	0	0	**0**	0	0	0	**0**	0	0	0	**0**	**2**			0	0	0	0
12:15	0	0	0	**0**	0	0	0	**0**	0	0	0	**0**	0	0	0	**0**	**0**			0	0	0	0
12:30	0	1	0	**1**	0	1	0	**1**	0	0	0	**0**	0	0	0	**0**	**2**			0	0	0	0
12:45	0	2	0	**2**	0	1	0	**1**	0	0	0	**0**	0	0	0	**0**	**3**	7		0	0	0	0
13:00	0	1	0	**1**	0	3	0	**3**	0	0	0	**0**	0	0	0	**0**	**4**	9		0	0	0	0
13:15	0	2	0	**2**	0	0	0	**0**	0	0	0	**0**	0	0	0	**0**	**2**	11		0	0	0	0
13:30	0	1	0	**1**	0	0	0	**0**	0	0	0	**0**	0	0	0	**0**	**1**	10		0	0	0	0
13:45	0	2	0	**2**	0	0	0	**0**	0	0	0	**0**	0	0	0	**0**	**2**	9		0	0	0	0
14:00	0	3	0	**3**	0	0	0	**0**	0	0	0	**0**	0	0	0	**0**	**3**	8	*	0	0	0	0
14:15	0	0	0	**0**	0	2	0	**2**	0	0	0	**0**	0	0	0	**0**	**2**	8	*	0	0	0	0
14:30	0	0	0	**0**	0	0	0	**0**	0	0	0	**0**	0	0	0	**0**	**0**	7	*	0	0	0	0
14:45	0	1	0	**1**	0	0	0	**0**	0	0	0	**0**	0	0	0	**0**	**1**	6	+	0	0	0	0
n/a																							
n/a																							
n/a																							
n/a																							
Total	0	15	0	**15**	0	7	0	**7**	0	0	0	**0**	0	0	0	**0**	**22**			0	0	0	0
n/a																							
n/a																							
n/a																							
n/a																							
n/a																							
n/a																							
n/a																							
n/a																							
n/a																							
n/a																							
n/a																							
n/a																							
n/a																							
n/a																							
n/a																							
n/a																							
n/a																							
n/a																							
Total																							

AM Peak Period
Logging Trucks

3rd Avenue @ Redford Street
Thursday, September 28, 2017

Time Period Begins	Redford St NORTH Approach				Redford St SOUTH Approach				3rd Ave WEST Approach				3rd Ave EAST Approach				Total Volume		Peak					Conflict	
	Left	Thru	Right	Total	Left	Thru	Right	Total	Left	Thru	Right	Total	Left	Thru	Right	Total	15-min	Hour		N	S	W	E	15 min	Hr
7:00	0	1	0	1	0	1	0	1	0	0	0	0	0	0	0	0	2			0	0	0	0	1	
7:15	0	3	0	3	0	0	0	0	0	0	0	0	0	0	0	0	3			0	0	0	0	3	
7:30	0	0	0	0	0	2	0	2	0	0	0	0	0	0	0	0	2			0	0	0	0	2	
7:45	0	0	0	0	0	1	0	1	0	0	0	0	0	0	0	0	1	8		0	0	0	0	1	7
8:00	0	3	0	3	0	1	0	1	0	0	0	0	0	0	0	0	4	10		0	0	0	0	3	9
8:15	0	1	0	1	0	1	0	1	0	0	0	0	0	0	0	0	2	9		0	0	0	0	1	7
8:30	0	1	0	1	0	0	0	0	0	0	0	0	0	0	0	0	1	8		0	0	0	0	1	6
8:45	0	0	0	0	0	1	0	1	0	0	0	0	0	0	0	0	1	8		0	0	0	0	1	6
9:00	0	1	0	1	0	0	0	0	0	0	0	0	0	0	0	0	1	5		0	0	0	0	1	4
9:15	0	0	0	0	0	2	0	2	0	0	0	0	0	0	0	0	2	5		0	0	0	0	2	5
9:30	0	2	0	2	0	2	0	2	0	0	0	0	0	0	0	0	4	8		0	0	0	0	2	6
9:45	0	0	0	0	0	1	0	1	0	0	0	0	0	0	0	0	1	8		0	0	0	0	1	6
10:00	0	0	0	0	0	0	0	0	0	0	0	0	0	0	0	0	0	7		0	0	0	0	0	5
10:15	0	1	0	1	0	1	0	1	0	0	0	0	0	0	0	0	2	7		0	0	0	0	1	4
10:30	0	2	0	2	0	2	0	2	0	0	0	0	0	0	0	0	4	7		0	0	0	0	2	4
10:45	0	1	0	1	0	0	0	0	0	0	0	0	0	0	0	0	1	7		0	0	0	0	1	4
11:00	0	1	0	1	0	0	0	0	0	0	0	0	0	0	0	0	1	8	*	0	0	0	0	1	5
11:15	0	1	0	1	0	1	0	1	0	0	0	0	0	0	0	0	2	8	*	0	0	0	0	1	5
11:30	0	0	0	0	0	1	0	1	0	0	0	0	0	0	0	0	1	5	*	0	0	0	0	1	4
11:45	0	0	0	0	0	0	0	0	0	0	0	0	0	0	0	0	0	4	+	0	0	0	0	0	3
Total	0	18	0	**18**	0	17	0	**17**	0	0	0	**0**	0	0	0	**0**	35			0	0	0	0		18
Avg Hr	0	4	0	**4**	0	3	0	**3**	0	0	0	**0**	0	0	0	**0**	7			0	0	0	0		

Peak hour of the intersection

Pk Hr	0	2	0	2	0	2	0	2	0	0	0	0	0	0	0	0	4	*		0	0	0	0		2
15x4	0	4	0	4	0	4	0	4	0	0	0	0	0	0	0	0	8	+		0	0	0	0		4
PHF	n/a	0.50	n/a	**0.50**	n/a	0.50	n/a	**0.50**	n/a	n/a	n/a	**n/a**	n/a	n/a	n/a	**n/a**	0.50			n/a	n/a	n/a	n/a		0.50

Peak hour of conflicting volumes for the intersection

Pk Hr	0	2	0	2	0	2	0	2	0	0	0	0	0	0	0	0	4	*		0	0	0	0		2
15x4	0	4	0	4	0	4	0	4	0	0	0	0	0	0	0	0	8	+		0	0	0	0		4
PHF	n/a	0.50	n/a	**0.50**	n/a	0.50	n/a	**0.50**	n/a	n/a	n/a	**n/a**	n/a	n/a	n/a	**n/a**	0.50			n/a	n/a	n/a	n/a		0.50

** Calculated peak hour occurs during the first or last hour of shift and therefore may be invalid. **

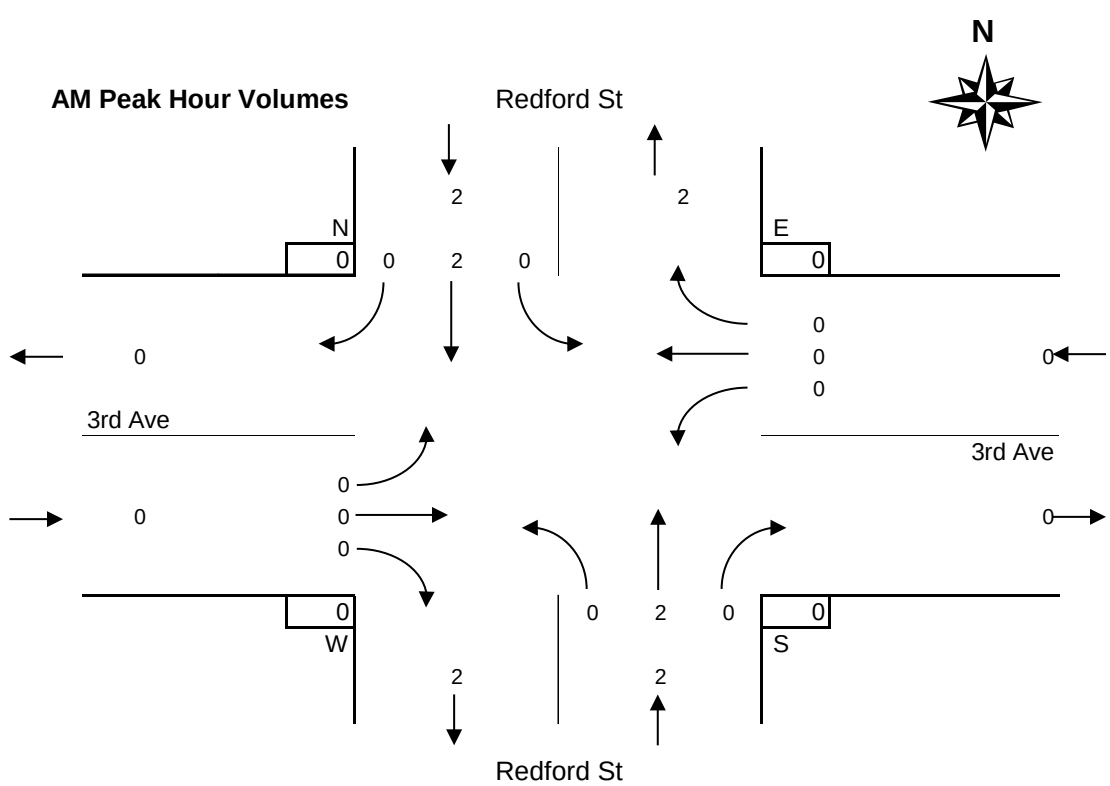

MD Peak Period
Logging Trucks

3rd Avenue @ Redford Street
Thursday, September 28, 2017

Time Period Begins	Redford St NORTH Approach				Redford St SOUTH Approach				3rd Ave WEST Approach				3rd Ave EAST Approach				Total Volume		Peak					Conflict	
	Left	Thru	Right	Total	Left	Thru	Right	Total	Left	Thru	Right	Total	Left	Thru	Right	Total	15-min	Hour		N	S	W	E	15 min	Hr
12:00	0	2	0	2	0	0	0	0	0	0	0	0	0	0	0	0	2			0	0	0	0	2	
12:15	0	0	0	0	0	0	0	0	0	0	0	0	0	0	0	0	0			0	0	0	0	0	
12:30	0	1	0	1	0	1	0	1	0	0	0	0	0	0	0	0	2			0	0	0	0	1	
12:45	0	2	0	2	0	1	0	1	0	0	0	0	0	0	0	0	3	7		0	0	0	0	2	5
13:00	0	1	0	1	0	3	0	3	0	0	0	0	0	0	0	0	4	9		0	0	0	0	3	6
13:15	0	2	0	2	0	0	0	0	0	0	0	0	0	0	0	0	2	11		0	0	0	0	2	8
13:30	0	1	0	1	0	0	0	0	0	0	0	0	0	0	0	0	1	10		0	0	0	0	1	8
13:45	0	2	0	2	0	0	0	0	0	0	0	0	0	0	0	0	2	9		0	0	0	0	2	8
14:00	0	3	0	3	0	0	0	0	0	0	0	0	0	0	0	0	3	8	*	0	0	0	0	3	8
14:15	0	0	0	0	0	2	0	2	0	0	0	0	0	0	0	0	2	8	*	0	0	0	0	2	8
14:30	0	0	0	0	0	0	0	0	0	0	0	0	0	0	0	0	0	7	*	0	0	0	0	0	7
14:45	0	1	0	1	0	0	0	0	0	0	0	0	0	0	0	0	1	6	+	0	0	0	0	1	6
n/a																									
n/a																									
n/a																									
n/a																									
Total	0	15	0	**15**	0	7	0	**7**	0	0	0	**0**	0	0	0	**0**	22			0	0	0	0		15
Avg Hr	0	5	0	**5**	0	2	0	**2**	0	0	0	**0**	0	0	0	**0**	7			0	0	0	0		

Peak hour of the intersection

Pk Hr	0	4	0	4	0	2	0	2	0	0	0	0	0	0	0	0	6	*		0	0	0	0		4
15x4	0	12	0	12	0	8	0	8	0	0	0	0	0	0	0	0	12	+		0	0	0	0		12
PHF	n/a	0.33	n/a	**0.33**	n/a	0.25	n/a	**0.25**	n/a	n/a	n/a	**n/a**	n/a	n/a	n/a	**n/a**	0.50			n/a	n/a	n/a	n/a		0.33

Peak hour of conflicting volumes for the intersection

Pk Hr	0	6	0	6	0	2	0	2	0	0	0	0	0	0	0	0	8	*		0	0	0	0		6
15x4	0	12	0	12	0	8	0	8	0	0	0	0	0	0	0	0	12	+		0	0	0	0		12
PHF	n/a	0.50	n/a	**0.50**	n/a	0.25	n/a	**0.25**	n/a	n/a	n/a	**n/a**	n/a	n/a	n/a	**n/a**	0.67			n/a	n/a	n/a	n/a		0.50

** Calculated peak hour occurs during the first or last hour of shift and therefore may be invalid. **

MD Peak Hour Volumes

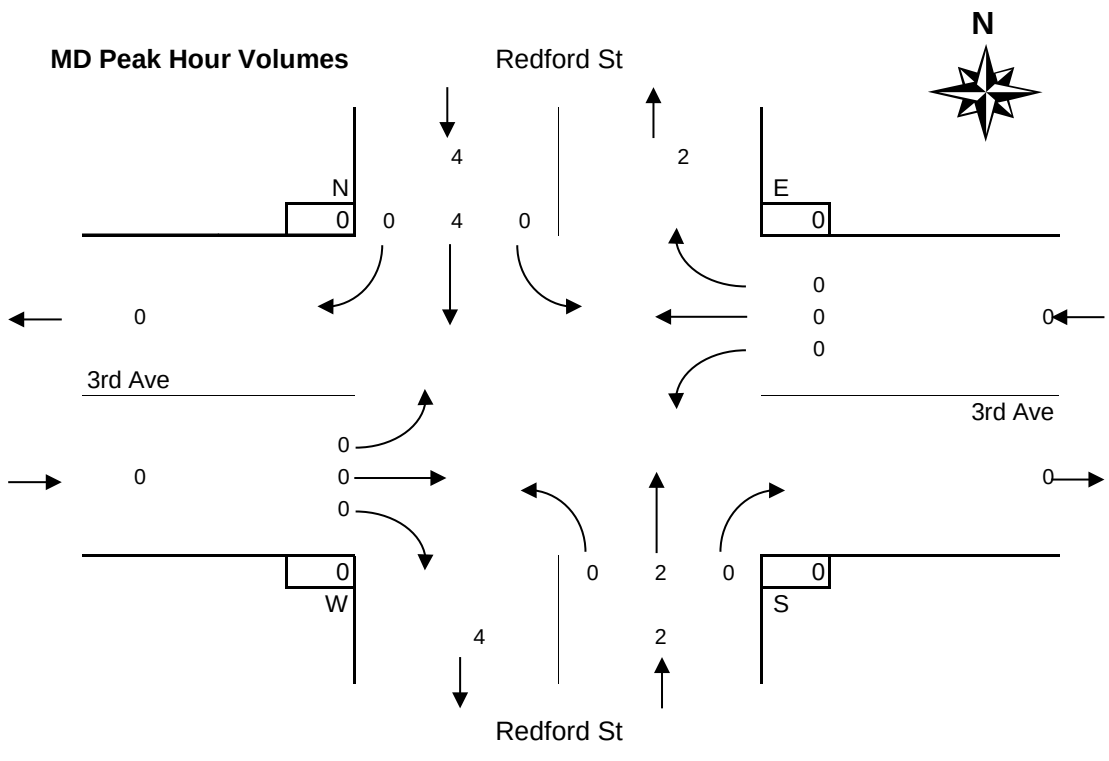

PM Peak Period
Logging Trucks

3rd Avenue @ Redford Street
Thursday, September 28, 2017

Time Period Begins	Redford St NORTH Approach				Redford St SOUTH Approach				3rd Ave WEST Approach				3rd Ave EAST Approach				Total Volume		Peak					Conflict	
	Left	Thru	Right	Total	Left	Thru	Right	Total	Left	Thru	Right	Total	Left	Thru	Right	Total	15-min	Hour		N	S	W	E	15 min	Hr
n/a																									
n/a																									
n/a																									
n/a																									
n/a																									
n/a																									
n/a																									
n/a																									
n/a																									
n/a																									
n/a																									
n/a																									
n/a																									
n/a																									
n/a																									
n/a																									
n/a																									
n/a																									
n/a																									
Total																									0
Avg Hr																									

Peak hour of the intersection

Pk Hr																		*							0
15x4																		+							0
PHF																									n/a

Peak hour of conflicting volumes for the intersection

Pk Hr																		*							0
15x4																		+							0
PHF																									n/a

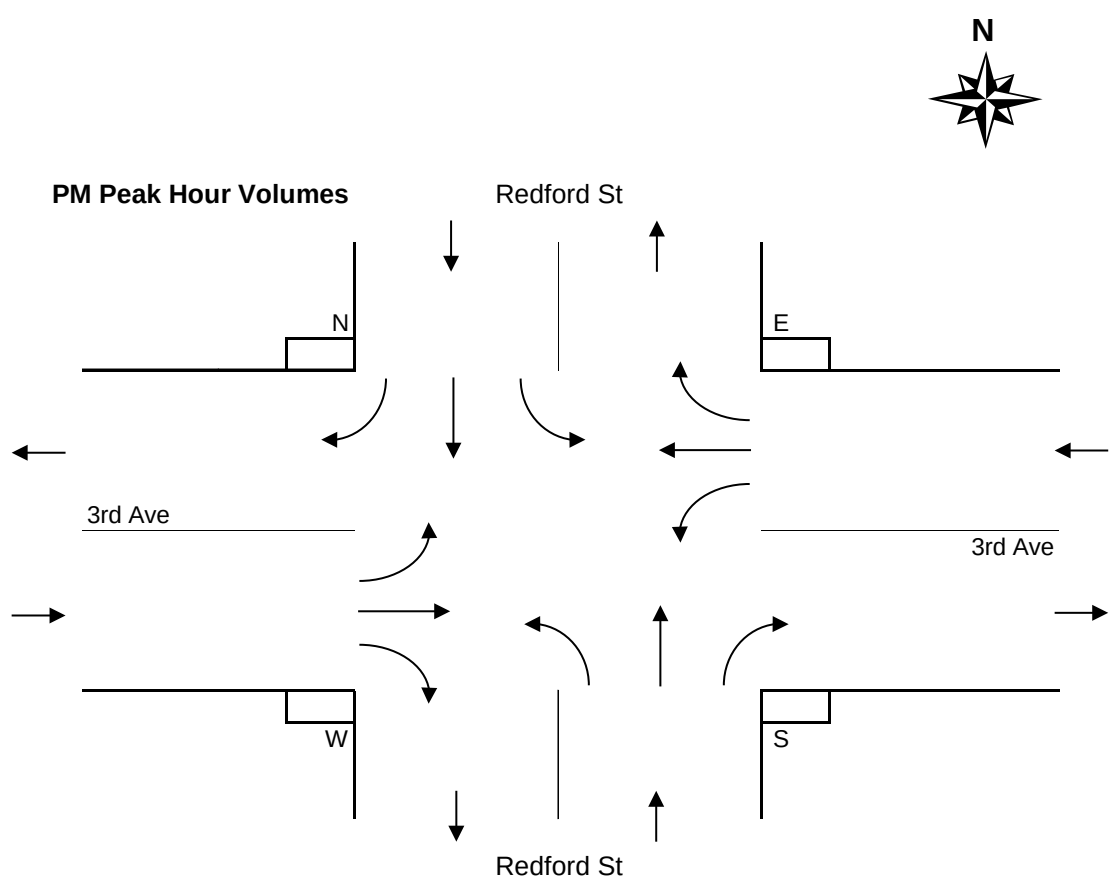

Period Hourly Averages
Logging Trucks

3rd Avenue @ Redford Street
Thursday, September 28, 2017

Entire Survey Period

8 Hours

	Redford St				Redford St				3rd Ave				3rd Ave							
	NORTH Approach				SOUTH Approach				WEST Approach				EAST Approach				Total			
	Left	Thru	Right	Total	Left	Thru	Right	Total	Left	Thru	Right	Total	Left	Thru	Right	Total	Volume	N	S	W	E
Total	0	33	0	**33**	0	24	0	**24**	0	0	0	**0**	0	0	0	**0**	57	0	0	0	0
Avg Hr	0	4	0	**4**	0	3	0	**3**	0	0	0	**0**	0	0	0	**0**	7	0	0	0	0

AM Peak Period

5 Hours

	Redford St				Redford St				3rd Ave				3rd Ave							
	NORTH Approach				SOUTH Approach				WEST Approach				EAST Approach				Total			
Totals	Left	Thru	Right	Total	Left	Thru	Right	Total	Left	Thru	Right	Total	Left	Thru	Right	Total	Volume	N	S	W	E
Period	0	18	0	**18**	0	17	0	**17**	0	0	0	**0**	0	0	0	**0**	35	0	0	0	0
Avg Hr	0	4	0	**4**	0	3	0	**3**	0	0	0	**0**	0	0	0	**0**	7	0	0	0	0

MD Peak Period

3 Hours

	Redford St				Redford St				3rd Ave				3rd Ave							
	NORTH Approach				SOUTH Approach				WEST Approach				EAST Approach				Total			
Totals	Left	Thru	Right	Total	Left	Thru	Right	Total	Left	Thru	Right	Total	Left	Thru	Right	Total	Volume	N	S	W	E
Total	0	15	0	**15**	0	7	0	**7**	0	0	0	**0**	0	0	0	**0**	22	0	0	0	0
Avg Hr	0	5	0	**5**	0	2	0	**2**	0	0	0	**0**	0	0	0	**0**	7	0	0	0	0

PM Peak Period

Hours

	Redford St				Redford St				3rd Ave				3rd Ave							
	NORTH Approach				SOUTH Approach				WEST Approach				EAST Approach				Total			
Totals	Left	Thru	Right	Total	Left	Thru	Right	Total	Left	Thru	Right	Total	Left	Thru	Right	Total	Volume	N	S	W	E
Total																				
Avg Hr																				

Average Hour Volumes

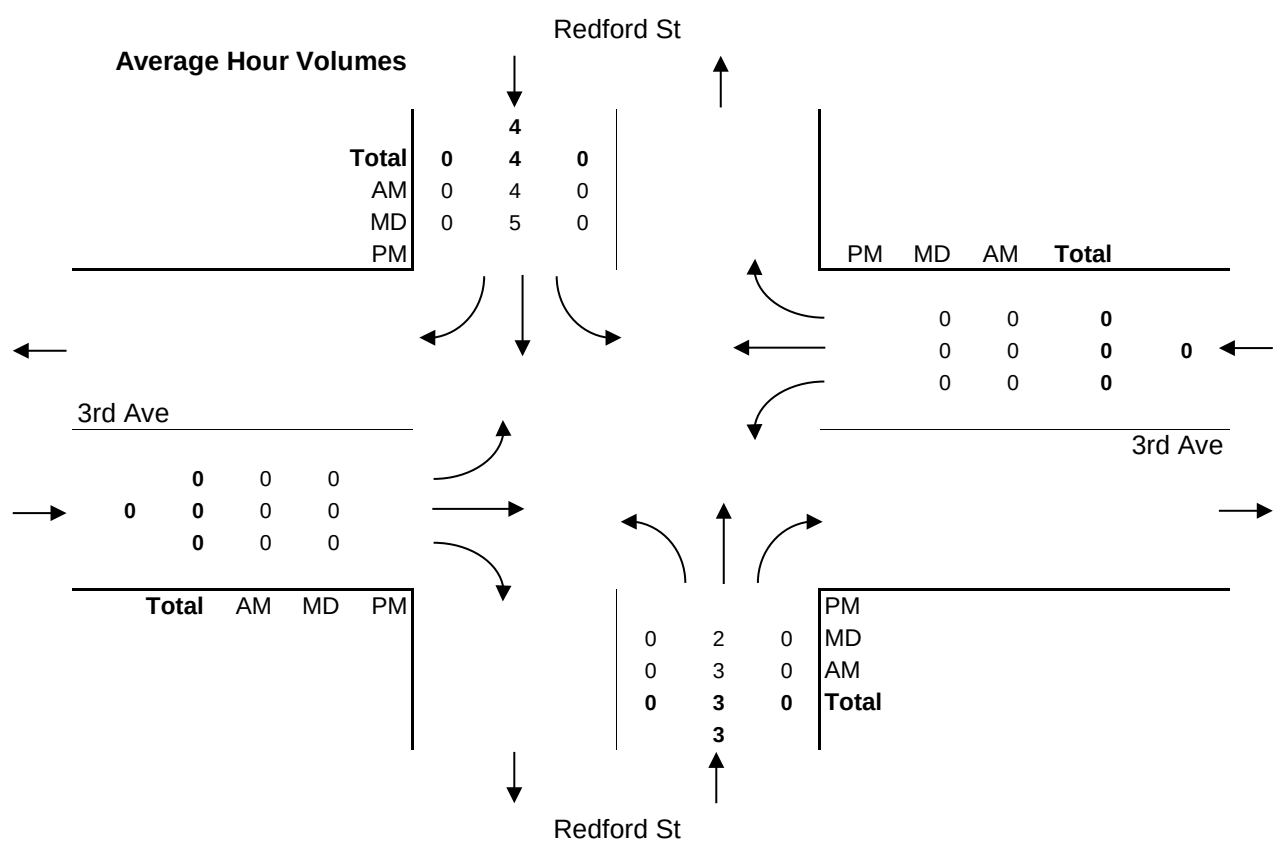

Vehicle Turning Movement Survey
With Classification

Major Route: 3rd Avenue
Minor Route: Redford Street
Municipality: Port Alberni
Filename: 1-3rd Ave @ Redford St-Sep 28, 2017.xlsx
Location #: 1

Date: September 28, 2017
Day-of-week: Thursday

East/West Route: 3rd Avenue
Intersection Type: 4-leg
Signalized?: Yes
Weather: Clear and dry

Vehicle Classifications: Regular Vehicles
Buses
Articulated Trucks
Cube Trucks
Dump Trucks
Emergency Trucks
Garbage Trucks
Logging Trucks
RVs
Utility Trucks

This data is for RVs

Shift	Start	End	Duration
AM	7:00	12:00	5.00
MD	12:00	15:00	3.00
PM			
Total	**7:00**		**8.00**

Notes: 24-hour clock used for reporting (15-minute increments)
North Approach - southbound vehicles approaching intersection from the north
15x4 - 15 min volume (from maximum 15 minute period of movement/approach in peak hour period [*]) x 4
Pedestrians - N indicates pedestrians crossing north approach (east/west)

Comments:

Survey Data
RVs

3rd Avenue @ Redford Street
Thursday, September 28, 2017

Time Period Begins	Redford St NORTH Approach				Redford St SOUTH Approach				3rd Ave WEST Approach				3rd Ave EAST Approach				Total Volume		Peak				
	Left	Thru	Right	Total	Left	Thru	Right	Total	Left	Thru	Right	Total	Left	Thru	Right	Total	15-min	Hour		N	S	W	E
7:00	0	1	0	**1**	0	0	0	**0**	0	0	0	**0**	0	0	0	**0**	**1**			0	0	0	0
7:15	0	0	0	**0**	0	0	0	**0**	0	0	0	**0**	0	0	0	**0**	**0**			0	0	0	0
7:30	0	0	0	**0**	0	0	0	**0**	0	0	0	**0**	0	0	0	**0**	**0**			0	0	0	0
7:45	0	0	0	**0**	0	0	0	**0**	0	0	0	**0**	0	0	0	**0**	**0**	1		0	0	0	0
8:00	0	0	0	**0**	0	0	0	**0**	0	0	0	**0**	0	0	0	**0**	**0**	0		0	0	0	0
8:15	0	0	0	**0**	0	0	0	**0**	0	0	0	**0**	0	0	0	**0**	**0**	0		0	0	0	0
8:30	0	0	0	**0**	0	1	0	**1**	0	0	0	**0**	0	0	0	**0**	**1**	1		0	0	0	0
8:45	0	0	0	**0**	0	0	0	**0**	0	0	0	**0**	0	0	0	**0**	**0**	1		0	0	0	0
9:00	0	0	0	**0**	0	0	0	**0**	0	0	0	**0**	0	0	0	**0**	**0**	1		0	0	0	0
9:15	0	0	0	**0**	0	0	0	**0**	0	0	0	**0**	0	0	0	**0**	**0**	1		0	0	0	0
9:30	0	0	0	**0**	0	0	0	**0**	0	0	0	**0**	0	0	0	**0**	**0**	0		0	0	0	0
9:45	0	0	0	**0**	0	0	0	**0**	0	0	0	**0**	0	0	0	**0**	**0**	0		0	0	0	0
10:00	0	0	0	**0**	0	0	0	**0**	0	0	0	**0**	0	0	0	**0**	**0**	0		0	0	0	0
10:15	0	0	0	**0**	0	0	0	**0**	0	0	0	**0**	0	0	0	**0**	**0**	0		0	0	0	0
10:30	0	0	0	**0**	0	0	0	**0**	0	0	0	**0**	0	0	0	**0**	**0**	0		0	0	0	0
10:45	0	1	0	**1**	0	0	0	**0**	0	0	0	**0**	0	0	0	**0**	**1**	1		0	0	0	0
11:00	0	0	0	**0**	0	0	0	**0**	0	0	0	**0**	0	0	0	**0**	**0**	1	*	0	0	0	0
11:15	0	0	0	**0**	0	0	0	**0**	0	0	0	**0**	0	0	0	**0**	**0**	1	*	0	0	0	0
11:30	0	0	0	**0**	0	1	0	**1**	0	0	0	**0**	0	0	0	**0**	**1**	2	*	0	0	0	0
11:45	0	0	0	**0**	0	0	0	**0**	0	0	0	**0**	0	0	0	**0**	**0**	1	+	0	0	0	0
Total	0	2	0	**2**	0	2	0	**2**	0	0	0	**0**	0	0	0	**0**	**4**			0	0	0	0
12:00	1	0	0	**1**	0	0	1	**1**	0	0	0	**0**	0	0	0	**0**	**2**			0	0	0	0
12:15	0	0	0	**0**	0	0	0	**0**	0	0	0	**0**	0	0	0	**0**	**0**			0	0	0	0
12:30	0	0	0	**0**	0	1	0	**1**	0	0	0	**0**	0	0	0	**0**	**1**			0	0	0	0
12:45	0	1	0	**1**	0	0	0	**0**	0	0	0	**0**	0	0	0	**0**	**1**	4		0	0	0	0
13:00	0	1	0	**1**	0	0	0	**0**	0	0	0	**0**	0	0	0	**0**	**1**	3		0	0	0	0
13:15	0	0	0	**0**	0	0	0	**0**	0	0	0	**0**	0	0	0	**0**	**0**	3		0	0	0	0
13:30	0	2	0	**2**	0	0	0	**0**	0	0	0	**0**	0	0	0	**0**	**2**	4		0	0	0	0
13:45	0	0	0	**0**	0	1	0	**1**	0	0	0	**0**	0	0	0	**0**	**1**	4		0	0	0	0
14:00	0	0	0	**0**	0	2	0	**2**	0	0	0	**0**	0	0	0	**0**	**2**	5	*	0	0	0	0
14:15	0	0	0	**0**	0	1	0	**1**	0	0	0	**0**	0	0	0	**0**	**1**	6	*	0	0	0	0
14:30	0	0	0	**0**	0	0	1	**1**	0	0	0	**0**	0	0	1	**1**	**2**	6	*	0	0	0	0
14:45	0	0	0	**0**	0	0	0	**0**	0	0	0	**0**	0	0	0	**0**	**0**	5	+	0	0	0	0
n/a																							
n/a																							
n/a																							
n/a																							
Total	1	4	0	**5**	0	5	2	**7**	0	0	0	**0**	0	0	1	**1**	**13**			0	0	0	0
n/a																							
n/a																							
n/a																							
n/a																							
n/a																							
n/a																							
n/a																							
n/a																							
n/a																							
n/a																							
n/a																							
n/a																							
n/a																							
n/a																							
n/a																							
n/a																							
n/a																							
n/a																							
Total																							

AM Peak Period
RVs

3rd Avenue @ Redford Street
Thursday, September 28, 2017

Time Period Begins	Redford St NORTH Approach				Redford St SOUTH Approach				3rd Ave WEST Approach				3rd Ave EAST Approach				Total Volume		Peak					Conflict	
	Left	Thru	Right	Total	Left	Thru	Right	Total	Left	Thru	Right	Total	Left	Thru	Right	Total	15-min	Hour		N	S	W	E	15 min	Hr
7:00	0	1	0	1	0	0	0	0	0	0	0	0	0	0	0	0	1			0	0	0	0	1	
7:15	0	0	0	0	0	0	0	0	0	0	0	0	0	0	0	0	0			0	0	0	0	0	
7:30	0	0	0	0	0	0	0	0	0	0	0	0	0	0	0	0	0			0	0	0	0	0	
7:45	0	0	0	0	0	0	0	0	0	0	0	0	0	0	0	0	0	1		0	0	0	0	0	1
8:00	0	0	0	0	0	0	0	0	0	0	0	0	0	0	0	0	0	0		0	0	0	0	0	0
8:15	0	0	0	0	0	0	0	0	0	0	0	0	0	0	0	0	0	0		0	0	0	0	0	0
8:30	0	0	0	0	0	1	0	1	0	0	0	0	0	0	0	0	1	1		0	0	0	0	1	1
8:45	0	0	0	0	0	0	0	0	0	0	0	0	0	0	0	0	0	1		0	0	0	0	0	1
9:00	0	0	0	0	0	0	0	0	0	0	0	0	0	0	0	0	0	1		0	0	0	0	0	1
9:15	0	0	0	0	0	0	0	0	0	0	0	0	0	0	0	0	0	1		0	0	0	0	0	1
9:30	0	0	0	0	0	0	0	0	0	0	0	0	0	0	0	0	0	0		0	0	0	0	0	0
9:45	0	0	0	0	0	0	0	0	0	0	0	0	0	0	0	0	0	0		0	0	0	0	0	0
10:00	0	0	0	0	0	0	0	0	0	0	0	0	0	0	0	0	0	0		0	0	0	0	0	0
10:15	0	0	0	0	0	0	0	0	0	0	0	0	0	0	0	0	0	0		0	0	0	0	0	0
10:30	0	0	0	0	0	0	0	0	0	0	0	0	0	0	0	0	0	0		0	0	0	0	0	0
10:45	0	1	0	1	0	0	0	0	0	0	0	0	0	0	0	0	1	1		0	0	0	0	1	1
11:00	0	0	0	0	0	0	0	0	0	0	0	0	0	0	0	0	0	1	*	0	0	0	0	0	1
11:15	0	0	0	0	0	0	0	0	0	0	0	0	0	0	0	0	0	1	*	0	0	0	0	0	1
11:30	0	0	0	0	0	1	0	1	0	0	0	0	0	0	0	0	1	2	*	0	0	0	0	1	2
11:45	0	0	0	0	0	0	0	0	0	0	0	0	0	0	0	0	0	1	+	0	0	0	0	0	1
Total	0	2	0	**2**	0	2	0	**2**	0	0	0	**0**	0	0	0	**0**	4			0	0	0	0		2
Avg Hr	0	0	0	**0**	0	0	0	**0**	0	0	0	**0**	0	0	0	**0**	1			0	0	0	0		

Peak hour of the intersection

Pk Hr	0	0	0	0	0	1	0	1	0	0	0	0	0	0	0	0	1	*		0	0	0	0		1
15x4	0	0	0	0	0	4	0	4	0	0	0	0	0	0	0	0	4	+		0	0	0	0		4
PHF	n/a	n/a	n/a	**n/a**	n/a	0.25	n/a	**0.25**	n/a	n/a	n/a	**n/a**	n/a	n/a	n/a	**n/a**	0.25			n/a	n/a	n/a	n/a		0.25

Peak hour of conflicting volumes for the intersection

Pk Hr	0	0	0	0	0	1	0	1	0	0	0	0	0	0	0	0	1	*		0	0	0	0		1
15x4	0	0	0	0	0	4	0	4	0	0	0	0	0	0	0	0	4	+		0	0	0	0		4
PHF	n/a	n/a	n/a	**n/a**	n/a	0.25	n/a	**0.25**	n/a	n/a	n/a	**n/a**	n/a	n/a	n/a	**n/a**	0.25			n/a	n/a	n/a	n/a		0.25

** Calculated peak hour occurs during the first or last hour of shift and therefore may be invalid. **

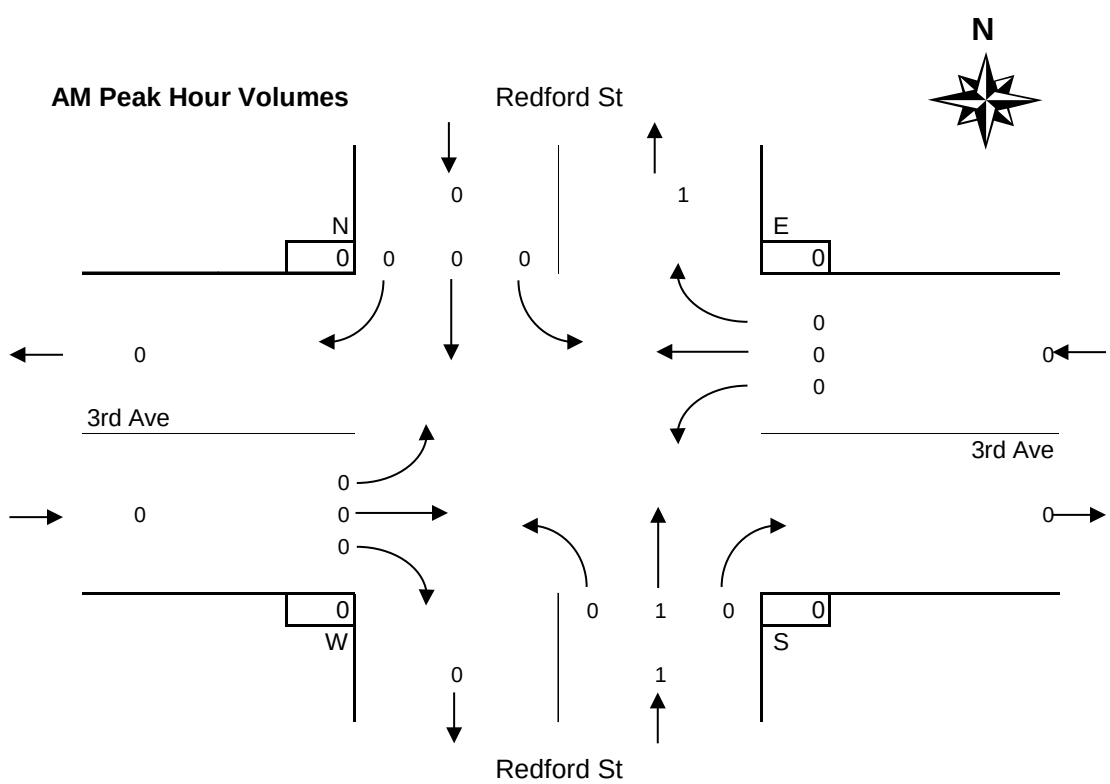

MD Peak Period
RVs

3rd Avenue @ Redford Street
Thursday, September 28, 2017

Time Period Begins	Redford St NORTH Approach				Redford St SOUTH Approach				3rd Ave WEST Approach				3rd Ave EAST Approach				Total Volume		Peak					Conflict	
	Left	Thru	Right	Total	Left	Thru	Right	Total	Left	Thru	Right	Total	Left	Thru	Right	Total	15-min	Hour		N	S	W	E	15 min	Hr
12:00	1	0	0	1	0	0	1	1	0	0	0	0	0	0	0	0	2			0	0	0	0	2	
12:15	0	0	0	0	0	0	0	0	0	0	0	0	0	0	0	0	0			0	0	0	0	0	
12:30	0	0	0	0	0	1	0	1	0	0	0	0	0	0	0	0	1			0	0	0	0	1	
12:45	0	1	0	1	0	0	0	0	0	0	0	0	0	0	0	0	1	4		0	0	0	0	1	4
13:00	0	1	0	1	0	0	0	0	0	0	0	0	0	0	0	0	1	3		0	0	0	0	1	3
13:15	0	0	0	0	0	0	0	0	0	0	0	0	0	0	0	0	0	3		0	0	0	0	0	3
13:30	0	2	0	2	0	0	0	0	0	0	0	0	0	0	0	0	2	4		0	0	0	0	2	4
13:45	0	0	0	0	0	1	0	1	0	0	0	0	0	0	0	0	1	4		0	0	0	0	1	4
14:00	0	0	0	0	0	2	0	2	0	0	0	0	0	0	0	0	2	5	*	0	0	0	0	2	5
14:15	0	0	0	0	0	1	0	1	0	0	0	0	0	0	0	0	1	6	*	0	0	0	0	1	6
14:30	0	0	0	0	0	0	1	1	0	0	0	0	0	0	1	1	2	6	*	0	0	0	0	2	6
14:45	0	0	0	0	0	0	0	0	0	0	0	0	0	0	0	0	0	5	+	0	0	0	0	0	5
n/a																									
n/a																									
n/a																									
n/a																									
Total	1	4	0	**5**	0	5	2	**7**	0	0	0	**0**	0	0	1	**1**	13			0	0	0	0		9
Avg Hr	0	1	0	**2**	0	2	1	**2**	0	0	0	**0**	0	0	0	**0**	4			0	0	0	0		

Peak hour of the intersection

Pk Hr	0	0	0	0	0	3	1	4	0	0	0	0	0	0	1	1	5	*		0	0	0	0		5
15x4	0	0	0	0	0	8	4	8	0	0	0	0	0	0	4	4	8	+		0	0	0	0		16
PHF	n/a	n/a	n/a	**n/a**	n/a	0.38	0.25	**0.50**	n/a	n/a	n/a	**n/a**	n/a	n/a	0.25	**0.25**	0.63			n/a	n/a	n/a	n/a		0.31

Peak hour of conflicting volumes for the intersection

Pk Hr	0	2	0	2	0	4	0	4	0	0	0	0	0	0	0	0	6	*		0	0	0	0		4
15x4	0	8	0	8	0	8	0	8	0	0	0	0	0	0	0	0	8	+		0	0	0	0		8
PHF	n/a	0.25	n/a	**0.25**	n/a	0.50	n/a	**0.50**	n/a	n/a	n/a	**n/a**	n/a	n/a	n/a	**n/a**	0.75			n/a	n/a	n/a	n/a		0.50

** Calculated peak hour occurs during the first or last hour of shift and therefore may be invalid. **

MD Peak Hour Volumes

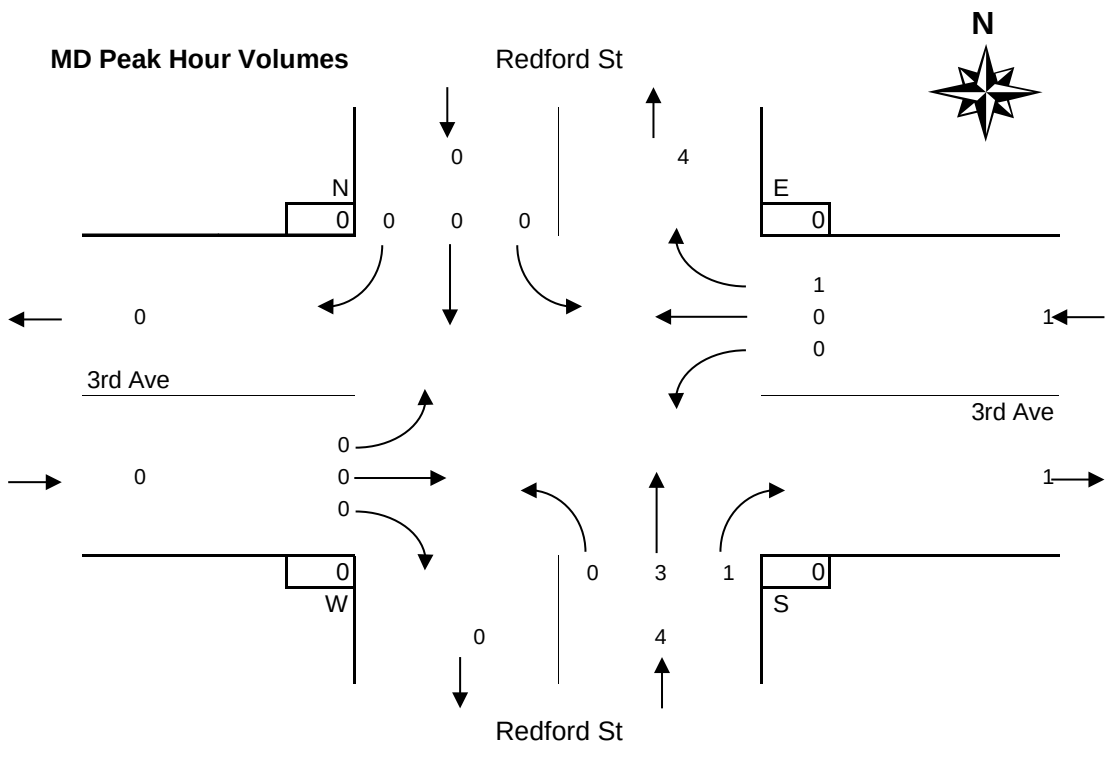

PM Peak Period
RVs

3rd Avenue @ Redford Street
Thursday, September 28, 2017

Time Period Begins	Redford St NORTH Approach				Redford St SOUTH Approach				3rd Ave WEST Approach				3rd Ave EAST Approach				Total Volume		Peak					Conflict	
	Left	Thru	Right	Total	Left	Thru	Right	Total	Left	Thru	Right	Total	Left	Thru	Right	Total	15-min	Hour		N	S	W	E	15 min	Hr
n/a																									
n/a																									
n/a																									
n/a																									
n/a																									
n/a																									
n/a																									
n/a																									
n/a																									
n/a																									
n/a																									
n/a																									
n/a																									
n/a																									
n/a																									
n/a																									
n/a																									
n/a																									
n/a																									
Total																									0
Avg Hr																									

Peak hour of the intersection

Pk Hr																		*							0
15x4																		+							0
PHF																									n/a

Peak hour of conflicting volumes for the intersection

Pk Hr																		*							0
15x4																		+							0
PHF																									n/a

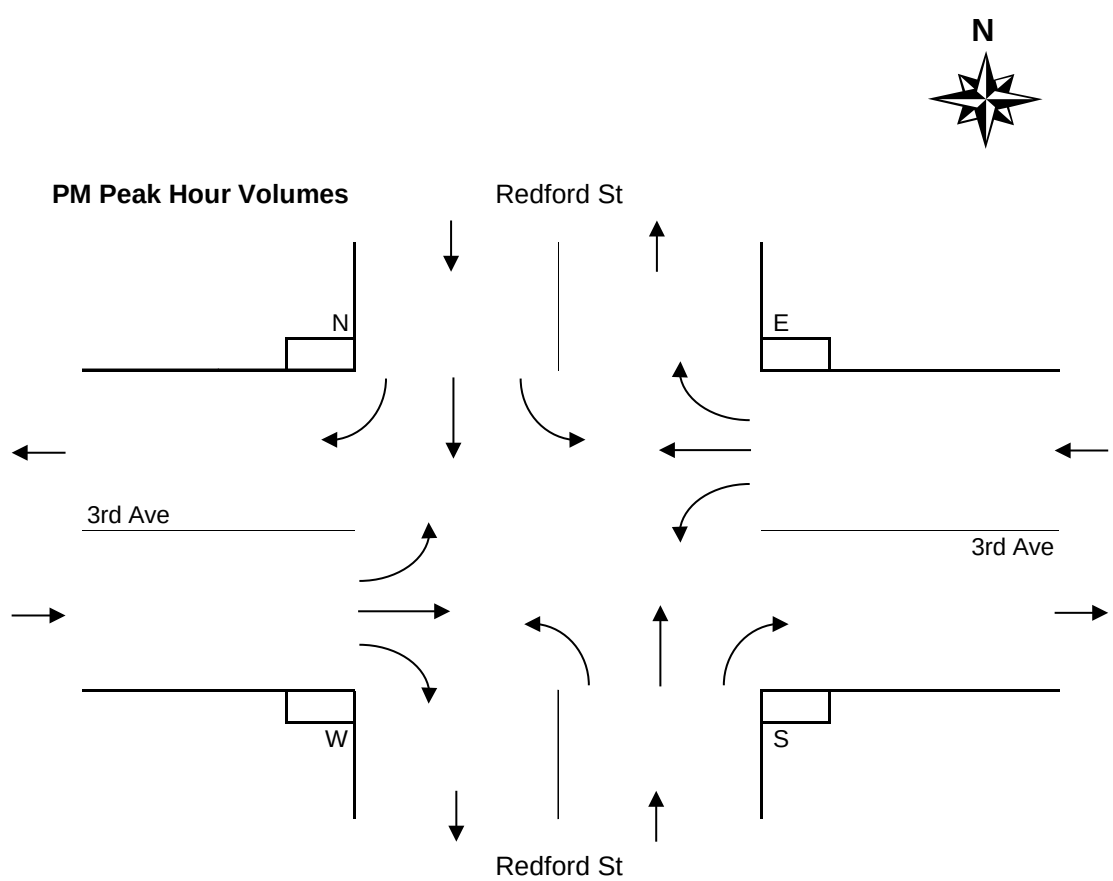

Period Hourly Averages
RVs

3rd Avenue @ Redford Street
Thursday, September 28, 2017

Entire Survey Period
8 Hours

	Redford St				Redford St				3rd Ave				3rd Ave								
	NORTH Approach				SOUTH Approach				WEST Approach				EAST Approach				Total				
	Left	Thru	Right	Total	Left	Thru	Right	Total	Left	Thru	Right	Total	Left	Thru	Right	Total	Volume	N	S	W	E
Total	1	6	0	**7**	0	7	2	**9**	0	0	0	**0**	0	0	1	**1**	17	0	0	0	0
Avg Hr	0	1	0	**1**	0	1	0	**1**	0	0	0	**0**	0	0	0	**0**	2	0	0	0	0

AM Peak Period
5 Hours

	Redford St				Redford St				3rd Ave				3rd Ave								
	NORTH Approach				SOUTH Approach				WEST Approach				EAST Approach				Total				
Totals	Left	Thru	Right	Total	Left	Thru	Right	Total	Left	Thru	Right	Total	Left	Thru	Right	Total	Volume	N	S	W	E
Period	0	2	0	**2**	0	2	0	**2**	0	0	0	**0**	0	0	0	**0**	4	0	0	0	0
Avg Hr	0	0	0	**0**	0	0	0	**0**	0	0	0	**0**	0	0	0	**0**	1	0	0	0	0

MD Peak Period
3 Hours

	Redford St				Redford St				3rd Ave				3rd Ave								
	NORTH Approach				SOUTH Approach				WEST Approach				EAST Approach				Total				
Totals	Left	Thru	Right	Total	Left	Thru	Right	Total	Left	Thru	Right	Total	Left	Thru	Right	Total	Volume	N	S	W	E
Total	1	4	0	**5**	0	5	2	**7**	0	0	0	**0**	0	0	1	**1**	13	0	0	0	0
Avg Hr	0	1	0	**2**	0	2	1	**2**	0	0	0	**0**	0	0	0	**0**	4	0	0	0	0

PM Peak Period
Hours

	Redford St				Redford St				3rd Ave				3rd Ave								
	NORTH Approach				SOUTH Approach				WEST Approach				EAST Approach				Total				
Totals	Left	Thru	Right	Total	Left	Thru	Right	Total	Left	Thru	Right	Total	Left	Thru	Right	Total	Volume	N	S	W	E
Total																					
Avg Hr																					

Average Hour Volumes

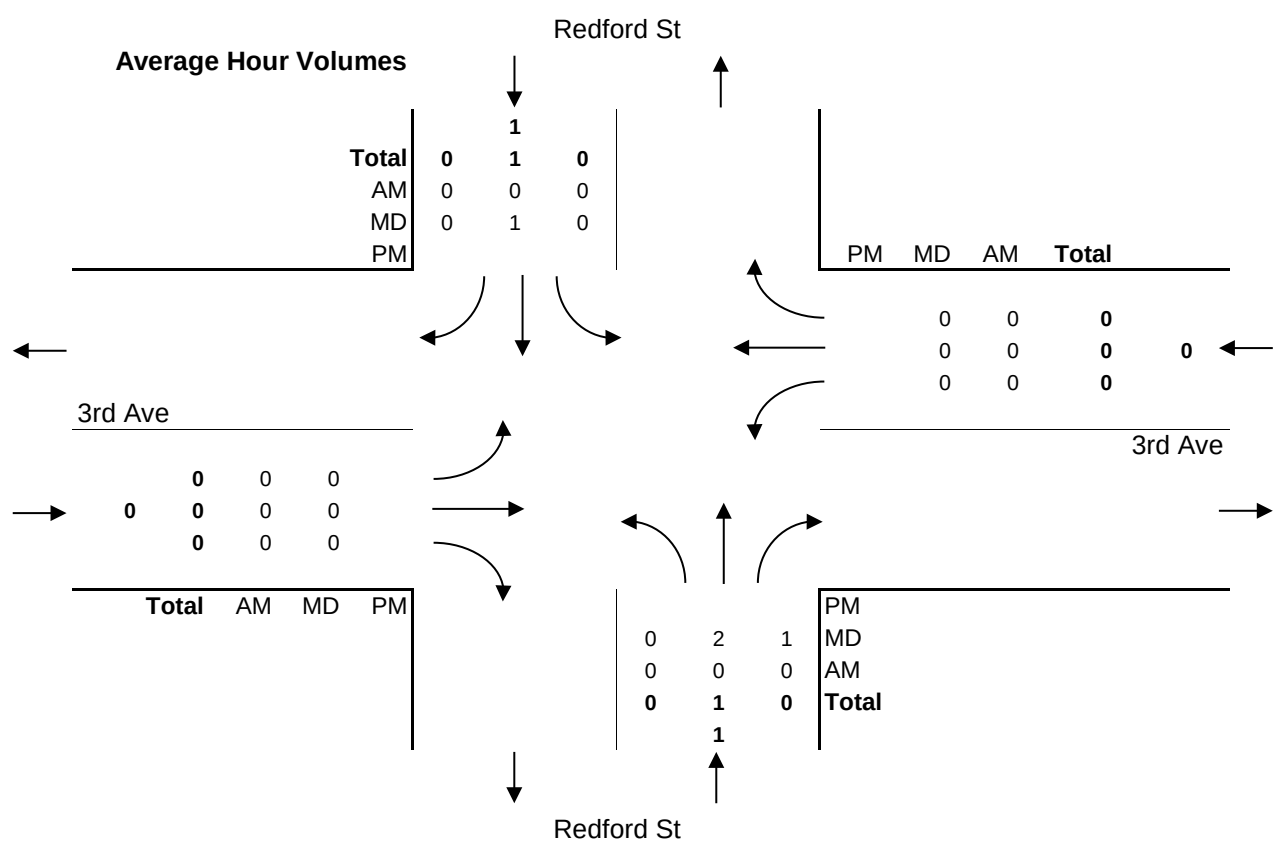

Vehicle Turning Movement Survey
With Classification

Major Route: 3rd Avenue
Minor Route: Redford Street
Municipality: Port Alberni
Filename: 1-3rd Ave @ Redford St-Sep 28, 2017.xlsx
Location #: 1

Date: September 28, 2017
Day-of-week: Thursday

East/West Route: 3rd Avenue
Intersection Type: 4-leg
Signalized?: Yes
Weather: Clear and dry

Vehicle Classifications: Regular Vehicles
Buses
Articulated Trucks
Cube Trucks
Dump Trucks
Emergency Trucks
Garbage Trucks
Logging Trucks
RVs
Utility Trucks

This data is for Utility Trucks

Shift	Start	End	Duration
AM	7:00	12:00	5.00
MD	12:00	15:00	3.00
PM			
Total	**7:00**		**8.00**

Notes: 24-hour clock used for reporting (15-minute increments)
North Approach - southbound vehicles approaching intersection from the north
15x4 - 15 min volume (from maximum 15 minute period of movement/approach in peak hour period [*]) x 4
Pedestrians - N indicates pedestrians crossing north approach (east/west)

Comments:

Survey Data
Utility Trucks

3rd Avenue @ Redford Street
Thursday, September 28, 2017

Time	Redford St				Redford St				3rd Ave				3rd Ave										
Period	NORTH Approach				SOUTH Approach				WEST Approach				EAST Approach				Total Volume		Peak				
Begins	Left	Thru	Right	Total	Left	Thru	Right	Total	Left	Thru	Right	Total	Left	Thru	Right	Total	15-min	Hour		N	S	W	E
7:00	0	0	0	**0**	0	0	0	**0**	0	0	2	**2**	1	0	1	**2**	**4**			0	0	0	0
7:15	0	1	0	**1**	0	0	0	**0**	0	0	1	**1**	3	0	0	**3**	**5**			0	0	0	0
7:30	0	0	0	**0**	0	0	2	**2**	0	0	0	**0**	0	0	1	**1**	**3**			0	0	0	0
7:45	0	2	0	**2**	1	1	1	**3**	0	0	0	**0**	4	0	1	**5**	**10**	22		0	0	0	0
8:00	0	0	0	**0**	1	3	2	**6**	0	0	0	**0**	1	0	0	**1**	**7**	25		0	0	0	0
8:15	1	2	0	**3**	1	3	0	**4**	0	0	0	**0**	2	0	2	**4**	**11**	31		0	0	0	0
8:30	0	2	0	**2**	1	1	0	**2**	0	0	0	**0**	0	0	0	**0**	**4**	32		0	0	0	0
8:45	0	1	0	**1**	0	2	0	**2**	0	0	1	**1**	0	0	0	**0**	**4**	26		0	0	0	0
9:00	0	1	0	**1**	0	0	0	**0**	0	0	0	**0**	3	0	1	**4**	**5**	24		0	0	0	0
9:15	0	2	0	**2**	0	5	1	**6**	0	1	0	**1**	0	0	1	**1**	**10**	23		0	0	0	0
9:30	0	3	0	**3**	1	2	0	**3**	0	0	0	**0**	1	0	1	**2**	**8**	27		0	0	0	0
9:45	0	1	0	**1**	0	2	0	**2**	0	0	0	**0**	0	0	0	**0**	**3**	26		0	0	0	0
10:00	0	2	0	**2**	0	1	1	**2**	0	0	0	**0**	0	0	2	**2**	**6**	27		0	0	0	0
10:15	0	0	0	**0**	0	1	1	**2**	0	0	0	**0**	2	0	1	**3**	**5**	22		0	0	0	0
10:30	0	2	0	**2**	0	1	0	**1**	1	0	0	**1**	0	1	0	**1**	**5**	19		0	0	0	0
10:45	0	1	0	**1**	0	3	0	**3**	0	0	0	**0**	1	0	0	**1**	**5**	21		0	0	0	0
11:00	1	0	0	**1**	0	1	2	**3**	0	0	0	**0**	0	1	0	**1**	**5**	20	*	0	0	0	0
11:15	1	1	0	**2**	0	1	0	**1**	0	0	0	**0**	0	0	0	**0**	**3**	18	*	0	0	0	0
11:30	0	2	0	**2**	0	1	2	**3**	0	0	0	**0**	1	0	1	**2**	**7**	20	*	0	0	0	0
11:45	0	1	0	**1**	0	1	2	**3**	0	0	0	**0**	0	0	1	**1**	**5**	20	+	0	0	0	0
Total	3	24	0	**27**	5	29	14	**48**	1	1	4	**6**	19	2	13	**34**	**115**			0	0	0	0
12:00	1	4	0	**5**	0	2	0	**2**	0	0	0	**0**	0	0	0	**0**	**7**			0	0	0	0
12:15	1	0	0	**1**	0	3	1	**4**	0	0	0	**0**	0	0	1	**1**	**6**			0	0	0	0
12:30	1	2	0	**3**	0	1	0	**1**	0	0	0	**0**	1	0	0	**1**	**5**			0	0	0	0
12:45	0	1	0	**1**	0	4	1	**5**	0	0	0	**0**	1	1	1	**3**	**9**	27		0	0	0	0
13:00	0	1	0	**1**	0	1	0	**1**	0	1	0	**1**	2	0	1	**3**	**6**	26		0	0	0	0
13:15	0	3	0	**3**	0	1	0	**1**	0	0	0	**0**	0	0	0	**0**	**4**	24		0	0	0	0
13:30	0	1	0	**1**	1	3	1	**5**	0	0	0	**0**	1	0	0	**1**	**7**	26		0	0	0	0
13:45	1	2	0	**3**	0	2	0	**2**	1	0	0	**1**	0	1	0	**1**	**7**	24		0	0	0	0
14:00	0	1	0	**1**	0	1	1	**2**	0	1	0	**1**	2	0	1	**3**	**7**	25	*	0	0	0	0
14:15	0	0	0	**0**	0	2	0	**2**	0	0	0	**0**	0	0	1	**1**	**3**	24	*	0	0	0	0
14:30	0	1	0	**1**	0	4	0	**4**	0	0	0	**0**	0	0	0	**0**	**5**	22	*	0	0	0	0
14:45	1	1	0	**2**	0	3	0	**3**	0	1	0	**1**	0	0	0	**0**	**6**	21	+	0	0	0	0
n/a																							
n/a																							
n/a																							
n/a																							
Total	5	17	0	**22**	1	27	4	**32**	1	3	0	**4**	7	2	5	**14**	**72**			0	0	0	0
n/a																							
n/a																							
n/a																							
n/a																							
n/a																							
n/a																							
n/a																							
n/a																							
n/a																							
n/a																							
n/a																							
n/a																							
n/a																							
n/a																							
n/a																							
n/a																							
n/a																							
n/a																							
Total																							

AM Peak Period
Utility Trucks

3rd Avenue @ Redford Street
Thursday, September 28, 2017

Time Period Begins	Redford St NORTH Approach				Redford St SOUTH Approach				3rd Ave WEST Approach				3rd Ave EAST Approach				Total Volume		Peak					Conflict	
	Left	Thru	Right	Total	Left	Thru	Right	Total	Left	Thru	Right	Total	Left	Thru	Right	Total	15-min	Hour		N	S	W	E	15 min	Hr
7:00	0	0	0	0	0	0	0	0	0	0	2	2	1	0	1	2	4			0	0	0	0	3	
7:15	0	1	0	1	0	0	0	0	0	0	1	1	3	0	0	3	5			0	0	0	0	5	
7:30	0	0	0	0	0	0	2	2	0	0	0	0	0	0	1	1	3			0	0	0	0	3	
7:45	0	2	0	2	1	1	1	3	0	0	0	0	4	0	1	5	10	22		0	0	0	0	7	18
8:00	0	0	0	0	1	3	2	6	0	0	0	0	1	0	0	1	7	25		0	0	0	0	6	21
8:15	1	2	0	3	1	3	0	4	0	0	0	0	2	0	2	4	11	31		0	0	0	0	6	22
8:30	0	2	0	2	1	1	0	2	0	0	0	0	0	0	0	0	4	32		0	0	0	0	3	22
8:45	0	1	0	1	0	2	0	2	0	0	1	1	0	0	0	0	4	26		0	0	0	0	3	18
9:00	0	1	0	1	0	0	0	0	0	0	0	0	3	0	1	4	5	24		0	0	0	0	4	16
9:15	0	2	0	2	0	5	1	6	0	1	0	1	0	0	1	1	10	23		0	0	0	0	7	17
9:30	0	3	0	3	1	2	0	3	0	0	0	0	1	0	1	2	8	27		0	0	0	0	5	19
9:45	0	1	0	1	0	2	0	2	0	0	0	0	0	0	0	0	3	26		0	0	0	0	2	18
10:00	0	2	0	2	0	1	1	2	0	0	0	0	0	0	2	2	6	27		0	0	0	0	4	18
10:15	0	0	0	0	0	1	1	2	0	0	0	0	2	0	1	3	5	22		0	0	0	0	4	15
10:30	0	2	0	2	0	1	0	1	1	0	0	1	0	1	0	1	5	19		0	0	0	0	4	14
10:45	0	1	0	1	0	3	0	3	0	0	0	0	1	0	0	1	5	21		0	0	0	0	4	16
11:00	1	0	0	1	0	1	2	3	0	0	0	0	0	1	0	1	5	20	*	0	0	0	0	5	17
11:15	1	1	0	2	0	1	0	1	0	0	0	0	0	0	0	0	3	18	*	0	0	0	0	2	15
11:30	0	2	0	2	0	1	2	3	0	0	0	0	1	0	1	2	7	20	*	0	0	0	0	4	15
11:45	0	1	0	1	0	1	2	3	0	0	0	0	0	0	1	1	5	20	+	0	0	0	0	4	15
Total	3	24	0	**27**	5	29	14	**48**	1	1	4	**6**	19	2	13	**34**	115			0	0	0	0		70
Avg Hr	1	5	0	**5**	1	6	3	**10**	0	0	1	**1**	4	0	3	**7**	23			0	0	0	0		

Peak hour of the intersection

Pk Hr	2	4	0	6	0	4	6	10	0	0	0	0	1	1	2	4	20	*		0	0	0	0		15
15x4	4	8	0	8	0	4	8	12	0	0	0	0	4	4	4	8	28	+		0	0	0	0		24
PHF	0.50	0.50	n/a	**0.75**	n/a	1.00	0.75	**0.83**	n/a	n/a	n/a	**n/a**	0.25	0.25	0.50	**0.50**	0.71			n/a	n/a	n/a	n/a		0.63

Peak hour of conflicting volumes for the intersection

Pk Hr	2	4	0	6	0	4	6	10	0	0	0	0	1	1	2	4	20	*		0	0	0	0		15
15x4	4	8	0	8	0	4	8	12	0	0	0	0	4	4	4	8	28	+		0	0	0	0		24
PHF	0.50	0.50	n/a	**0.75**	n/a	1.00	0.75	**0.83**	n/a	n/a	n/a	**n/a**	0.25	0.25	0.50	**0.50**	0.71			n/a	n/a	n/a	n/a		0.63

** Calculated peak hour occurs during the first or last hour of shift and therefore may be invalid. **

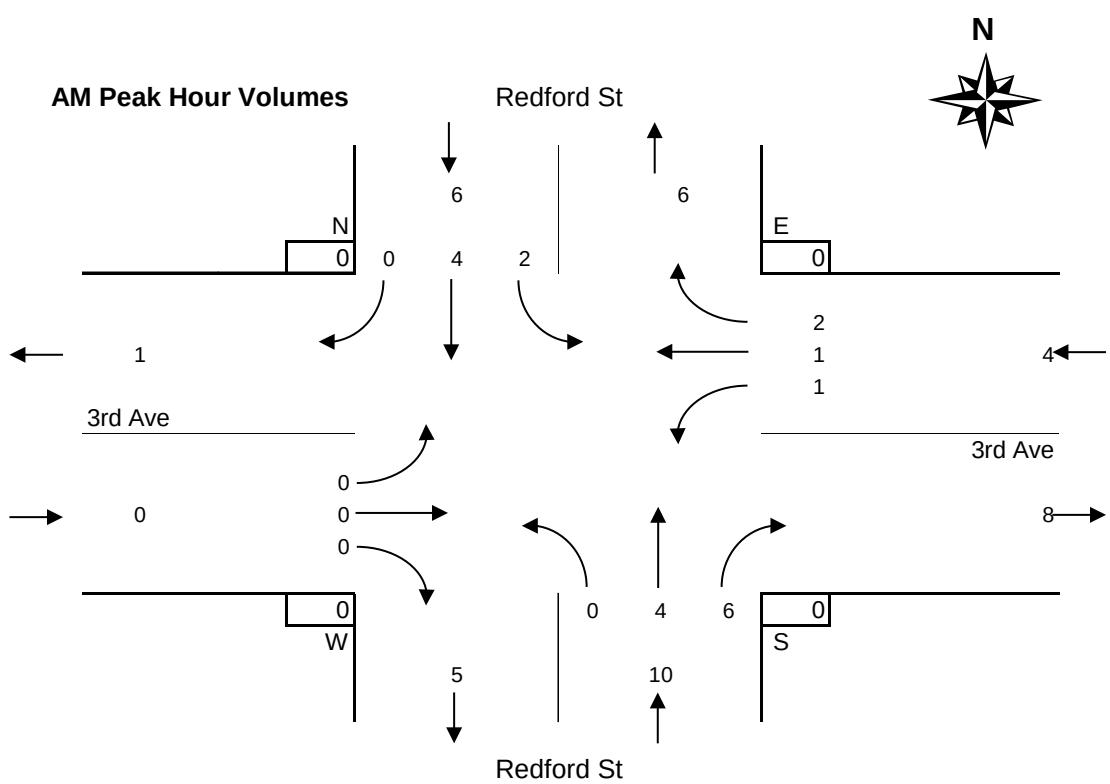

MD Peak Period
Utility Trucks

3rd Avenue @ Redford Street
Thursday, September 28, 2017

Time Period Begins	Redford St NORTH Approach				Redford St SOUTH Approach				3rd Ave WEST Approach				3rd Ave EAST Approach				Total Volume		Peak					Conflict	
	Left	Thru	Right	Total	Left	Thru	Right	Total	Left	Thru	Right	Total	Left	Thru	Right	Total	15-min	Hour		N	S	W	E	15 min	Hr
12:00	1	4	0	5	0	2	0	2	0	0	0	0	0	0	0	0	7			0	0	0	0	4	
12:15	1	0	0	1	0	3	1	4	0	0	0	0	0	0	1	1	6			0	0	0	0	6	
12:30	1	2	0	3	0	1	0	1	0	0	0	0	1	0	0	1	5			0	0	0	0	3	
12:45	0	1	0	1	0	4	1	5	0	0	0	0	1	1	1	3	9	27		0	0	0	0	7	20
13:00	0	1	0	1	0	1	0	1	0	1	0	1	2	0	1	3	6	26		0	0	0	0	4	20
13:15	0	3	0	3	0	1	0	1	0	0	0	0	0	0	0	0	4	24		0	0	0	0	3	17
13:30	0	1	0	1	1	3	1	5	0	0	0	0	1	0	0	1	7	26		0	0	0	0	5	19
13:45	1	2	0	3	0	2	0	2	1	0	0	1	0	1	0	1	7	24		0	0	0	0	5	17
14:00	0	1	0	1	0	1	1	2	0	1	0	1	2	0	1	3	7	25	*	0	0	0	0	5	18
14:15	0	0	0	0	0	2	0	2	0	0	0	0	0	0	1	1	3	24	*	0	0	0	0	3	18
14:30	0	1	0	1	0	4	0	4	0	0	0	0	0	0	0	0	5	22	*	0	0	0	0	4	17
14:45	1	1	0	2	0	3	0	3	0	1	0	1	0	0	0	0	6	21	+	0	0	0	0	5	17
n/a																									
n/a																									
n/a																									
n/a																									
Total	5	17	0	**22**	1	27	4	**32**	1	3	0	**4**	7	2	5	**14**	72			0	0	0	0		46
Avg Hr	2	6	0	**7**	0	9	1	**11**	0	1	0	**1**	2	1	2	**5**	24			0	0	0	0		

Peak hour of the intersection

Pk Hr	1	3	0	4	0	10	1	11	0	2	0	2	2	0	2	4	21	*		0	0	0	0		16
15x4	4	4	0	8	0	16	4	16	0	4	0	4	8	0	4	12	28	+		0	0	0	0		36
PHF	0.25	0.75	n/a	**0.50**	n/a	0.63	0.25	**0.69**	n/a	0.50	n/a	**0.50**	0.25	n/a	0.50	**0.33**	0.75			n/a	n/a	n/a	n/a		0.44

Peak hour of conflicting volumes for the intersection

Pk Hr	1	4	0	5	1	8	2	11	1	1	0	2	3	1	2	6	24	*		0	0	0	0		15
15x4	4	8	0	12	4	12	4	20	4	4	0	4	8	4	4	12	28	+		0	0	0	0		32
PHF	0.25	0.50	n/a	**0.42**	0.25	0.67	0.50	**0.55**	0.25	0.25	n/a	**0.50**	0.38	0.25	0.50	**0.50**	0.86			n/a	n/a	n/a	n/a		0.47

** Calculated peak hour occurs during the first or last hour of shift and therefore may be invalid. **

MD Peak Hour Volumes

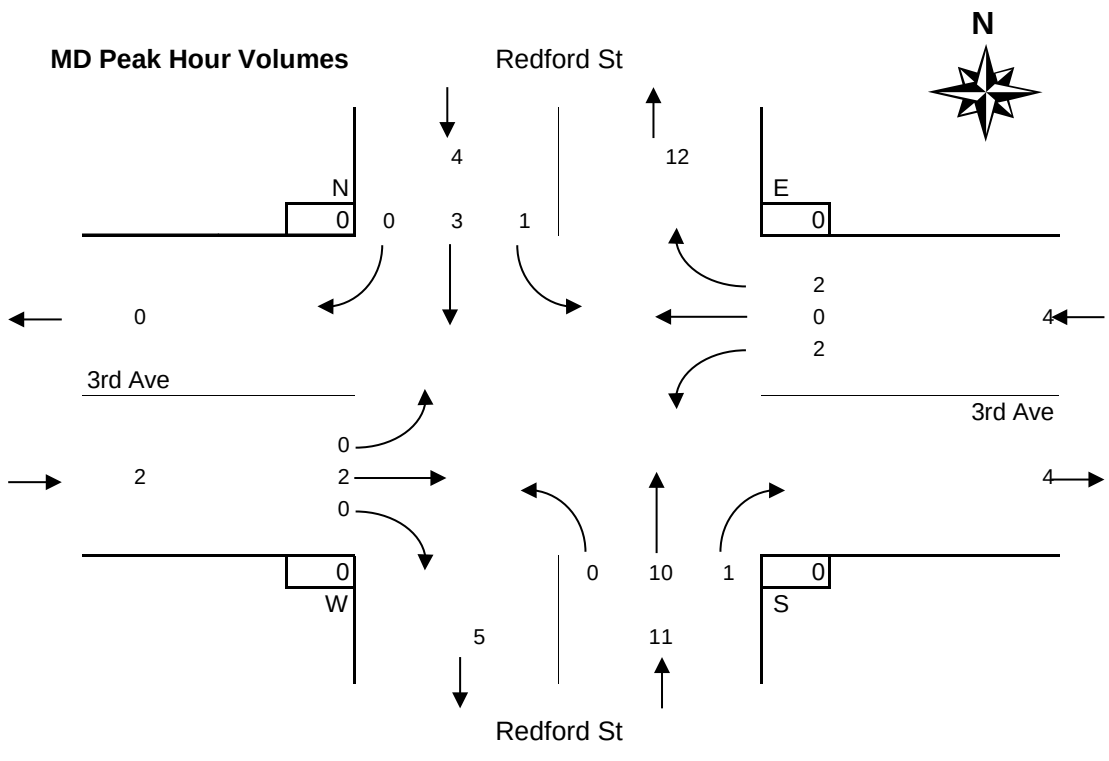

PM Peak Period
Utility Trucks

3rd Avenue @ Redford Street
Thursday, September 28, 2017

Time Period Begins	Redford St NORTH Approach				Redford St SOUTH Approach				3rd Ave WEST Approach				3rd Ave EAST Approach				Total Volume		Peak					Conflict	
	Left	Thru	Right	Total	Left	Thru	Right	Total	Left	Thru	Right	Total	Left	Thru	Right	Total	15-min	Hour		N	S	W	E	15 min	Hr
n/a																									
n/a																									
n/a																									
n/a																									
n/a																									
n/a																									
n/a																									
n/a																									
n/a																									
n/a																									
n/a																									
n/a																									
n/a																									
n/a																									
n/a																									
n/a																									
n/a																									
n/a																									
n/a																									
Total																									0
Avg Hr																									

Peak hour of the intersection

Pk Hr																		*							0
15x4																		+							0
PHF																									n/a

Peak hour of conflicting volumes for the intersection

Pk Hr																		*							0
15x4																		+							0
PHF																									n/a

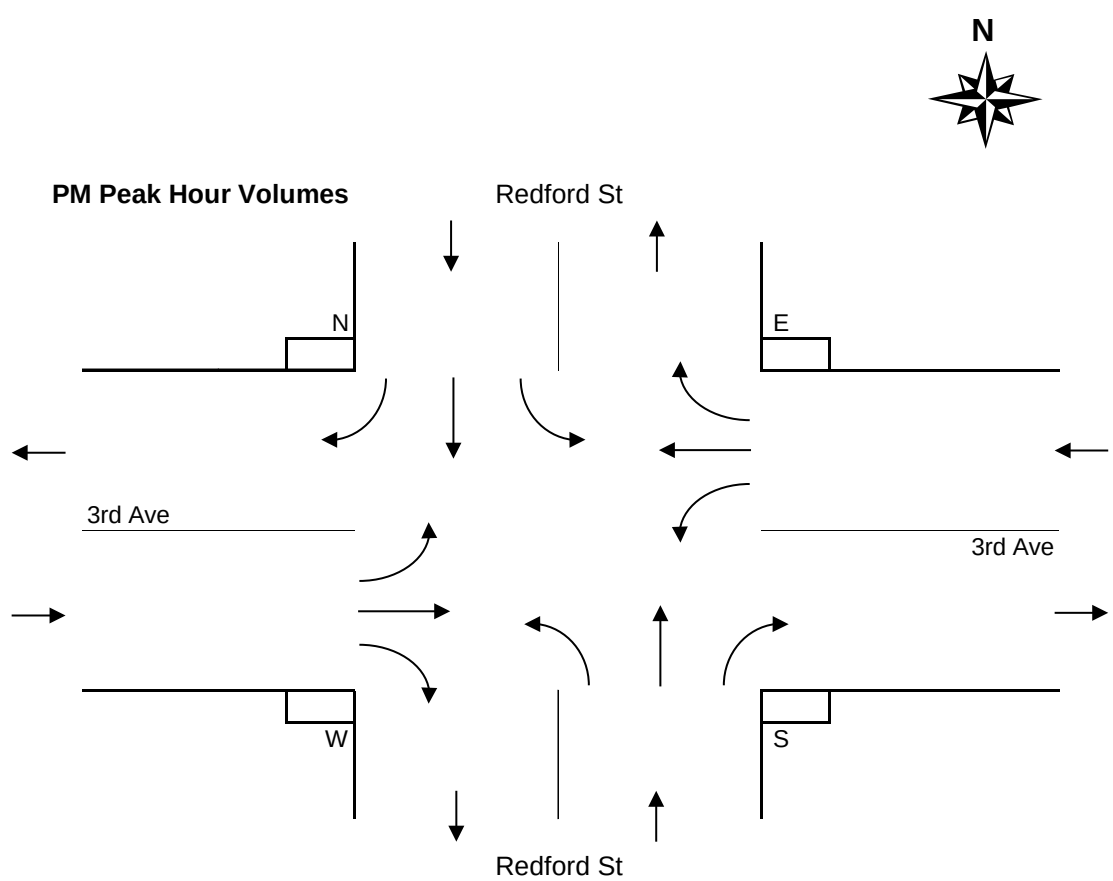

Period Hourly Averages
Utility Trucks

3rd Avenue @ Redford Street
Thursday, September 28, 2017

Entire Survey Period
8 Hours

	Redford St				Redford St				3rd Ave				3rd Ave							
	NORTH Approach				SOUTH Approach				WEST Approach				EAST Approach				Total			
	Left	Thru	Right	Total	Left	Thru	Right	Total	Left	Thru	Right	Total	Left	Thru	Right	Total	Volume	N	S	W	E
Total	8	41	0	**49**	6	56	18	**80**	2	4	4	**10**	26	4	18	**48**	187	0	0	0	0
Avg Hr	1	5	0	**6**	1	7	2	**10**	0	1	1	**1**	3	1	2	**6**	23	0	0	0	0

AM Peak Period
5 Hours

	Redford St				Redford St				3rd Ave				3rd Ave							
	NORTH Approach				SOUTH Approach				WEST Approach				EAST Approach				Total			
Totals	Left	Thru	Right	Total	Left	Thru	Right	Total	Left	Thru	Right	Total	Left	Thru	Right	Total	Volume	N	S	W	E
Period	3	24	0	**27**	5	29	14	**48**	1	1	4	**6**	19	2	13	**34**	115	0	0	0	0
Avg Hr	1	5	0	**5**	1	6	3	**10**	0	0	1	**1**	4	0	3	**7**	23	0	0	0	0

MD Peak Period
3 Hours

	Redford St				Redford St				3rd Ave				3rd Ave							
	NORTH Approach				SOUTH Approach				WEST Approach				EAST Approach				Total			
Totals	Left	Thru	Right	Total	Left	Thru	Right	Total	Left	Thru	Right	Total	Left	Thru	Right	Total	Volume	N	S	W	E
Total	5	17	0	**22**	1	27	4	**32**	1	3	0	**4**	7	2	5	**14**	72	0	0	0	0
Avg Hr	2	6	0	**7**	0	9	1	**11**	0	1	0	**1**	2	1	2	**5**	24	0	0	0	0

PM Peak Period
Hours

	Redford St				Redford St				3rd Ave				3rd Ave							
	NORTH Approach				SOUTH Approach				WEST Approach				EAST Approach				Total			
Totals	Left	Thru	Right	Total	Left	Thru	Right	Total	Left	Thru	Right	Total	Left	Thru	Right	Total	Volume	N	S	W	E
Total																					
Avg Hr																					

Average Hour Volumes

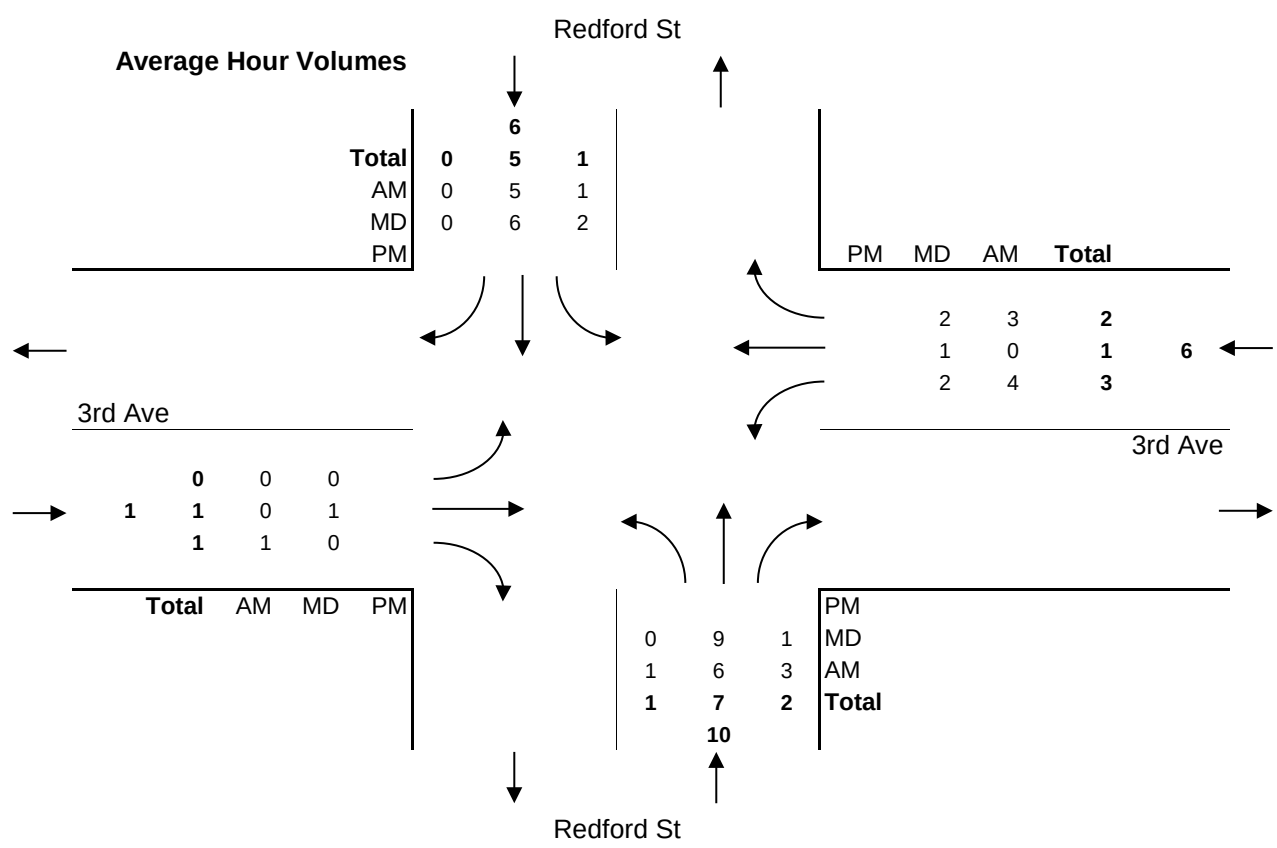

Vehicle Turning Movement Survey
With Classification

Major Route: 3rd Avenue
Minor Route: Redford Street
Municipality: Port Alberni
Filename: 1-3rd Ave @ Redford St-Sep 28, 2017.xlsx
Location #: 1

Date: September 28, 2017
Day-of-week: Thursday

East/West Route: 3rd Avenue
Intersection Type: 4-leg
Signalized?: Yes
Weather: Clear and dry

Vehicle Classifications: Regular Vehicles
Buses
Articulated Trucks
Cube Trucks
Dump Trucks
Emergency Trucks
Garbage Trucks
Logging Trucks
RVs
Utility Trucks

This data is for All Vehicles Combined

Shift	Start	End	Duration
AM	7:00	12:00	5.00
MD	12:00	15:00	3.00
PM			
Total	**7:00**		**8.00**

Notes: 24-hour clock used for reporting (15-minute increments)
North Approach - southbound vehicles approaching intersection from the north
15x4 - 15 min volume (from maximum 15 minute period of movement/approach in peak hour period [*]) x 4
Pedestrians - N indicates pedestrians crossing north approach (east/west)

Comments:

Survey Data
All Vehicles Combined

3rd Avenue @ Redford Street
Thursday, September 28, 2017

Time Period Begins	Redford St NORTH Approach				Redford St SOUTH Approach				3rd Ave WEST Approach				3rd Ave EAST Approach				Total Volume		Peak	Crosswalks			
	Left	Thru	Right	Total	Left	Thru	Right	Total	Left	Thru	Right	Total	Left	Thru	Right	Total	15-min	Hour		N	S	W	E
7:00	7	31	0	**38**	0	30	10	**40**	0	1	2	**3**	14	1	27	**42**	**123**			0	0	0	2
7:15	12	41	1	**54**	1	28	12	**41**	0	1	2	**3**	21	1	19	**41**	**139**			1	0	1	0
7:30	12	46	2	**60**	0	48	22	**70**	0	1	1	**2**	31	0	51	**82**	**214**			0	0	0	4
7:45	21	115	0	**136**	1	58	17	**76**	0	1	2	**3**	25	4	32	**61**	**276**	752		0	0	1	0
8:00	20	70	0	**90**	2	48	25	**75**	0	0	2	**2**	25	0	28	**53**	**220**	849		0	2	0	3
8:15	18	80	0	**98**	1	64	30	**95**	0	2	0	**2**	26	1	36	**63**	**258**	968		0	0	0	2
8:30	28	90	0	**118**	2	68	28	**98**	0	0	1	**1**	27	0	43	**70**	**287**	1041		0	0	0	0
8:45	23	127	0	**150**	0	76	20	**96**	0	0	1	**1**	41	0	43	**84**	**331**	1096		0	0	0	2
9:00	17	90	0	**107**	0	81	25	**106**	0	2	1	**3**	40	1	28	**69**	**285**	1161		0	0	1	2
9:15	20	81	1	**102**	1	67	28	**96**	1	2	1	**4**	17	1	22	**40**	**242**	1145		0	0	0	0
9:30	19	89	0	**108**	2	85	18	**105**	0	2	0	**2**	37	0	36	**73**	**288**	1146		0	0	0	1
9:45	11	106	1	**118**	0	82	31	**113**	1	0	0	**1**	32	1	36	**69**	**301**	1116		0	0	0	2
10:00	16	76	0	**92**	0	84	34	**118**	0	0	0	**0**	27	2	24	**53**	**263**	1094		1	2	3	7
10:15	18	86	0	**104**	0	101	40	**141**	1	2	0	**3**	33	0	24	**57**	**305**	1157		0	1	1	1
10:30	17	111	0	**128**	0	109	23	**132**	2	0	0	**2**	36	3	44	**83**	**345**	1214		0	0	0	3
10:45	20	122	0	**142**	0	93	39	**132**	0	1	0	**1**	25	2	30	**57**	**332**	1245		0	1	0	3
11:00	20	81	0	**101**	0	99	44	**143**	0	1	1	**2**	36	2	40	**78**	**324**	1306	*	0	0	0	2
11:15	26	90	0	**116**	0	119	46	**165**	1	0	0	**1**	33	2	30	**65**	**347**	1348	*	0	0	0	1
11:30	15	110	0	**125**	1	111	44	**156**	1	2	2	**5**	27	3	34	**64**	**350**	1353	*	0	0	0	1
11:45	14	114	1	**129**	0	102	39	**141**	0	1	1	**2**	38	1	46	**85**	**357**	1378	+	0	0	0	2
Total	354	1756	6	**2116**	11	1553	575	**2139**	7	19	17	**43**	591	25	673	**1289**	**5587**			2	6	7	38
12:00	37	127	4	**168**	3	126	43	**172**	0	2	1	**3**	46	0	35	**81**	**424**			0	1	0	1
12:15	26	127	1	**154**	1	129	31	**161**	0	1	0	**1**	30	0	42	**72**	**388**			0	0	0	1
12:30	25	105	1	**131**	1	96	43	**140**	1	0	1	**2**	35	2	47	**84**	**357**			0	1	0	3
12:45	24	147	0	**171**	1	128	42	**171**	0	1	0	**1**	30	2	37	**69**	**412**	1581		0	0	0	1
13:00	26	140	0	**166**	0	97	23	**120**	0	3	1	**4**	27	2	36	**65**	**355**	1512		0	0	0	0
13:15	20	124	1	**145**	0	103	35	**138**	0	2	1	**3**	31	1	37	**69**	**355**	1479		0	4	1	0
13:30	21	115	0	**136**	3	137	33	**173**	1	1	0	**2**	28	0	38	**66**	**377**	1499		0	0	1	0
13:45	25	108	1	**134**	2	117	44	**163**	3	1	0	**4**	37	1	50	**88**	**389**	1476		0	0	0	0
14:00	19	121	1	**141**	1	149	38	**188**	0	3	1	**4**	36	1	33	**70**	**403**	1524	*	0	2	0	3
14:15	30	106	0	**136**	1	136	31	**168**	0	2	1	**3**	29	1	56	**86**	**393**	1562	*	0	0	0	0
14:30	27	145	0	**172**	0	120	35	**155**	2	1	1	**4**	35	1	32	**68**	**399**	1584	*	0	1	1	2
14:45	33	131	1	**165**	0	122	38	**160**	0	3	2	**5**	28	2	49	**79**	**409**	1604	+	0	0	2	0
n/a																							
n/a																							
n/a																							
n/a																							
Total	313	1496	10	**1819**	13	1460	436	**1909**	7	20	9	**36**	392	13	492	**897**	**4661**			0	9	5	11
n/a																							
n/a																							
n/a																							
n/a																							
n/a																							
n/a																							
n/a																							
n/a																							
n/a																							
n/a																							
n/a																							
n/a																							
n/a																							
n/a																							
n/a																							
n/a																							
n/a																							
n/a																							
Total																							

AM Peak Period
All Vehicles Combined

3rd Avenue @ Redford Street
Thursday, September 28, 2017

Time Period Begins	Redford St NORTH Approach				Redford St SOUTH Approach				3rd Ave WEST Approach				3rd Ave EAST Approach				Total Volume		Peak	Crosswalks				Conflict	
	Left	Thru	Right	Total	Left	Thru	Right	Total	Left	Thru	Right	Total	Left	Thru	Right	Total	15-min	Hour		N	S	W	E	15 min	Hr
7:00	7	31	0	38	0	30	10	40	0	1	2	3	14	1	27	42	123			0	0	0	2	75	
7:15	12	41	1	54	1	28	12	41	0	1	2	3	21	1	19	41	139			1	0	1	0	76	
7:30	12	46	2	60	0	48	22	70	0	1	1	2	31	0	51	82	214			0	0	0	4	133	
7:45	21	115	0	136	1	58	17	76	0	1	2	3	25	4	32	61	276	752		0	0	1	0	152	436
8:00	20	70	0	90	2	48	25	75	0	0	2	2	25	0	28	53	220	849		0	2	0	3	121	482
8:15	18	80	0	98	1	64	30	95	0	2	0	2	26	1	36	63	258	968		0	0	0	2	149	555
8:30	28	90	0	118	2	68	28	98	0	0	1	1	27	0	43	70	287	1041		0	0	0	0	167	589
8:45	23	127	0	150	0	76	20	96	0	0	1	1	41	0	43	84	331	1096		0	0	0	2	170	607
9:00	17	90	0	107	0	81	25	106	0	2	1	3	40	1	28	69	285	1161		0	0	1	2	166	652
9:15	20	81	1	102	1	67	28	96	1	2	1	4	17	1	22	40	242	1145		0	0	0	0	139	642
9:30	19	89	0	108	2	85	18	105	0	2	0	2	37	0	36	73	288	1146		0	0	0	1	161	636
9:45	11	106	1	118	0	82	31	113	1	0	0	1	32	1	36	69	301	1116		0	0	0	2	162	628
10:00	16	76	0	92	0	84	34	118	0	0	0	0	27	2	24	53	263	1094		1	2	3	7	161	623
10:15	18	86	0	104	0	101	40	141	1	2	0	3	33	0	24	57	305	1157		0	1	1	1	194	678
10:30	17	111	0	128	0	109	23	132	2	0	0	2	36	3	44	83	345	1214		0	0	0	3	198	715
10:45	20	122	0	142	0	93	39	132	0	1	0	1	25	2	30	57	332	1245		0	1	0	3	184	737
11:00	20	81	0	101	0	99	44	143	0	1	1	2	36	2	40	78	324	1306	*	0	0	0	2	205	781
11:15	26	90	0	116	0	119	46	165	1	0	0	1	33	2	30	65	347	1348	*	0	0	0	1	224	811
11:30	15	110	0	125	1	111	44	156	1	2	2	5	27	3	34	64	350	1353	*	0	0	0	1	208	821
11:45	14	114	1	129	0	102	39	141	0	1	1	2	38	1	46	85	357	1378	+	0	0	0	2	202	839
Total	354	1756	6	**2116**	11	1553	575	**2139**	7	19	17	**43**	591	25	673	**1289**	5587			2	6	7	38		3187
Avg Hr	71	351	1	**423**	2	311	115	**428**	1	4	3	**9**	118	5	135	**258**	1117			0	1	1	8		

Peak hour of the intersection

Pk Hr	75	395	1	471	1	431	173	605	2	4	4	10	134	8	150	292	1378	*		0	0	0	6		839
15x4	104	456	4	516	4	476	184	660	4	8	8	20	152	12	184	340	1428	+		0	0	0	8		964
PHF	0.72	0.87	0.25	**0.91**	0.25	0.91	0.94	**0.92**	0.50	0.50	0.50	**0.50**	0.88	0.67	0.82	**0.86**	0.96			n/a	n/a	n/a	0.75		0.87

Peak hour of conflicting volumes for the intersection

Pk Hr	75	395	1	471	1	431	173	605	2	4	4	10	134	8	150	292	1378	*		0	0	0	6		839
15x4	104	456	4	516	4	476	184	660	4	8	8	20	152	12	184	340	1428	+		0	0	0	8		964
PHF	0.72	0.87	0.25	**0.91**	0.25	0.91	0.94	**0.92**	0.50	0.50	0.50	**0.50**	0.88	0.67	0.82	**0.86**	0.96			n/a	n/a	n/a	0.75		0.87

** Calculated peak hour occurs during the first or last hour of shift and therefore may be invalid. **

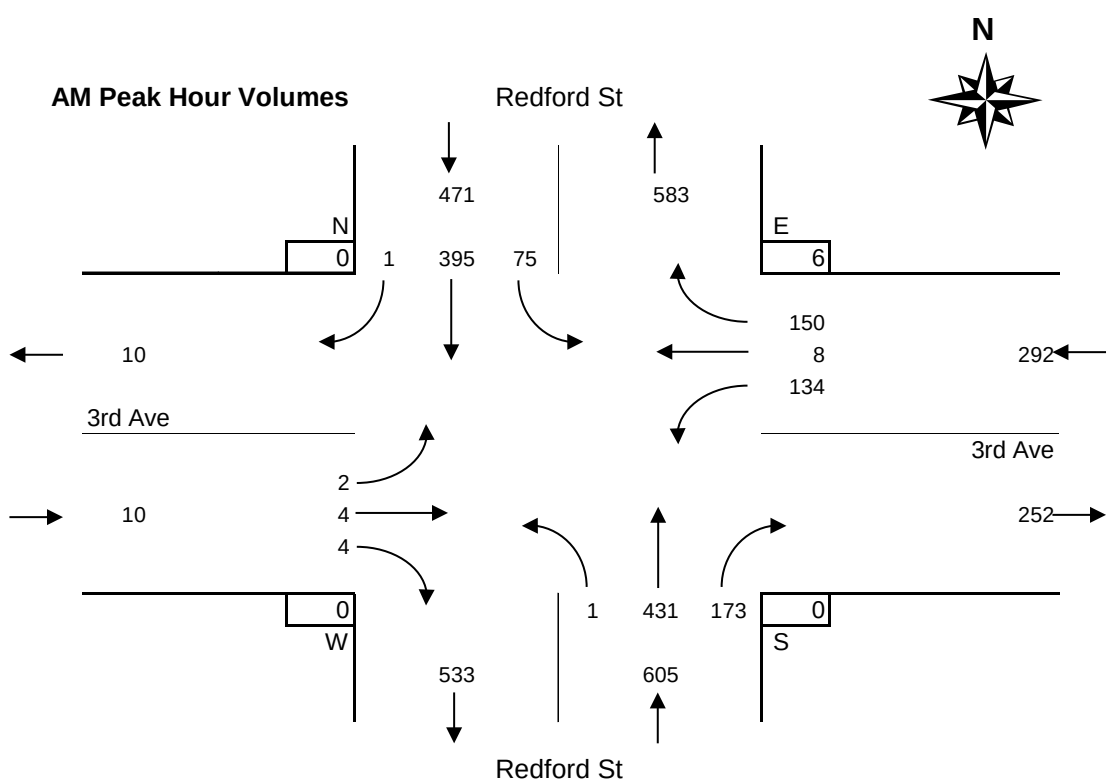

MD Peak Period
All Vehicles Combined

3rd Avenue @ Redford Street
Thursday, September 28, 2017

Time Period Begins	Redford St NORTH Approach				Redford St SOUTH Approach				3rd Ave WEST Approach				3rd Ave EAST Approach				Total Volume		Peak	Crosswalks				Conflict	
	Left	Thru	Right	Total	Left	Thru	Right	Total	Left	Thru	Right	Total	Left	Thru	Right	Total	15-min	Hour		N	S	W	E	15 min	Hr
12:00	37	127	4	168	3	126	43	172	0	2	1	3	46	0	35	81	424			0	1	0	1	255	
12:15	26	127	1	154	1	129	31	161	0	1	0	1	30	0	42	72	388			0	0	0	1	228	
12:30	25	105	1	131	1	96	43	140	1	0	1	2	35	2	47	84	357			0	1	0	3	214	
12:45	24	147	0	171	1	128	42	171	0	1	0	1	30	2	37	69	412	1581		0	0	0	1	233	930
13:00	26	140	0	166	0	97	23	120	0	3	1	4	27	2	36	65	355	1512		0	0	0	0	184	859
13:15	20	124	1	145	0	103	35	138	0	2	1	3	31	1	37	69	355	1479		0	4	1	0	196	827
13:30	21	115	0	136	3	137	33	173	1	1	0	2	28	0	38	66	377	1499		0	0	1	0	230	843
13:45	25	108	1	134	2	117	44	163	3	1	0	4	37	1	50	88	389	1476		0	0	0	0	240	850
14:00	19	121	1	141	1	149	38	188	0	3	1	4	36	1	33	70	403	1524	*	0	2	0	3	246	912
14:15	30	106	0	136	1	136	31	168	0	2	1	3	29	1	56	86	393	1562	*	0	0	0	0	254	970
14:30	27	145	0	172	0	120	35	155	2	1	1	4	35	1	32	68	399	1584	*	0	1	1	2	219	959
14:45	33	131	1	165	0	122	38	160	0	3	2	5	28	2	49	79	409	1604	+	0	0	2	0	244	963
n/a																									
n/a																									
n/a																									
n/a																									
Total	313	1496	10	**1819**	13	1460	436	**1909**	7	20	9	**36**	392	13	492	**897**	4661			0	9	5	11		2721
Avg Hr	104	499	3	**606**	4	487	145	**636**	2	7	3	**12**	131	4	164	**299**	1554			0	3	2	4		

Peak hour of the intersection

Pk Hr	109	503	2	614	2	527	142	671	2	9	5	16	128	5	170	303	1604	*		0	3	3	5		955
15x4	132	580	4	688	4	596	152	752	8	12	8	20	144	8	224	344	1636	+		0	8	8	12		1120
PHF	0.83	0.87	0.50	**0.89**	0.50	0.88	0.93	**0.89**	0.25	0.75	0.63	**0.80**	0.89	0.63	0.76	**0.88**	0.98			n/a	0.38	0.38	0.42		0.85

Peak hour of conflicting volumes for the intersection

Pk Hr	95	450	2	547	7	539	146	692	4	7	2	13	130	3	177	310	1562	*		0	2	1	3		964
15x4	120	484	4	564	12	596	176	752	12	12	4	16	148	4	224	352	1612	+		0	8	4	12		1132
PHF	0.79	0.93	0.50	**0.97**	0.58	0.90	0.83	**0.92**	0.33	0.58	0.50	**0.81**	0.88	0.75	0.79	**0.88**	0.97			n/a	0.25	0.25	0.25		0.85

** Calculated peak hour occurs during the first or last hour of shift and therefore may be invalid. **

MD Peak Hour Volumes

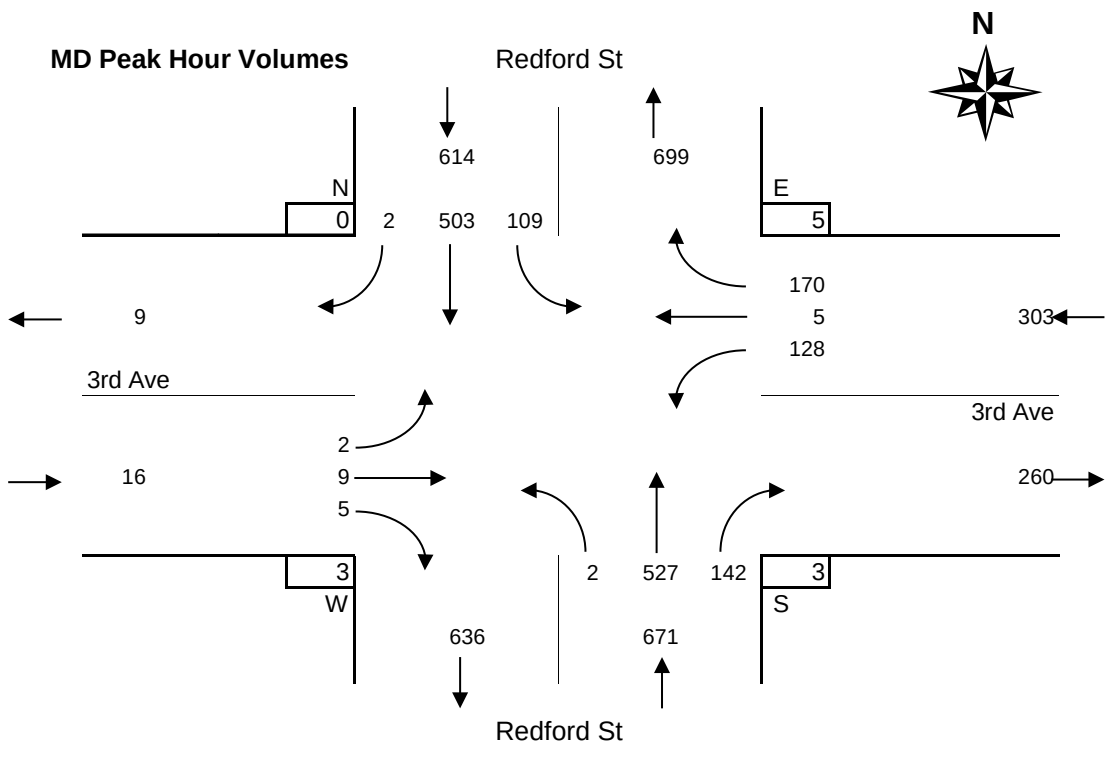

PM Peak Period
All Vehicles Combined

3rd Avenue @ Redford Street
Thursday, September 28, 2017

Time Period Begins	Redford St NORTH Approach				Redford St SOUTH Approach				3rd Ave WEST Approach				3rd Ave EAST Approach				Total Volume		Peak	Crosswalks				Conflict	
	Left	Thru	Right	Total	Left	Thru	Right	Total	Left	Thru	Right	Total	Left	Thru	Right	Total	15-min	Hour		N	S	W	E	15 min	Hr
n/a																									
n/a																									
n/a																									
n/a																									
n/a																									
n/a																									
n/a																									
n/a																									
n/a																									
n/a																									
n/a																									
n/a																									
n/a																									
n/a																									
n/a																									
n/a																									
n/a																									
n/a																									
n/a																									
Total																									0
Avg Hr																									

Peak hour of the intersection

Pk Hr																		*							0
15x4																		+							0
PHF																									n/a

Peak hour of conflicting volumes for the intersection

Pk Hr																		*							0
15x4																		+							0
PHF																									n/a

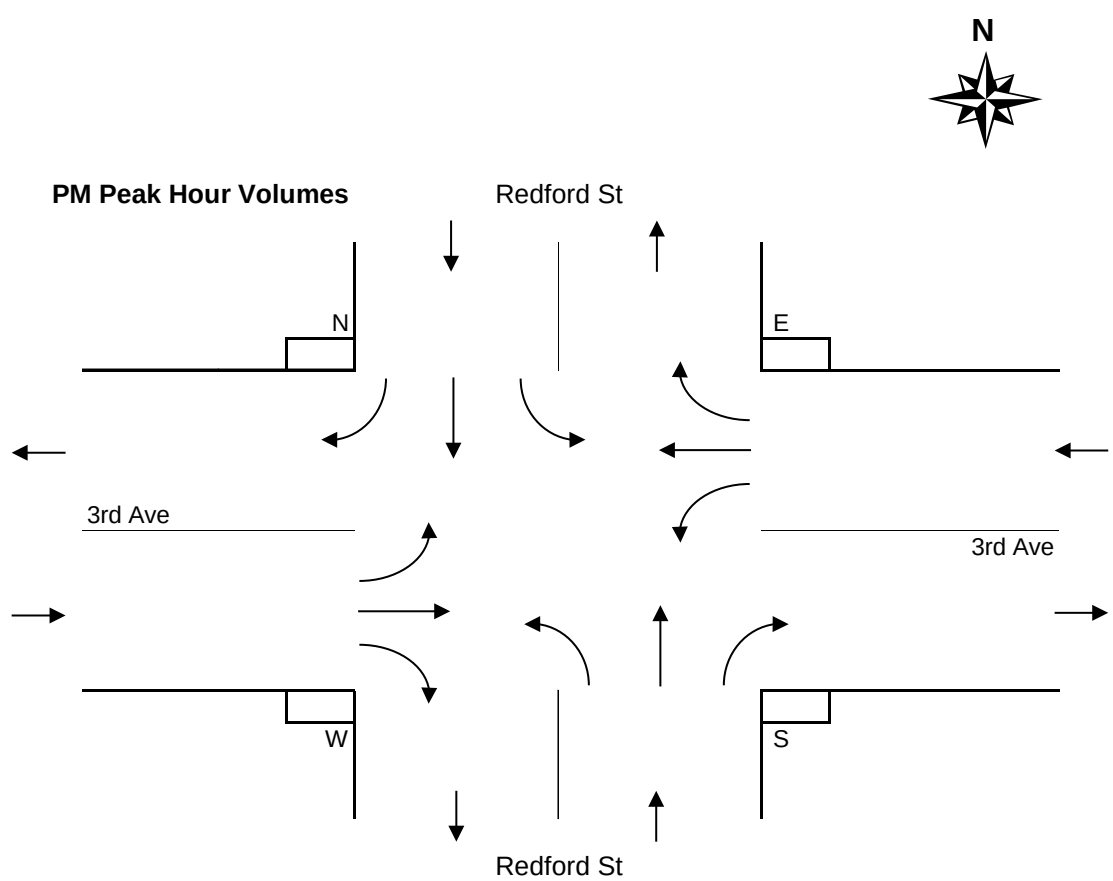

Period Hourly Averages
All Vehicles Combined

3rd Avenue @ Redford Street
Thursday, September 28, 2017

Entire Survey Period
8 Hours

	Redford St				Redford St				3rd Ave				3rd Ave				Total	Crosswalks			
	NORTH Approach				SOUTH Approach				WEST Approach				EAST Approach				Volume				
	Left	Thru	Right	Total	Left	Thru	Right	Total	Left	Thru	Right	Total	Left	Thru	Right	Total		N	S	W	E
Total	667	3252	16	**3935**	24	3013	1011	**4048**	14	39	26	**79**	983	38	1165	**2186**	10248	2	15	12	49
Avg Hr	83	407	2	**492**	3	377	126	**506**	2	5	3	**10**	123	5	146	**273**	1281	0	2	2	6

AM Peak Period
5 Hours

	Redford St				Redford St				3rd Ave				3rd Ave				Total	Crosswalks			
	NORTH Approach				SOUTH Approach				WEST Approach				EAST Approach				Volume				
Totals	Left	Thru	Right	Total	Left	Thru	Right	Total	Left	Thru	Right	Total	Left	Thru	Right	Total		N	S	W	E
Period	354	1756	6	**2116**	11	1553	575	**2139**	7	19	17	**43**	591	25	673	**1289**	5587	2	6	7	38
Avg Hr	71	351	1	**423**	2	311	115	**428**	1	4	3	**9**	118	5	135	**258**	1117	0	1	1	8

MD Peak Period
3 Hours

	Redford St				Redford St				3rd Ave				3rd Ave				Total	Crosswalks			
	NORTH Approach				SOUTH Approach				WEST Approach				EAST Approach				Volume				
Totals	Left	Thru	Right	Total	Left	Thru	Right	Total	Left	Thru	Right	Total	Left	Thru	Right	Total		N	S	W	E
Total	313	1496	10	**1819**	13	1460	436	**1909**	7	20	9	**36**	392	13	492	**897**	4661	0	9	5	11
Avg Hr	104	499	3	**606**	4	487	145	**636**	2	7	3	**12**	131	4	164	**299**	1554	0	3	2	4

PM Peak Period
Hours

	Redford St				Redford St				3rd Ave				3rd Ave				Total	Crosswalks			
	NORTH Approach				SOUTH Approach				WEST Approach				EAST Approach				Volume				
Totals	Left	Thru	Right	Total	Left	Thru	Right	Total	Left	Thru	Right	Total	Left	Thru	Right	Total		N	S	W	E
Total																					
Avg Hr																					

Average Hour Volumes

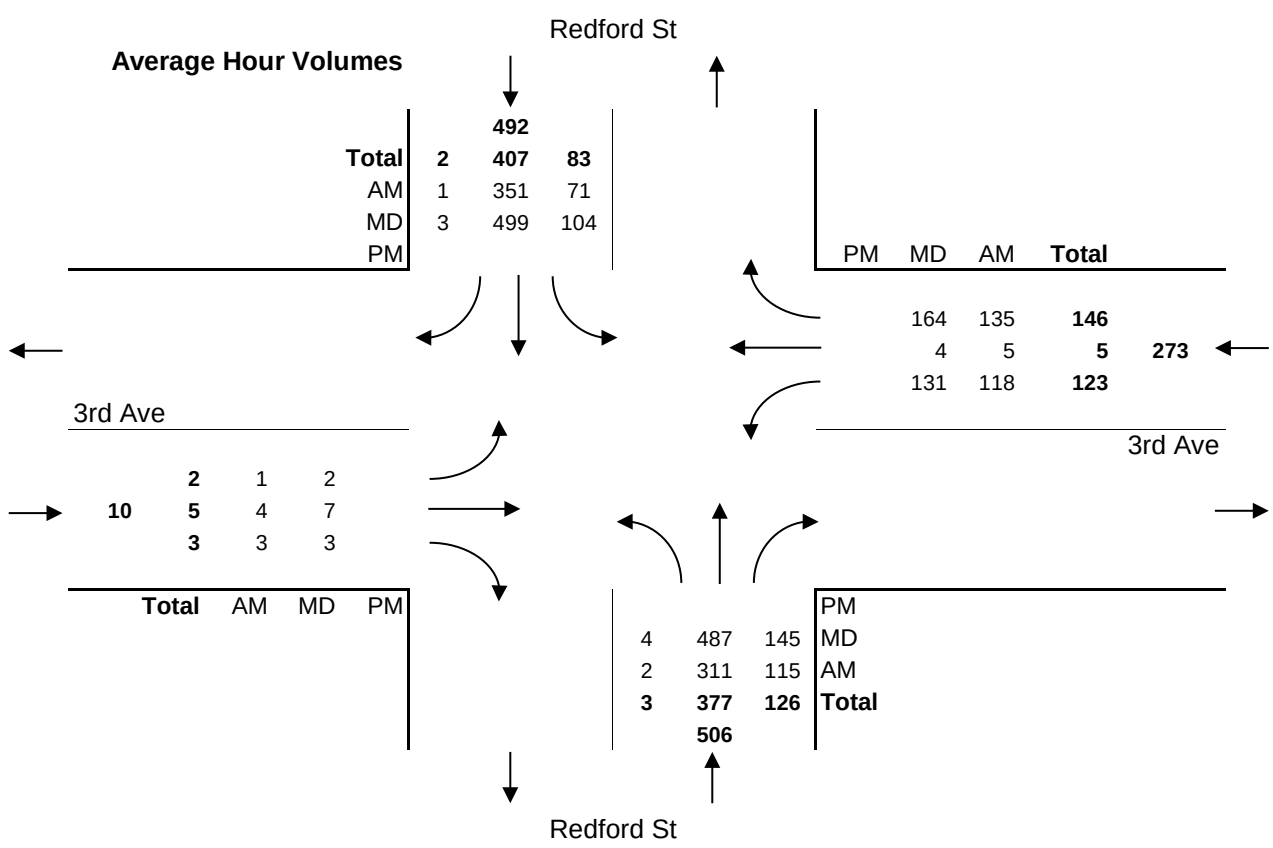

Data summarized for input into Synchro/HCS

All Vehicles Combined

AM

	EBL	EBT	EBR	WBL	WBT	WBR	NBL	NBT	NBR	SBL	SBT	SBR
Traffic Volume (vph)	2	4	4	134	8	150	1	431	173	75	395	1
Peak Hour Factor	0.50	0.50	0.50	0.88	0.67	0.82	0.25	0.91	0.94	0.72	0.87	0.25
Total Volume	7	19	17	591	25	673	11	1553	575	354	1756	6
% of Total Vehicles	100%	100%	100%	100%	100%	100%	100%	100%	100%	100%	100%	100%

MD

	EBL	EBT	EBR	WBL	WBT	WBR	NBL	NBT	NBR	SBL	SBT	SBR
Traffic Volume (vph)	2	9	5	128	5	170	2	527	142	109	503	2
Peak Hour Factor	0.25	0.75	0.63	0.89	0.63	0.76	0.50	0.88	0.93	0.83	0.87	0.50
Total Volume	7	20	9	392	13	492	13	1460	436	313	1496	10
% of Total Vehicles	100%	100%	100%	100%	100%	100%	100%	100%	100%	100%	100%	100%

PM

	EBL	EBT	EBR	WBL	WBT	WBR	NBL	NBT	NBR	SBL	SBT	SBR
Traffic Volume (vph)												
Peak Hour Factor												
Total Volume												
% of Total Vehicles	n/a	n/a	n/a	n/a	n/a	n/a	n/a	n/a	n/a	n/a	n/a	n/a

Regular Vehicles

AM

	EBL	EBT	EBR	WBL	WBT	WBR	NBL	NBT	NBR	SBL	SBT	SBR
Traffic Volume (vph)	2	1	3	125	3	145	1	409	158	72	380	1
Peak Hour Factor	0.50	0.25	0.38	0.87	0.38	0.84	0.25	0.88	0.86	0.75	0.86	0.25
Total Volume	6	7	8	532	10	647	6	1458	515	340	1656	4
% of Total Vehicles	86%	37%	47%	90%	40%	96%	55%	94%	90%	96%	94%	67%

MD

	EBL	EBT	EBR	WBL	WBT	WBR	NBL	NBT	NBR	SBL	SBT	SBR
Traffic Volume (vph)	2	3	5	121	1	163	2	499	128	107	484	2
Peak Hour Factor	0.25	0.38	0.63	0.95	0.25	0.75	0.50	0.88	0.91	0.84	0.86	0.50
Total Volume	6	6	9	368	3	479	12	1384	399	296	1424	9
% of Total Vehicles	86%	30%	100%	94%	23%	97%	92%	95%	92%	95%	95%	90%

PM

	EBL	EBT	EBR	WBL	WBT	WBR	NBL	NBT	NBR	SBL	SBT	SBR
Traffic Volume (vph)												
Peak Hour Factor												
Total Volume												
% of Total Vehicles	n/a	n/a	n/a	n/a	n/a	n/a	n/a	n/a	n/a	n/a	n/a	n/a

Buses

AM

	EBL	EBT	EBR	WBL	WBT	WBR	NBL	NBT	NBR	SBL	SBT	SBR
Traffic Volume (vph)	0	0	0	1	0	2	0	0	3	1	0	0
Peak Hour Factor	n/a	n/a	n/a	0.25	n/a	0.25	n/a	n/a	0.38	0.25	n/a	n/a
Total Volume	0	0	0	1	1	6	0	5	7	4	6	1
% of Total Vehicles	0%	0%	0%	0%	4%	1%	0%	0%	1%	1%	0%	17%

MD

	EBL	EBT	EBR	WBL	WBT	WBR	NBL	NBT	NBR	SBL	SBT	SBR
Traffic Volume (vph)	0	0	0	1	0	1	0	2	1	0	0	0
Peak Hour Factor	n/a	n/a	n/a	0.25	n/a	0.25	n/a	0.50	0.25	n/a	n/a	n/a
Total Volume	0	0	0	2	0	2	0	5	5	3	4	0
% of Total Vehicles	0%	0%	0%	1%	0%	0%	0%	0%	1%	1%	0%	0%

PM

	EBL	EBT	EBR	WBL	WBT	WBR	NBL	NBT	NBR	SBL	SBT	SBR
Traffic Volume (vph)												
Peak Hour Factor												
Total Volume												
% of Total Vehicles	n/a	n/a	n/a	n/a	n/a	n/a	n/a	n/a	n/a	n/a	n/a	n/a

Articulated Trucks

AM

	EBL	EBT	EBR	WBL	WBT	WBR	NBL	NBT	NBR	SBL	SBT	SBR
Traffic Volume (vph)	0	3	0	7	4	0	0	4	3	0	1	0
Peak Hour Factor	n/a	0.75	n/a	0.88	0.50	n/a	n/a	0.50	0.75	n/a	0.25	n/a
Total Volume	0	11	3	31	11	2	0	7	25	2	7	0
% of Total Vehicles	0%	58%	18%	5%	44%	0%	0%	0%	4%	1%	0%	0%

MD

	EBL	EBT	EBR	WBL	WBT	WBR	NBL	NBT	NBR	SBL	SBT	SBR
Traffic Volume (vph)	0	4	0	3	3	3	0	1	9	0	5	0
Peak Hour Factor	n/a	0.50	n/a	0.38	0.75	0.75	n/a	0.25	0.56	n/a	0.42	n/a
Total Volume	0	11	0	13	7	3	0	6	22	2	8	1
% of Total Vehicles	0%	55%	0%	3%	54%	1%	0%	0%	5%	1%	1%	10%

PM

	EBL	EBT	EBR	WBL	WBT	WBR	NBL	NBT	NBR	SBL	SBT	SBR
Traffic Volume (vph)												
Peak Hour Factor												
Total Volume												
% of Total Vehicles	n/a	n/a	n/a	n/a	n/a	n/a	n/a	n/a	n/a	n/a	n/a	n/a

Cube Trucks

AM

	EBL	EBT	EBR	WBL	WBT	WBR	NBL	NBT	NBR	SBL	SBT	SBR
Traffic Volume (vph)	0	0	1	0	0	1	0	6	3	0	4	0

Peak Hour Factor	n/a	n/a	0.25	n/a	n/a	0.25	n/a	0.50	0.38	n/a	0.50	n/a
Total Volume	0	0	2	4	1	5	0	14	12	4	17	1
% of Total Vehicles	0%	0%	12%	1%	4%	1%	0%	1%	2%	1%	1%	17%

MD

	EBL	EBT	EBR	WBL	WBT	WBR	NBL	NBT	NBR	SBL	SBT	SBR
Traffic Volume (vph)	0	0	0	1	0	0	0	4	0	1	0	0
Peak Hour Factor	n/a	n/a	n/a	0.25	n/a	n/a	n/a	0.50	n/a	0.25	n/a	n/a
Total Volume	0	0	0	2	0	2	0	10	1	6	7	0
% of Total Vehicles	0%	0%	0%	1%	0%	0%	0%	1%	0%	2%	0%	0%

PM

	EBL	EBT	EBR	WBL	WBT	WBR	NBL	NBT	NBR	SBL	SBT	SBR
Traffic Volume (vph)												
Peak Hour Factor												
Total Volume												
% of Total Vehicles	n/a	n/a	n/a	n/a	n/a	n/a	n/a	n/a	n/a	n/a	n/a	n/a

Dump Trucks

AM

	EBL	EBT	EBR	WBL	WBT	WBR	NBL	NBT	NBR	SBL	SBT	SBR
Traffic Volume (vph)	0	0	0	0	0	0	0	5	0	0	4	0
Peak Hour Factor	n/a	n/a	n/a	n/a	n/a	n/a	n/a	0.63	n/a	n/a	0.33	n/a
Total Volume	0	0	0	1	0	0	0	20	2	0	26	0
% of Total Vehicles	0%	0%	0%	0%	0%	0%	0%	1%	0%	0%	1%	0%

MD

	EBL	EBT	EBR	WBL	WBT	WBR	NBL	NBT	NBR	SBL	SBT	SBR
Traffic Volume (vph)	0	0	0	0	1	0	0	6	1	0	7	0
Peak Hour Factor	n/a	n/a	n/a	n/a	0.25	n/a	n/a	0.50	0.25	n/a	0.58	n/a
Total Volume	0	0	0	0	1	0	0	15	1	0	17	0
% of Total Vehicles	0%	0%	0%	0%	8%	0%	0%	1%	0%	0%	1%	0%

PM

	EBL	EBT	EBR	WBL	WBT	WBR	NBL	NBT	NBR	SBL	SBT	SBR
Traffic Volume (vph)												
Peak Hour Factor												
Total Volume												
% of Total Vehicles	n/a	n/a	n/a	n/a	n/a	n/a	n/a	n/a	n/a	n/a	n/a	n/a

Emergency Trucks

AM

	EBL	EBT	EBR	WBL	WBT	WBR	NBL	NBT	NBR	SBL	SBT	SBR
Traffic Volume (vph)	0	0	0	0	0	0	0	0	0	0	0	0
Peak Hour Factor	n/a	n/a	n/a	n/a	n/a	n/a	n/a	n/a	n/a	n/a	n/a	n/a
Total Volume	0	0	0	0	0	0	0	0	0	0	0	0
% of Total Vehicles	0%	0%	0%	0%	0%	0%	0%	0%	0%	0%	0%	0%

MD

	EBL	EBT	EBR	WBL	WBT	WBR	NBL	NBT	NBR	SBL	SBT	SBR
Traffic Volume (vph)	0	0	0	0	0	0	0	0	0	0	0	0
Peak Hour Factor	n/a	n/a	n/a	n/a	n/a	n/a	n/a	n/a	n/a	n/a	n/a	n/a
Total Volume	0	0	0	0	0	0	0	0	0	0	0	0
% of Total Vehicles	0%	0%	0%	0%	0%	0%	0%	0%	0%	0%	0%	0%

PM

	EBL	EBT	EBR	WBL	WBT	WBR	NBL	NBT	NBR	SBL	SBT	SBR
Traffic Volume (vph)												
Peak Hour Factor												
Total Volume												
% of Total Vehicles	n/a	n/a	n/a	n/a	n/a	n/a	n/a	n/a	n/a	n/a	n/a	n/a

Garbage Trucks

AM

	EBL	EBT	EBR	WBL	WBT	WBR	NBL	NBT	NBR	SBL	SBT	SBR
Traffic Volume (vph)	0	0	0	0	0	0	0	0	0	0	0	0
Peak Hour Factor	n/a	n/a	n/a	n/a	n/a	n/a	n/a	n/a	n/a	n/a	n/a	n/a
Total Volume	0	0	0	3	0	0	0	1	0	1	0	0
% of Total Vehicles	0%	0%	0%	1%	0%	0%	0%	0%	0%	0%	0%	0%

MD

	EBL	EBT	EBR	WBL	WBT	WBR	NBL	NBT	NBR	SBL	SBT	SBR
Traffic Volume (vph)	0	0	0	0	0	0	0	0	1	0	0	0
Peak Hour Factor	n/a	n/a	n/a	n/a	n/a	n/a	n/a	n/a	0.25	n/a	n/a	n/a
Total Volume	0	0	0	0	0	0	0	1	2	0	0	0
% of Total Vehicles	0%	0%	0%	0%	0%	0%	0%	0%	0%	0%	0%	0%

PM

	EBL	EBT	EBR	WBL	WBT	WBR	NBL	NBT	NBR	SBL	SBT	SBR
Traffic Volume (vph)												
Peak Hour Factor												
Total Volume												
% of Total Vehicles	n/a	n/a	n/a	n/a	n/a	n/a	n/a	n/a	n/a	n/a	n/a	n/a

Logging Trucks

AM

	EBL	EBT	EBR	WBL	WBT	WBR	NBL	NBT	NBR	SBL	SBT	SBR
Traffic Volume (vph)	0	0	0	0	0	0	0	2	0	0	2	0
Peak Hour Factor	n/a	n/a	n/a	n/a	n/a	n/a	n/a	0.50	n/a	n/a	0.50	n/a
Total Volume	0	0	0	0	0	0	0	17	0	0	18	0
% of Total Vehicles	0%	0%	0%	0%	0%	0%	0%	1%	0%	0%	1%	0%

MD

	EBL	EBT	EBR	WBL	WBT	WBR	NBL	NBT	NBR	SBL	SBT	SBR
Traffic Volume (vph)	0	0	0	0	0	0	0	2	0	0	4	0
Peak Hour Factor	n/a	n/a	n/a	n/a	n/a	n/a	n/a	0.25	n/a	n/a	0.33	n/a

Total Volume	0	0	0	0	0	0	0	7	0	0	15	0
% of Total Vehicles	0%	0%	0%	0%	0%	0%	0%	0%	0%	0%	1%	0%

PM

	EBL	EBT	EBR	WBL	WBT	WBR	NBL	NBT	NBR	SBL	SBT	SBR
Traffic Volume (vph)												
Peak Hour Factor												
Total Volume												
% of Total Vehicles	n/a	n/a	n/a	n/a	n/a	n/a	n/a	n/a	n/a	n/a	n/a	n/a

RVs

AM

	EBL	EBT	EBR	WBL	WBT	WBR	NBL	NBT	NBR	SBL	SBT	SBR
Traffic Volume (vph)	0	0	0	0	0	0	0	1	0	0	0	0
Peak Hour Factor	n/a	n/a	n/a	n/a	n/a	n/a	n/a	0.25	n/a	n/a	n/a	n/a
Total Volume	0	0	0	0	0	0	0	2	0	0	2	0
% of Total Vehicles	0%	0%	0%	0%	0%	0%	0%	0%	0%	0%	0%	0%

MD

	EBL	EBT	EBR	WBL	WBT	WBR	NBL	NBT	NBR	SBL	SBT	SBR
Traffic Volume (vph)	0	0	0	0	0	1	0	3	1	0	0	0
Peak Hour Factor	n/a	n/a	n/a	n/a	n/a	0.25	n/a	0.38	0.25	n/a	n/a	n/a
Total Volume	0	0	0	0	0	1	0	5	2	1	4	0
% of Total Vehicles	0%	0%	0%	0%	0%	0%	0%	0%	0%	0%	0%	0%

PM

	EBL	EBT	EBR	WBL	WBT	WBR	NBL	NBT	NBR	SBL	SBT	SBR
Traffic Volume (vph)												
Peak Hour Factor												
Total Volume												
% of Total Vehicles	n/a	n/a	n/a	n/a	n/a	n/a	n/a	n/a	n/a	n/a	n/a	n/a

Utility Trucks

AM

	EBL	EBT	EBR	WBL	WBT	WBR	NBL	NBT	NBR	SBL	SBT	SBR
Traffic Volume (vph)	0	0	0	1	1	2	0	4	6	2	4	0
Peak Hour Factor	n/a	n/a	n/a	0.25	0.25	0.50	n/a	1.00	0.75	0.50	0.50	n/a
Total Volume	1	1	4	19	2	13	5	29	14	3	24	0
% of Total Vehicles	14%	5%	24%	3%	8%	2%	45%	2%	2%	1%	1%	0%

MD

	EBL	EBT	EBR	WBL	WBT	WBR	NBL	NBT	NBR	SBL	SBT	SBR
Traffic Volume (vph)	0	2	0	2	0	2	0	10	1	1	3	0
Peak Hour Factor	n/a	0.50	n/a	0.25	n/a	0.50	n/a	0.63	0.25	0.25	0.75	n/a
Total Volume	1	3	0	7	2	5	1	27	4	5	17	0
% of Total Vehicles	14%	15%	0%	2%	15%	1%	8%	2%	1%	2%	1%	0%

PM

	EBL	EBT	EBR	WBL	WBT	WBR	NBL	NBT	NBR	SBL	SBT	SBR
Traffic Volume (vph)												
Peak Hour Factor												
Total Volume												
% of Total Vehicles	n/a	n/a	n/a	n/a	n/a	n/a	n/a	n/a	n/a	n/a	n/a	n/a