Vehicle Turning Movement Survey
With Classification

Major Route: 3rd Avenue
Minor Route: Redford Street
Municipality: Port Alberni
Filename: 1-3rd Ave @ Redford St-Sep 27, 2017.xlsx
Location #: 1

Date: September 27, 2017
Day-of-week: Wednesday

East/West Route: 3rd Avenue
Intersection Type: 4-leg
Signalized?: Yes
Weather: Clear and dry

Vehicle Classifications: Regular Vehicles
Buses
Articulated Trucks
Cube Trucks
Dump Trucks
Emergency Trucks
Garbage Trucks
Logging Trucks
RVs
Utility Trucks

This data is for Regular Vehicles

Shift	Start	End	Duration
AM	7:00	12:00	5.00
MD	12:00	15:00	3.00
PM			
Total	**7:00**		**8.00**

Notes: 24-hour clock used for reporting (15-minute increments)
North Approach - southbound vehicles approaching intersection from the north
15x4 - 15 min volume (from maximum 15 minute period of movement/approach in peak hour period [*]) x 4
Pedestrians - N indicates pedestrians crossing north approach (east/west)

Comments:

Survey Data
Regular Vehicles

3rd Avenue @ Redford Street
Wednesday, September 27, 2017

Time Period Begins	Redford St NORTH Approach				Redford St SOUTH Approach				3rd Ave WEST Approach				3rd Ave EAST Approach				Total Volume		Peak	Crosswalks			
	Left	Thru	Right	Total	Left	Thru	Right	Total	Left	Thru	Right	Total	Left	Thru	Right	Total	15-min	Hour		N	S	W	E
7:00	10	26	0	**36**	0	36	6	**42**	1	0	0	**1**	11	0	20	**31**	**110**			0	0	1	0
7:15	12	34	1	**47**	0	28	12	**40**	1	0	0	**1**	19	0	25	**44**	**132**			0	0	0	2
7:30	15	57	1	**73**	2	42	11	**55**	1	0	1	**2**	28	1	42	**71**	**201**			0	0	0	1
7:45	28	103	0	**131**	0	47	13	**60**	0	0	0	**0**	29	1	30	**60**	**251**	694		0	0	0	4
8:00	12	64	0	**76**	1	53	22	**76**	0	0	2	**2**	22	1	29	**52**	**206**	790		0	0	1	2
8:15	12	82	0	**94**	0	66	21	**87**	0	0	0	**0**	28	0	49	**77**	**258**	916		0	0	1	3
8:30	23	100	0	**123**	1	67	23	**91**	1	0	0	**1**	24	0	55	**79**	**294**	1009		0	0	0	0
8:45	33	130	0	**163**	0	87	40	**127**	0	0	0	**0**	40	0	44	**84**	**374**	1132		0	0	0	1
9:00	11	78	0	**89**	0	73	26	**99**	0	0	0	**0**	31	0	33	**64**	**252**	1178		0	0	3	6
9:15	19	91	0	**110**	1	86	21	**108**	0	1	0	**1**	27	0	27	**54**	**273**	1193		0	0	0	2
9:30	15	81	3	**99**	0	72	31	**103**	1	0	0	**1**	28	1	37	**66**	**269**	1168		0	0	0	3
9:45	21	111	1	**133**	0	93	34	**127**	0	0	0	**0**	27	0	30	**57**	**317**	1111		0	2	1	7
10:00	9	75	0	**84**	1	102	38	**141**	1	0	1	**2**	46	0	26	**72**	**299**	1158		0	0	1	0
10:15	26	94	0	**120**	0	104	25	**129**	0	0	0	**0**	23	1	50	**74**	**323**	1208		0	1	0	1
10:30	19	94	1	**114**	0	75	31	**106**	0	1	0	**1**	32	0	33	**65**	**286**	1225		0	0	1	3
10:45	20	118	0	**138**	0	95	22	**117**	0	0	1	**1**	38	0	41	**79**	**335**	1243		0	0	0	3
11:00	17	104	0	**121**	0	125	34	**159**	1	1	0	**2**	23	2	32	**57**	**339**	1283	*	0	0	4	2
11:15	20	100	0	**120**	2	118	34	**154**	0	0	1	**1**	24	1	36	**61**	**336**	1296	*	0	0	0	3
11:30	24	105	1	**130**	0	96	44	**140**	1	1	1	**3**	35	1	41	**77**	**350**	1360	*	0	0	0	1
11:45	25	125	0	**150**	0	118	28	**146**	1	1	0	**2**	41	1	50	**92**	**390**	1415	+	0	0	0	2
Total	371	1772	8	**2151**	8	1583	516	**2107**	9	5	7	**21**	576	10	730	**1316**	**5595**			0	3	13	46
12:00	24	107	0	**131**	0	107	38	**145**	0	1	1	**2**	42	0	46	**88**	**366**			0	2	1	4
12:15	16	94	0	**110**	1	109	31	**141**	0	1	0	**1**	33	1	39	**73**	**325**			0	0	0	2
12:30	25	103	0	**128**	0	85	42	**127**	0	0	0	**0**	25	0	37	**62**	**317**			0	2	0	5
12:45	34	132	1	**167**	0	116	39	**155**	0	0	1	**1**	45	0	41	**86**	**409**	1417	+	0	0	1	2
13:00	23	124	0	**147**	0	125	38	**163**	0	0	0	**0**	32	1	41	**74**	**384**	1435	*	0	0	0	3
13:15	22	105	0	**127**	0	100	40	**140**	0	0	1	**1**	30	0	34	**64**	**332**	1442	*	0	0	0	1
13:30	18	118	0	**136**	1	100	49	**150**	0	1	0	**1**	32	0	38	**70**	**357**	1482	*	0	0	0	1
13:45	35	123	0	**158**	0	119	36	**155**	0	1	0	**1**	40	1	37	**78**	**392**	1465		0	0	1	2
14:00	19	87	0	**106**	2	117	27	**146**	0	1	2	**3**	31	0	49	**80**	**335**	1416		0	0	1	0
14:15	23	105	0	**128**	1	121	39	**161**	0	1	1	**2**	28	0	46	**74**	**365**	1449		0	0	0	0
14:30	26	117	0	**143**	0	109	45	**154**	0	0	0	**0**	23	0	40	**63**	**360**	1452		0	0	0	0
14:45	31	105	0	**136**	0	113	38	**151**	0	1	0	**1**	32	0	52	**84**	**372**	1432		0	0	0	0
n/a																							
n/a																							
n/a																							
n/a																							
Total	296	1320	1	**1617**	5	1321	462	**1788**	0	7	6	**13**	393	3	500	**896**	**4314**			0	4	4	20
n/a																							
n/a																							
n/a																							
n/a																							
n/a																							
n/a																							
n/a																							
n/a																							
n/a																							
n/a																							
n/a																							
n/a																							
n/a																							
n/a																							
n/a																							
n/a																							
n/a																							
n/a																							
Total																							

AM Peak Period
Regular Vehicles

3rd Avenue @ Redford Street
Wednesday, September 27, 2017

Time Period Begins	Redford St NORTH Approach				Redford St SOUTH Approach				3rd Ave WEST Approach				3rd Ave EAST Approach				Total Volume		Peak	Crosswalks				Conflict	
	Left	Thru	Right	Total	Left	Thru	Right	Total	Left	Thru	Right	Total	Left	Thru	Right	Total	15-min	Hour		N	S	W	E	15 min	Hr
7:00	10	26	0	36	0	36	6	42	1	0	0	1	11	0	20	31	110			0	0	1	0	73	
7:15	12	34	1	47	0	28	12	40	1	0	0	1	19	0	25	44	132			0	0	0	2	78	
7:30	15	57	1	73	2	42	11	55	1	0	1	2	28	1	42	71	201			0	0	0	1	112	
7:45	28	103	0	131	0	47	13	60	0	0	0	0	29	1	30	60	251	694		0	0	0	4	134	397
8:00	12	64	0	76	1	53	22	76	0	0	2	2	22	1	29	52	206	790		0	0	1	2	117	441
8:15	12	82	0	94	0	66	21	87	0	0	0	0	28	0	49	77	258	916		0	0	1	3	148	511
8:30	23	100	0	123	1	67	23	91	1	0	0	1	24	0	55	79	294	1009		0	0	0	0	169	568
8:45	33	130	0	163	0	87	40	127	0	0	0	0	40	0	44	84	374	1132		0	0	0	1	204	638
9:00	11	78	0	89	0	73	26	99	0	0	0	0	31	0	33	64	252	1178		0	0	3	6	143	664
9:15	19	91	0	110	1	86	21	108	0	1	0	1	27	0	27	54	273	1193		0	0	0	2	154	670
9:30	15	81	3	99	0	72	31	103	1	0	0	1	28	1	37	66	269	1168		0	0	0	3	157	658
9:45	21	111	1	133	0	93	34	127	0	0	0	0	27	0	30	57	317	1111		0	2	1	7	178	632
10:00	9	75	0	84	1	102	38	141	1	0	1	2	46	0	26	72	299	1158		0	0	1	0	196	685
10:15	26	94	0	120	0	104	25	129	0	0	0	0	23	1	50	74	323	1208		0	1	0	1	206	737
10:30	19	94	1	114	0	75	31	106	0	1	0	1	32	0	33	65	286	1225		0	0	1	3	158	738
10:45	20	118	0	138	0	95	22	117	0	0	1	1	38	0	41	79	335	1243		0	0	0	3	178	738
11:00	17	104	0	121	0	125	34	159	1	1	0	2	23	2	32	57	339	1283	*	0	0	4	2	211	753
11:15	20	100	0	120	2	118	34	154	0	0	1	1	24	1	36	61	336	1296	*	0	0	0	3	209	756
11:30	24	105	1	130	0	96	44	140	1	1	1	3	35	1	41	77	350	1360	*	0	0	0	1	207	805
11:45	25	125	0	150	0	118	28	146	1	1	0	2	41	1	50	92	390	1415	+	0	0	0	2	223	850
Total	371	1772	8	**2151**	8	1583	516	**2107**	9	5	7	**21**	576	10	730	**1316**	5595			0	3	13	46		3219
Avg Hr	74	354	2	**430**	2	317	103	**421**	2	1	1	**4**	115	2	146	**263**	1119			0	1	3	9		

Peak hour of the intersection

Pk Hr	86	434	1	521	2	457	140	599	3	3	2	8	123	5	159	287	1415	*	0	0	4	8	850
15x4	100	500	4	600	8	500	176	636	4	4	4	12	164	8	200	368	1560	+	0	0	16	12	988
PHF	0.86	0.87	0.25	**0.87**	0.25	0.91	0.80	**0.94**	0.75	0.75	0.50	**0.67**	0.75	0.63	0.80	**0.78**	0.91		n/a	n/a	0.25	0.67	0.86

Peak hour of conflicting volumes for the intersection

Pk Hr	86	434	1	521	2	457	140	599	3	3	2	8	123	5	159	287	1415	*	0	0	4	8	850
15x4	100	500	4	600	8	500	176	636	4	4	4	12	164	8	200	368	1560	+	0	0	16	12	988
PHF	0.86	0.87	0.25	**0.87**	0.25	0.91	0.80	**0.94**	0.75	0.75	0.50	**0.67**	0.75	0.63	0.80	**0.78**	0.91		n/a	n/a	0.25	0.67	0.86

** Calculated peak hour occurs during the first or last hour of shift and therefore may be invalid. **

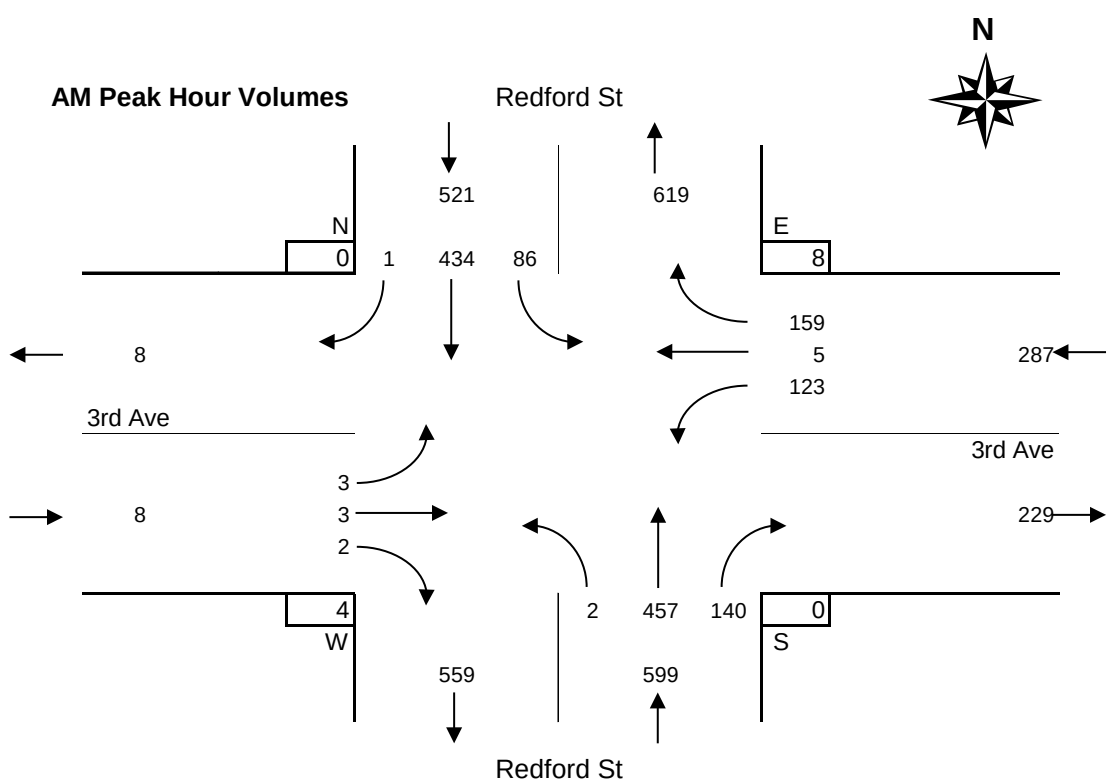

MD Peak Period

Regular Vehicles

3rd Avenue @ Redford Street

Wednesday, September 27, 2017

Time Period Begins	Redford St NORTH Approach				Redford St SOUTH Approach				3rd Ave WEST Approach				3rd Ave EAST Approach				Total Volume		Peak	Crosswalks				Conflict	
	Left	Thru	Right	Total	Left	Thru	Right	Total	Left	Thru	Right	Total	Left	Thru	Right	Total	15-min	Hour		N	S	W	E	15 min	Hr
12:00	24	107	0	131	0	107	38	145	0	1	1	2	42	0	46	88	366			0	2	1	4	215	
12:15	16	94	0	110	1	109	31	141	0	1	0	1	33	1	39	73	325			0	0	0	2	196	
12:30	25	103	0	128	0	85	42	127	0	0	0	0	25	0	37	62	317			0	2	0	5	189	
12:45	34	132	1	167	0	116	39	155	0	0	1	1	45	0	41	86	409	1417	+	0	0	1	2	235	835
13:00	23	124	0	147	0	125	38	163	0	0	0	0	32	1	41	74	384	1435	*	0	0	0	3	228	848
13:15	22	105	0	127	0	100	40	140	0	0	1	1	30	0	34	64	332	1442	*	0	0	0	1	196	848
13:30	18	118	0	136	1	100	49	150	0	1	0	1	32	0	38	70	357	1482	*	0	0	0	1	205	864
13:45	35	123	0	158	0	119	36	155	0	1	0	1	40	1	37	78	392	1465		0	0	1	2	231	860
14:00	19	87	0	106	2	117	27	146	0	1	2	3	31	0	49	80	335	1416		0	0	1	0	212	844
14:15	23	105	0	128	1	121	39	161	0	1	1	2	28	0	46	74	365	1449		0	0	0	0	229	877
14:30	26	117	0	143	0	109	45	154	0	0	0	0	23	0	40	63	360	1452		0	0	0	0	220	892
14:45	31	105	0	136	0	113	38	151	0	1	0	1	32	0	52	84	372	1432		0	0	0	0	234	895
n/a																									
n/a																									
n/a																									
n/a																									
Total	296	1320	1	**1617**	5	1321	462	**1788**	0	7	6	**13**	393	3	500	**896**	4314			0	4	4	20		2582
Avg Hr	99	440	0	**539**	2	440	154	**596**	0	2	2	**4**	131	1	167	**299**	1438			0	1	1	7		

Peak hour of the intersection

Pk Hr	97	479	1	577	1	441	166	608	0	1	2	3	139	1	154	294	1482	*		0	0	1	7		859
15x4	136	528	4	668	4	500	196	652	0	4	4	4	180	4	164	344	1636	+		0	0	4	12		1020
PHF	0.71	0.91	0.25	**0.86**	0.25	0.88	0.85	**0.93**	n/a	0.25	0.50	**0.75**	0.77	0.25	0.94	**0.85**	0.91			n/a	n/a	0.25	0.58		0.84

Peak hour of conflicting volumes for the intersection

Pk Hr	99	414	0	513	3	460	149	612	0	3	3	6	114	0	187	301	1432	*		0	0	1	0		895
15x4	124	468	0	572	8	484	180	644	0	4	8	12	128	0	208	336	1488	+		0	0	4	0		996
PHF	0.80	0.88	n/a	**0.90**	0.38	0.95	0.83	**0.95**	n/a	0.75	0.38	**0.50**	0.89	n/a	0.90	**0.90**	0.96			n/a	n/a	0.25	n/a		0.90

MD Peak Hour Volumes

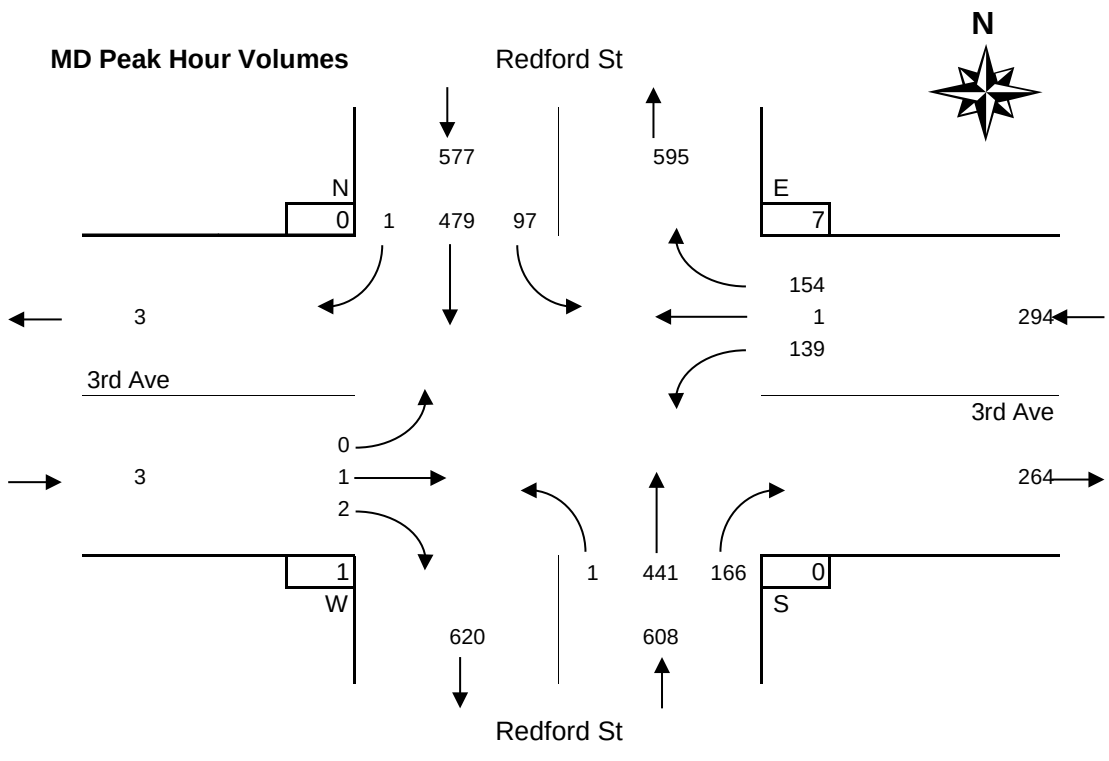

PM Peak Period
Regular Vehicles

3rd Avenue @ Redford Street
Wednesday, September 27, 2017

Time Period Begins	Redford St NORTH Approach				Redford St SOUTH Approach				3rd Ave WEST Approach				3rd Ave EAST Approach				Total Volume		Peak	Crosswalks				Conflict	
	Left	Thru	Right	Total	Left	Thru	Right	Total	Left	Thru	Right	Total	Left	Thru	Right	Total	15-min	Hour		N	S	W	E	15 min	Hr
n/a																									
n/a																									
n/a																									
n/a																									
n/a																									
n/a																									
n/a																									
n/a																									
n/a																									
n/a																									
n/a																									
n/a																									
n/a																									
n/a																									
n/a																									
n/a																									
n/a																									
n/a																									
n/a																									
Total																									0
Avg Hr																									

Peak hour of the intersection

Pk Hr																		*							0
15x4																		+							0
PHF																									n/a

Peak hour of conflicting volumes for the intersection

Pk Hr																		*							0
15x4																		+							0
PHF																									n/a

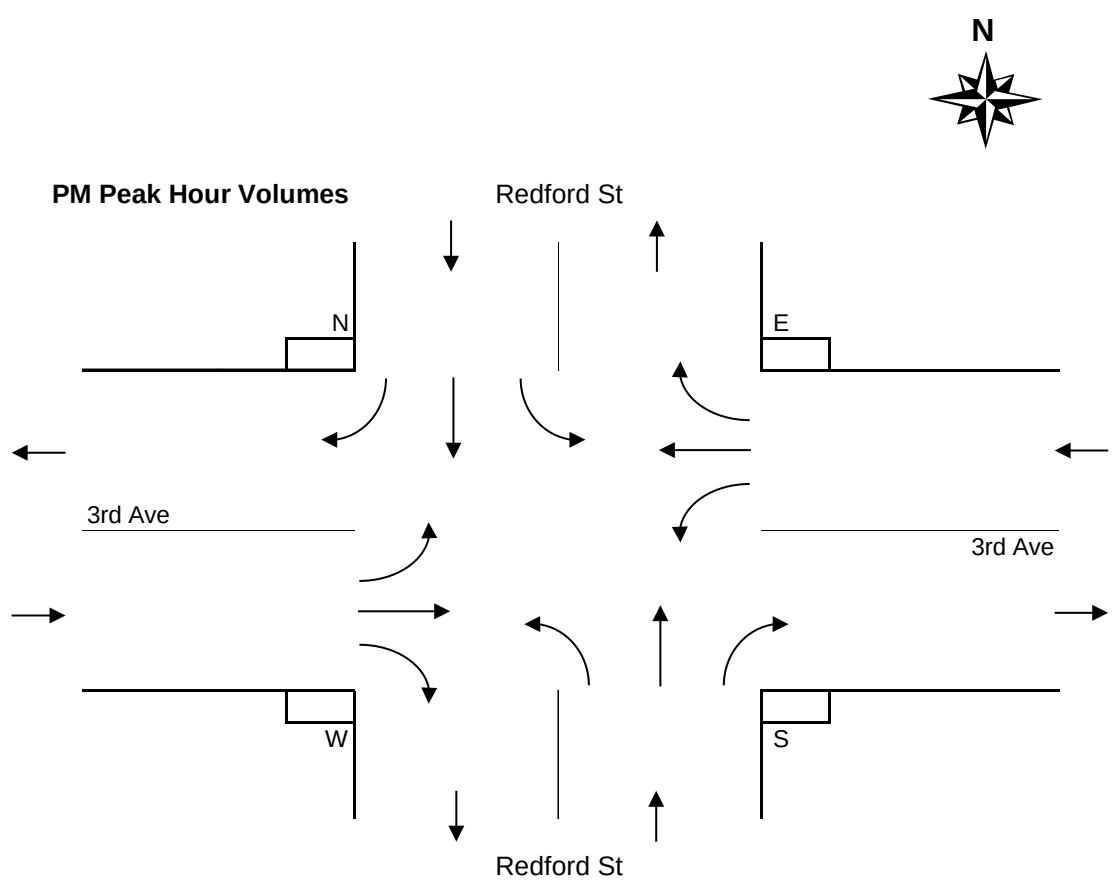

Period Hourly Averages
Regular Vehicles

3rd Avenue @ Redford Street
Wednesday, September 27, 2017

Entire Survey Period
8 Hours

	Redford St				Redford St				3rd Ave				3rd Ave				Total	Crosswalks			
	NORTH Approach				SOUTH Approach				WEST Approach				EAST Approach				Volume				
	Left	Thru	Right	Total	Left	Thru	Right	Total	Left	Thru	Right	Total	Left	Thru	Right	Total		N	S	W	E
Total	667	3092	9	**3768**	13	2904	978	**3895**	9	12	13	**34**	969	13	1230	**2212**	9909	0	7	17	66
Avg Hr	83	387	1	**471**	2	363	122	**487**	1	2	2	**4**	121	2	154	**277**	1239	0	1	2	8

AM Peak Period
5 Hours

	Redford St				Redford St				3rd Ave				3rd Ave				Total	Crosswalks			
	NORTH Approach				SOUTH Approach				WEST Approach				EAST Approach				Volume				
Totals	Left	Thru	Right	Total	Left	Thru	Right	Total	Left	Thru	Right	Total	Left	Thru	Right	Total		N	S	W	E
Period	371	1772	8	**2151**	8	1583	516	**2107**	9	5	7	**21**	576	10	730	**1316**	5595	0	3	13	46
Avg Hr	74	354	2	**430**	2	317	103	**421**	2	1	1	**4**	115	2	146	**263**	1119	0	1	3	9

MD Peak Period
3 Hours

	Redford St				Redford St				3rd Ave				3rd Ave				Total	Crosswalks			
	NORTH Approach				SOUTH Approach				WEST Approach				EAST Approach				Volume				
Totals	Left	Thru	Right	Total	Left	Thru	Right	Total	Left	Thru	Right	Total	Left	Thru	Right	Total		N	S	W	E
Total	296	1320	1	**1617**	5	1321	462	**1788**	0	7	6	**13**	393	3	500	**896**	4314	0	4	4	20
Avg Hr	99	440	0	**539**	2	440	154	**596**	0	2	2	**4**	131	1	167	**299**	1438	0	1	1	7

PM Peak Period
Hours

	Redford St				Redford St				3rd Ave				3rd Ave				Total	Crosswalks			
	NORTH Approach				SOUTH Approach				WEST Approach				EAST Approach				Volume				
Totals	Left	Thru	Right	Total	Left	Thru	Right	Total	Left	Thru	Right	Total	Left	Thru	Right	Total		N	S	W	E
Total																					
Avg Hr																					

Average Hour Volumes

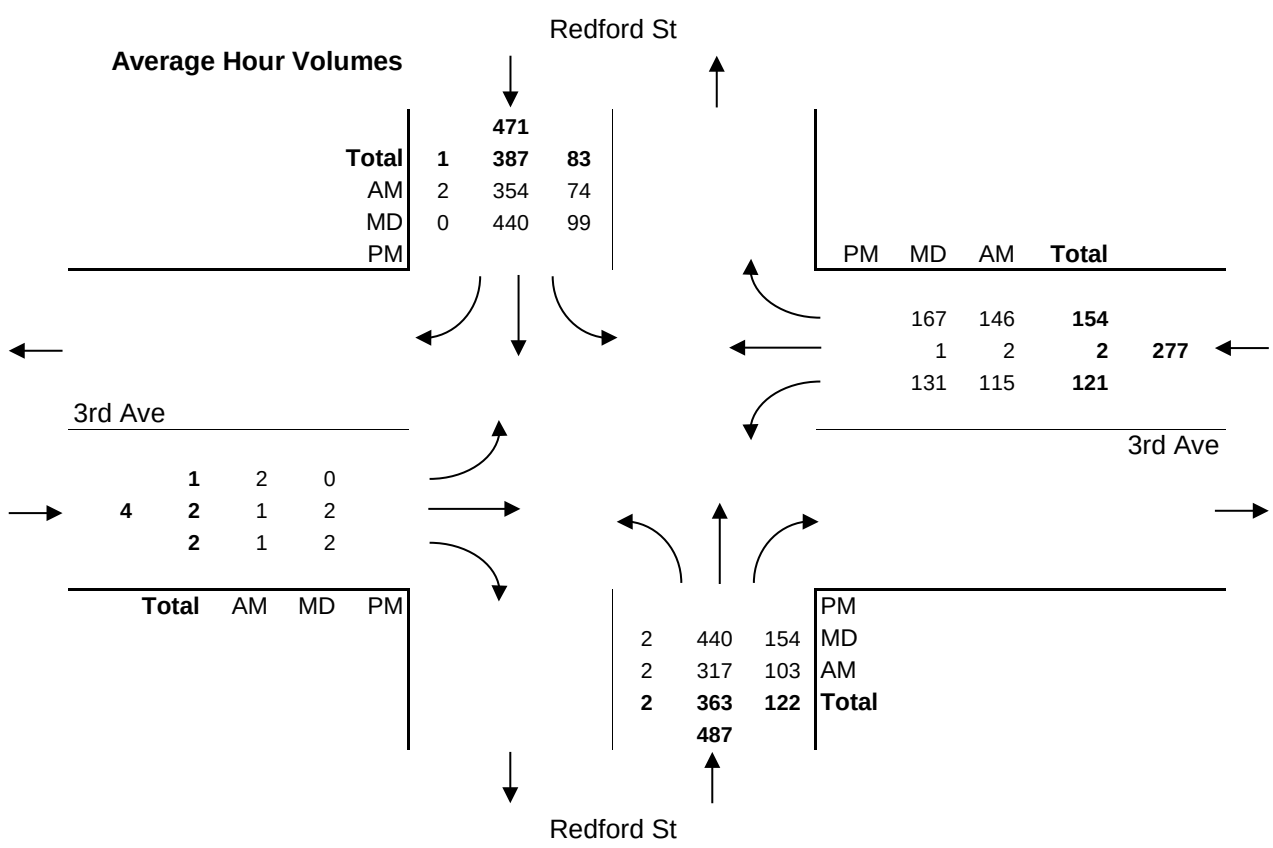

Vehicle Turning Movement Survey
With Classification

Major Route: 3rd Avenue
Minor Route: Redford Street
Municipality: Port Alberni
Filename: 1-3rd Ave @ Redford St-Sep 27, 2017.xlsx
Location #: 1

Date: September 27, 2017
Day-of-week: Wednesday

East/West Route: 3rd Avenue
Intersection Type: 4-leg
Signalized?: Yes
Weather: Clear and dry

Vehicle Classifications: Regular Vehicles
Buses
Articulated Trucks
Cube Trucks
Dump Trucks
Emergency Trucks
Garbage Trucks
Logging Trucks
RVs
Utility Trucks

This data is for Buses

Shift	Start	End	Duration
AM	7:00	12:00	5.00
MD	12:00	15:00	3.00
PM			
Total	**7:00**		**8.00**

Notes: 24-hour clock used for reporting (15-minute increments)
North Approach - southbound vehicles approaching intersection from the north
15x4 - 15 min volume (from maximum 15 minute period of movement/approach in peak hour period [*]) x 4
Pedestrians - N indicates pedestrians crossing north approach (east/west)

Comments:

Survey Data
Buses

3rd Avenue @ Redford Street
Wednesday, September 27, 2017

Time Period Begins	Redford St NORTH Approach				Redford St SOUTH Approach				3rd Ave WEST Approach				3rd Ave EAST Approach				Total Volume		Peak				
	Left	Thru	Right	Total	Left	Thru	Right	Total	Left	Thru	Right	Total	Left	Thru	Right	Total	15-min	Hour		N	S	W	E
7:00	0	0	0	**0**	0	0	0	**0**	0	0	0	**0**	0	0	1	**1**	**1**			0	0	0	0
7:15	0	0	0	**0**	0	0	0	**0**	0	0	0	**0**	0	0	0	**0**	**0**			0	0	0	0
7:30	0	0	0	**0**	0	0	1	**1**	0	0	0	**0**	0	0	0	**0**	**1**			0	0	0	0
7:45	0	0	0	**0**	0	1	0	**1**	0	0	0	**0**	0	0	1	**1**	**2**	4		0	0	0	0
8:00	1	0	0	**1**	0	0	1	**1**	0	0	0	**0**	0	0	0	**0**	**2**	5		0	0	0	0
8:15	0	0	0	**0**	0	2	0	**2**	0	0	0	**0**	0	0	0	**0**	**2**	7		0	0	0	0
8:30	0	1	0	**1**	0	0	0	**0**	0	0	0	**0**	0	0	0	**0**	**1**	7		0	0	0	0
8:45	0	1	0	**1**	0	0	1	**1**	0	0	0	**0**	0	0	0	**0**	**2**	7		0	0	0	0
9:00	0	0	0	**0**	0	0	0	**0**	0	0	0	**0**	0	0	0	**0**	**0**	5		0	0	0	0
9:15	0	0	0	**0**	0	0	0	**0**	0	0	0	**0**	0	0	0	**0**	**0**	3		0	0	0	0
9:30	0	0	0	**0**	0	0	1	**1**	0	0	0	**0**	0	0	0	**0**	**1**	3		0	0	0	0
9:45	0	0	0	**0**	0	0	0	**0**	0	0	0	**0**	0	0	1	**1**	**1**	2		0	0	0	0
10:00	1	0	0	**1**	0	0	0	**0**	0	0	0	**0**	1	0	0	**1**	**2**	4		0	0	0	0
10:15	1	0	0	**1**	0	0	2	**2**	0	0	0	**0**	0	0	0	**0**	**3**	7		0	0	0	0
10:30	1	0	0	**1**	0	0	0	**0**	0	0	0	**0**	0	0	0	**0**	**1**	7		0	0	0	0
10:45	1	0	0	**1**	0	0	0	**0**	0	0	0	**0**	0	0	0	**0**	**1**	7		0	0	0	0
11:00	0	0	0	**0**	0	0	1	**1**	0	0	0	**0**	0	0	0	**0**	**1**	6	*	0	0	0	0
11:15	0	0	0	**0**	0	0	0	**0**	0	0	0	**0**	0	0	0	**0**	**0**	3	*	0	0	0	0
11:30	0	0	0	**0**	0	0	0	**0**	0	0	0	**0**	0	0	0	**0**	**0**	2	*	0	0	0	0
11:45	0	0	0	**0**	0	0	0	**0**	0	0	0	**0**	0	0	0	**0**	**0**	1	+	0	0	0	0
Total	5	2	0	**7**	0	3	7	**10**	0	0	0	**0**	1	0	3	**4**	**21**			0	0	0	0
12:00	0	1	0	**1**	0	0	0	**0**	0	0	0	**0**	0	0	1	**1**	**2**			0	0	0	0
12:15	0	0	0	**0**	0	0	1	**1**	0	0	0	**0**	0	0	0	**0**	**1**			0	0	0	0
12:30	0	1	0	**1**	0	0	0	**0**	0	0	0	**0**	0	0	0	**0**	**1**			0	0	0	0
12:45	0	0	0	**0**	0	0	0	**0**	0	0	0	**0**	0	0	0	**0**	**0**	4	+	0	0	0	0
13:00	0	0	0	**0**	0	2	1	**3**	0	0	0	**0**	0	0	0	**0**	**3**	5	*	0	0	0	0
13:15	0	0	0	**0**	0	0	0	**0**	0	0	0	**0**	0	0	0	**0**	**0**	4	*	0	0	0	0
13:30	0	0	0	**0**	0	0	1	**1**	0	0	0	**0**	0	0	1	**1**	**2**	5	*	0	0	0	0
13:45	0	0	0	**0**	0	0	0	**0**	0	0	0	**0**	0	0	0	**0**	**0**	5		0	0	0	0
14:00	0	1	0	**1**	0	0	0	**0**	0	0	0	**0**	0	0	0	**0**	**1**	3		0	0	0	0
14:15	0	0	0	**0**	0	0	1	**1**	0	0	0	**0**	0	0	1	**1**	**2**	5		0	0	0	0
14:30	0	1	0	**1**	0	0	0	**0**	0	0	0	**0**	0	0	0	**0**	**1**	4		0	0	0	0
14:45	0	1	0	**1**	0	0	0	**0**	0	0	0	**0**	0	0	0	**0**	**1**	5		0	0	0	0
n/a																							
n/a																							
n/a																							
n/a																							
Total	0	5	0	**5**	0	2	4	**6**	0	0	0	**0**	0	0	3	**3**	**14**			0	0	0	0
n/a																							
n/a																							
n/a																							
n/a																							
n/a																							
n/a																							
n/a																							
n/a																							
n/a																							
n/a																							
n/a																							
n/a																							
n/a																							
n/a																							
n/a																							
n/a																							
n/a																							
n/a																							
Total																							

AM Peak Period
Buses

3rd Avenue @ Redford Street
Wednesday, September 27, 2017

Time Period Begins	Redford St NORTH Approach				Redford St SOUTH Approach				3rd Ave WEST Approach				3rd Ave EAST Approach				Total Volume		Peak					Conflict	
	Left	Thru	Right	Total	Left	Thru	Right	Total	Left	Thru	Right	Total	Left	Thru	Right	Total	15-min	Hour		N	S	W	E	15 min	Hr
7:00	0	0	0	0	0	0	0	0	0	0	0	0	0	0	1	1	1			0	0	0	0	1	
7:15	0	0	0	0	0	0	0	0	0	0	0	0	0	0	0	0	0			0	0	0	0	0	
7:30	0	0	0	0	0	0	1	1	0	0	0	0	0	0	0	0	1			0	0	0	0	1	
7:45	0	0	0	0	0	1	0	1	0	0	0	0	0	0	1	1	2	4		0	0	0	0	2	4
8:00	1	0	0	1	0	0	1	1	0	0	0	0	0	0	0	0	2	5		0	0	0	0	2	5
8:15	0	0	0	0	0	2	0	2	0	0	0	0	0	0	0	0	2	7		0	0	0	0	2	7
8:30	0	1	0	1	0	0	0	0	0	0	0	0	0	0	0	0	1	7		0	0	0	0	1	7
8:45	0	1	0	1	0	0	1	1	0	0	0	0	0	0	0	0	2	7		0	0	0	0	1	6
9:00	0	0	0	0	0	0	0	0	0	0	0	0	0	0	0	0	0	5		0	0	0	0	0	4
9:15	0	0	0	0	0	0	0	0	0	0	0	0	0	0	0	0	0	3		0	0	0	0	0	2
9:30	0	0	0	0	0	0	1	1	0	0	0	0	0	0	0	0	1	3		0	0	0	0	1	2
9:45	0	0	0	0	0	0	0	0	0	0	0	0	0	0	1	1	1	2		0	0	0	0	1	2
10:00	1	0	0	1	0	0	0	0	0	0	0	0	1	0	0	1	2	4		0	0	0	0	2	4
10:15	1	0	0	1	0	0	2	2	0	0	0	0	0	0	0	0	3	7		0	0	0	0	3	7
10:30	1	0	0	1	0	0	0	0	0	0	0	0	0	0	0	0	1	7		0	0	0	0	1	7
10:45	1	0	0	1	0	0	0	0	0	0	0	0	0	0	0	0	1	7		0	0	0	0	1	7
11:00	0	0	0	0	0	0	1	1	0	0	0	0	0	0	0	0	1	6	*	0	0	0	0	1	6
11:15	0	0	0	0	0	0	0	0	0	0	0	0	0	0	0	0	0	3	*	0	0	0	0	0	3
11:30	0	0	0	0	0	0	0	0	0	0	0	0	0	0	0	0	0	2	*	0	0	0	0	0	2
11:45	0	0	0	0	0	0	0	0	0	0	0	0	0	0	0	0	0	1	+	0	0	0	0	0	1
Total	5	2	0	**7**	0	3	7	**10**	0	0	0	**0**	1	0	3	**4**	21			0	0	0	0		18
Avg Hr	1	0	0	**1**	0	1	1	**2**	0	0	0	**0**	0	0	1	**1**	4			0	0	0	0		

Peak hour of the intersection

Pk Hr	0	0	0	0	0	0	1	1	0	0	0	0	0	0	0	0	1	*		0	0	0	0		1
15x4	0	0	0	0	0	0	4	4	0	0	0	0	0	0	0	0	4	+		0	0	0	0		4
PHF	n/a	n/a	n/a	**n/a**	n/a	n/a	0.25	**0.25**	n/a	n/a	n/a	**n/a**	n/a	n/a	n/a	**n/a**	0.25			n/a	n/a	n/a	n/a		0.25

Peak hour of conflicting volumes for the intersection

Pk Hr	0	0	0	0	0	0	1	1	0	0	0	0	0	0	0	0	1	*		0	0	0	0		1
15x4	0	0	0	0	0	0	4	4	0	0	0	0	0	0	0	0	4	+		0	0	0	0		4
PHF	n/a	n/a	n/a	**n/a**	n/a	n/a	0.25	**0.25**	n/a	n/a	n/a	**n/a**	n/a	n/a	n/a	**n/a**	0.25			n/a	n/a	n/a	n/a		0.25

** Calculated peak hour occurs during the first or last hour of shift and therefore may be invalid. **

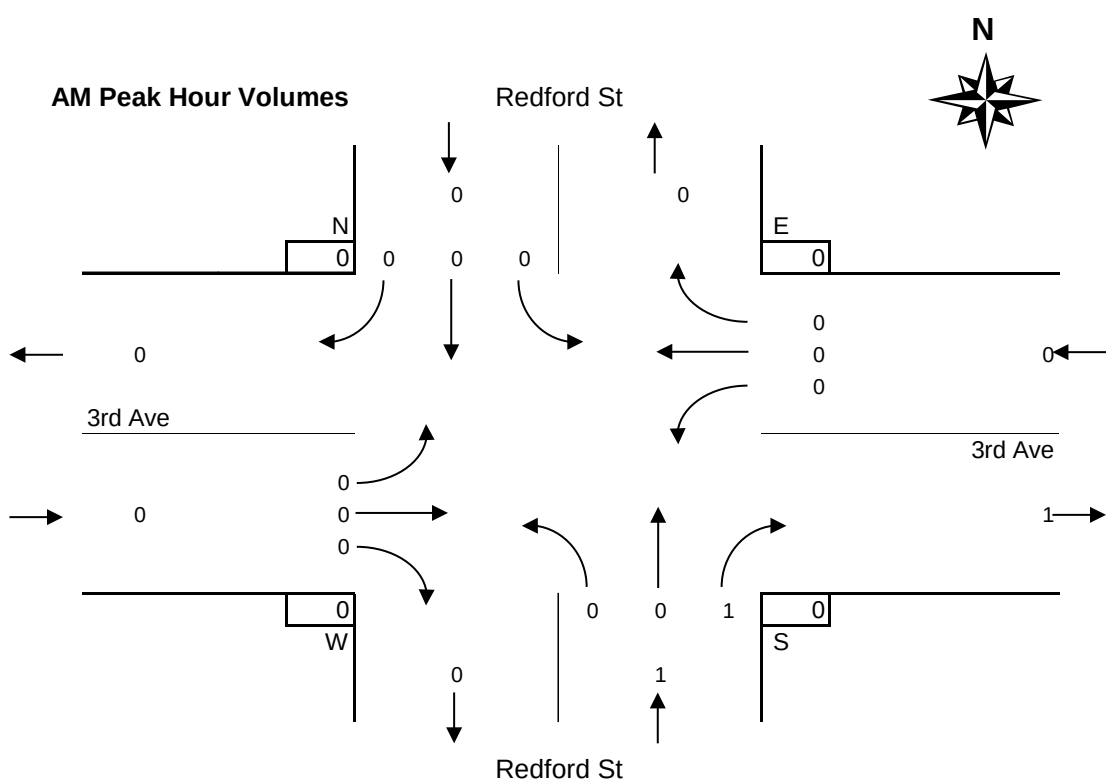

MD Peak Period
Buses

3rd Avenue @ Redford Street
Wednesday, September 27, 2017

Time Period Begins	Redford St NORTH Approach				Redford St SOUTH Approach				3rd Ave WEST Approach				3rd Ave EAST Approach				Total Volume		Peak					Conflict	
	Left	Thru	Right	Total	Left	Thru	Right	Total	Left	Thru	Right	Total	Left	Thru	Right	Total	15-min	Hour		N	S	W	E	15 min	Hr
12:00	0	1	0	1	0	0	0	0	0	0	0	0	0	0	1	1	2			0	0	0	0	2	
12:15	0	0	0	0	0	0	1	1	0	0	0	0	0	0	0	0	1			0	0	0	0	1	
12:30	0	1	0	1	0	0	0	0	0	0	0	0	0	0	0	0	1			0	0	0	0	1	
12:45	0	0	0	0	0	0	0	0	0	0	0	0	0	0	0	0	0	4	+	0	0	0	0	0	4
13:00	0	0	0	0	0	2	1	3	0	0	0	0	0	0	0	0	3	5	*	0	0	0	0	3	5
13:15	0	0	0	0	0	0	0	0	0	0	0	0	0	0	0	0	0	4	*	0	0	0	0	0	4
13:30	0	0	0	0	0	0	1	1	0	0	0	0	0	0	1	1	2	5	*	0	0	0	0	2	5
13:45	0	0	0	0	0	0	0	0	0	0	0	0	0	0	0	0	0	5		0	0	0	0	0	5
14:00	0	1	0	1	0	0	0	0	0	0	0	0	0	0	0	0	1	3		0	0	0	0	1	3
14:15	0	0	0	0	0	0	1	1	0	0	0	0	0	0	1	1	2	5		0	0	0	0	2	5
14:30	0	1	0	1	0	0	0	0	0	0	0	0	0	0	0	0	1	4		0	0	0	0	1	4
14:45	0	1	0	1	0	0	0	0	0	0	0	0	0	0	0	0	1	5		0	0	0	0	1	5
n/a																									
n/a																									
n/a																									
n/a																									
Total	0	5	0	**5**	0	2	4	**6**	0	0	0	**0**	0	0	3	**3**	14			0	0	0	0		9
Avg Hr	0	2	0	**2**	0	1	1	**2**	0	0	0	**0**	0	0	1	**1**	5			0	0	0	0		

Peak hour of the intersection

Pk Hr	0	0	0	0	0	2	2	4	0	0	0	0	0	0	1	1	5	*		0	0	0	0		5
15x4	0	0	0	0	0	8	4	12	0	0	0	0	0	0	4	4	12	+		0	0	0	0		16
PHF	n/a	n/a	n/a	**n/a**	n/a	0.25	0.50	**0.33**	n/a	n/a	n/a	**n/a**	n/a	n/a	0.25	**0.25**	0.42			n/a	n/a	n/a	n/a		0.31

Peak hour of conflicting volumes for the intersection

Pk Hr	0	3	0	3	0	0	1	1	0	0	0	0	0	0	1	1	5	*		0	0	0	0		4
15x4	0	4	0	4	0	0	4	4	0	0	0	0	0	0	4	4	8	+		0	0	0	0		8
PHF	n/a	0.75	n/a	**0.75**	n/a	n/a	0.25	**0.25**	n/a	n/a	n/a	**n/a**	n/a	n/a	0.25	**0.25**	0.63			n/a	n/a	n/a	n/a		0.50

MD Peak Hour Volumes

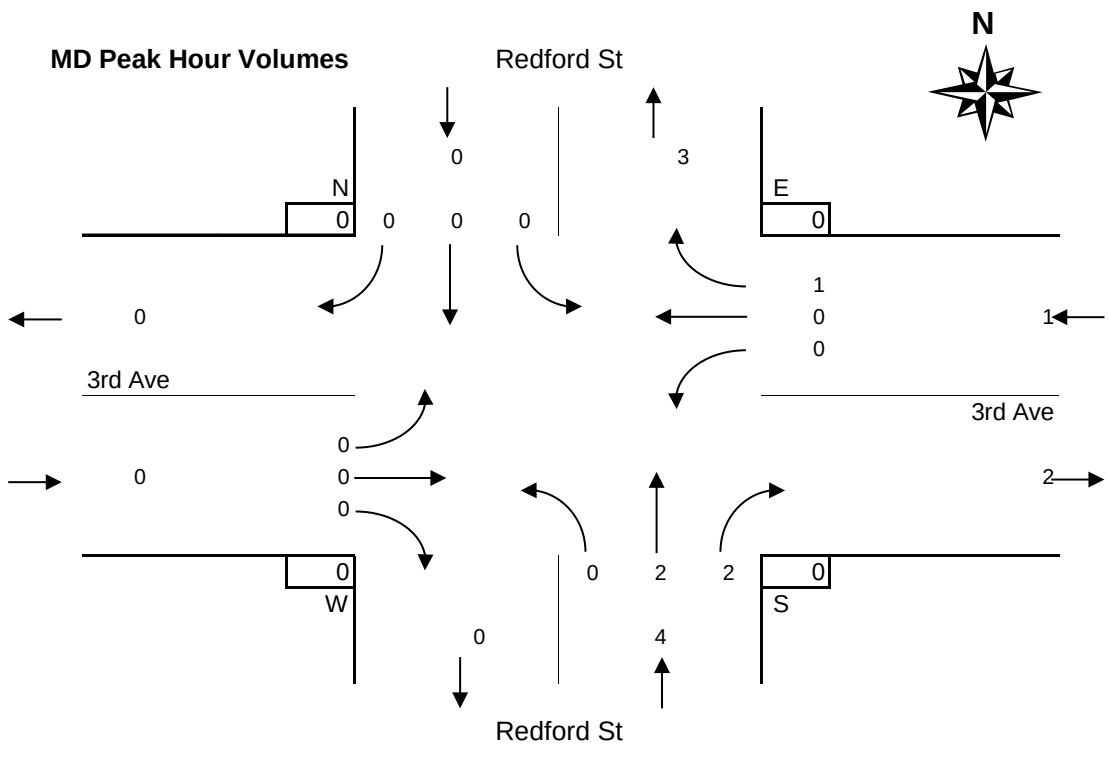

PM Peak Period
Buses

3rd Avenue @ Redford Street
Wednesday, September 27, 2017

Time Period Begins	Redford St NORTH Approach				Redford St SOUTH Approach				3rd Ave WEST Approach				3rd Ave EAST Approach				Total Volume		Peak					Conflict	
	Left	Thru	Right	Total	Left	Thru	Right	Total	Left	Thru	Right	Total	Left	Thru	Right	Total	15-min	Hour		N	S	W	E	15 min	Hr
n/a																									
n/a																									
n/a																									
n/a																									
n/a																									
n/a																									
n/a																									
n/a																									
n/a																									
n/a																									
n/a																									
n/a																									
n/a																									
n/a																									
n/a																									
n/a																									
n/a																									
n/a																									
n/a																									
Total																									0
Avg Hr																									

Peak hour of the intersection

Pk Hr																		*							0
15x4																		+							0
PHF																									n/a

Peak hour of conflicting volumes for the intersection

Pk Hr																		*							0
15x4																		+							0
PHF																									n/a

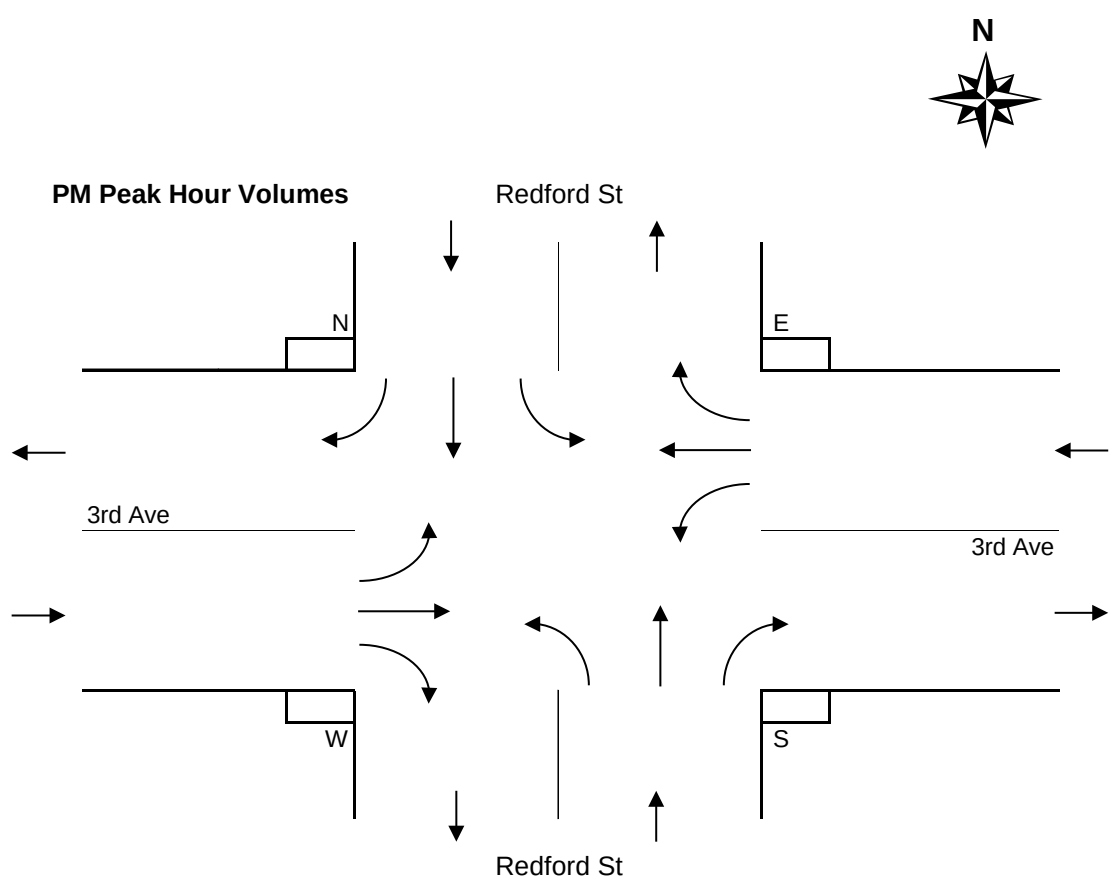

Period Hourly Averages
Buses

3rd Avenue @ Redford Street
Wednesday, September 27, 2017

Entire Survey Period
8 Hours

	Redford St				Redford St				3rd Ave				3rd Ave							
	NORTH Approach				SOUTH Approach				WEST Approach				EAST Approach				Total			
	Left	Thru	Right	Total	Left	Thru	Right	Total	Left	Thru	Right	Total	Left	Thru	Right	Total	Volume	N	S	W	E
Total	5	7	0	**12**	0	5	11	**16**	0	0	0	**0**	1	0	6	**7**	35	0	0	0	0
Avg Hr	1	1	0	**2**	0	1	1	**2**	0	0	0	**0**	0	0	1	**1**	4	0	0	0	0

AM Peak Period
5 Hours

	Redford St				Redford St				3rd Ave				3rd Ave							
	NORTH Approach				SOUTH Approach				WEST Approach				EAST Approach				Total			
Totals	Left	Thru	Right	Total	Left	Thru	Right	Total	Left	Thru	Right	Total	Left	Thru	Right	Total	Volume	N	S	W	E
Period	5	2	0	**7**	0	3	7	**10**	0	0	0	**0**	1	0	3	**4**	21	0	0	0	0
Avg Hr	1	0	0	**1**	0	1	1	**2**	0	0	0	**0**	0	0	1	**1**	4	0	0	0	0

MD Peak Period
3 Hours

	Redford St				Redford St				3rd Ave				3rd Ave							
	NORTH Approach				SOUTH Approach				WEST Approach				EAST Approach				Total			
Totals	Left	Thru	Right	Total	Left	Thru	Right	Total	Left	Thru	Right	Total	Left	Thru	Right	Total	Volume	N	S	W	E
Total	0	5	0	**5**	0	2	4	**6**	0	0	0	**0**	0	0	3	**3**	14	0	0	0	0
Avg Hr	0	2	0	**2**	0	1	1	**2**	0	0	0	**0**	0	0	1	**1**	5	0	0	0	0

PM Peak Period
Hours

	Redford St				Redford St				3rd Ave				3rd Ave							
	NORTH Approach				SOUTH Approach				WEST Approach				EAST Approach				Total			
Totals	Left	Thru	Right	Total	Left	Thru	Right	Total	Left	Thru	Right	Total	Left	Thru	Right	Total	Volume	N	S	W	E
Total																				
Avg Hr																				

Average Hour Volumes

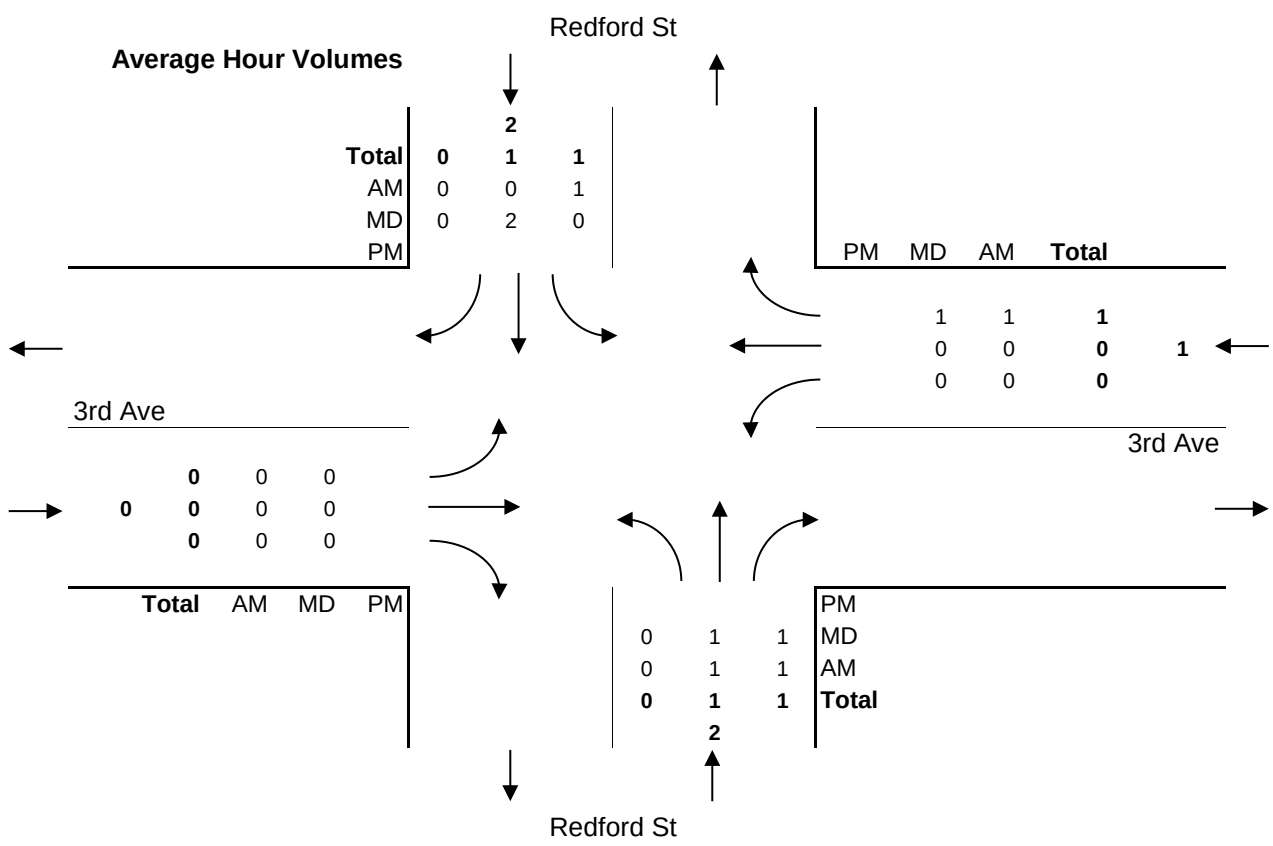

Vehicle Turning Movement Survey
With Classification

Major Route: 3rd Avenue
Minor Route: Redford Street
Municipality: Port Alberni
Filename: 1-3rd Ave @ Redford St-Sep 27, 2017.xlsx
Location #: 1

Date: September 27, 2017
Day-of-week: Wednesday

East/West Route: 3rd Avenue
Intersection Type: 4-leg
Signalized?: Yes
Weather: Clear and dry

Vehicle Classifications: Regular Vehicles
Buses
Articulated Trucks
Cube Trucks
Dump Trucks
Emergency Trucks
Garbage Trucks
Logging Trucks
RVs
Utility Trucks

This data is for Articulated Trucks

Shift	Start	End	Duration
AM	7:00	12:00	5.00
MD	12:00	15:00	3.00
PM			
Total	**7:00**		**8.00**

Notes: 24-hour clock used for reporting (15-minute increments)
North Approach - southbound vehicles approaching intersection from the north
15x4 - 15 min volume (from maximum 15 minute period of movement/approach in peak hour period [*]) x 4
Pedestrians - N indicates pedestrians crossing north approach (east/west)

Comments:

Survey Data
Articulated Trucks

3rd Avenue @ Redford Street
Wednesday, September 27, 2017

Time Period Begins	Redford St NORTH Approach				Redford St SOUTH Approach				3rd Ave WEST Approach				3rd Ave EAST Approach				Total Volume		Peak				
	Left	Thru	Right	Total	Left	Thru	Right	Total	Left	Thru	Right	Total	Left	Thru	Right	Total	15-min	Hour		N	S	W	E
7:00	0	1	0	**1**	0	1	1	**2**	0	1	0	**1**	3	0	0	**3**	**7**			0	0	0	0
7:15	0	0	0	**0**	0	1	1	**2**	0	0	0	**0**	3	1	0	**4**	**6**			0	0	0	0
7:30	0	0	0	**0**	0	0	0	**0**	0	1	0	**1**	0	0	0	**0**	**1**			0	0	0	0
7:45	0	0	0	**0**	0	0	7	**7**	0	0	0	**0**	3	2	0	**5**	**12**	26		0	0	0	0
8:00	1	1	0	**2**	0	0	1	**1**	0	1	0	**1**	2	0	0	**2**	**6**	25		0	0	0	0
8:15	0	0	0	**0**	0	1	1	**2**	0	1	0	**1**	2	1	0	**3**	**6**	25		0	0	0	0
8:30	0	0	0	**0**	0	2	1	**3**	0	0	0	**0**	0	1	0	**1**	**4**	28		0	0	0	0
8:45	0	0	0	**0**	0	0	1	**1**	0	1	0	**1**	0	2	1	**3**	**5**	21		0	0	0	0
9:00	0	0	0	**0**	0	0	3	**3**	0	2	0	**2**	2	0	0	**2**	**7**	22		0	0	0	0
9:15	0	2	0	**2**	0	0	0	**0**	0	0	0	**0**	2	0	0	**2**	**4**	20		0	0	0	0
9:30	1	0	0	**1**	0	0	2	**2**	0	0	0	**0**	2	1	0	**3**	**6**	22		0	0	0	0
9:45	1	0	0	**1**	0	3	0	**3**	0	4	0	**4**	0	1	0	**1**	**9**	26		0	0	0	0
10:00	0	0	0	**0**	0	0	2	**2**	0	0	0	**0**	2	1	0	**3**	**5**	24		0	0	0	0
10:15	0	0	0	**0**	0	1	0	**1**	0	1	1	**2**	0	1	0	**1**	**4**	24		0	0	0	0
10:30	0	2	0	**2**	0	0	1	**1**	0	0	0	**0**	4	2	0	**6**	**9**	27		0	0	0	0
10:45	0	0	0	**0**	0	0	0	**0**	0	0	0	**0**	0	2	0	**2**	**2**	20		0	0	0	0
11:00	0	0	0	**0**	0	1	3	**4**	0	2	0	**2**	0	1	0	**1**	**7**	22	*	0	0	0	0
11:15	0	1	0	**1**	0	0	1	**1**	0	2	0	**2**	2	0	0	**2**	**6**	24	*	0	0	0	0
11:30	0	1	0	**1**	0	1	0	**1**	0	2	0	**2**	1	2	0	**3**	**7**	22	*	0	0	0	0
11:45	0	2	0	**2**	0	0	2	**2**	0	0	0	**0**	1	0	0	**1**	**5**	25	+	0	0	0	0
Total	3	10	0	**13**	0	11	27	**38**	0	18	1	**19**	29	18	1	**48**	**118**			0	0	0	0
12:00	0	0	0	**0**	0	0	0	**0**	0	2	1	**3**	2	0	0	**2**	**5**			0	0	0	0
12:15	0	2	0	**2**	0	1	1	**2**	0	0	1	**1**	5	2	0	**7**	**12**			0	0	0	0
12:30	0	0	0	**0**	0	2	1	**3**	0	0	1	**1**	1	0	0	**1**	**5**			0	0	0	0
12:45	0	0	0	**0**	0	1	2	**3**	0	1	0	**1**	1	1	0	**2**	**6**	28	+	0	0	0	0
13:00	0	2	0	**2**	0	0	1	**1**	0	1	0	**1**	2	2	0	**4**	**8**	31	*	0	0	0	0
13:15	0	0	0	**0**	0	1	3	**4**	0	1	0	**1**	0	0	0	**0**	**5**	24	*	0	0	0	0
13:30	0	1	0	**1**	0	0	1	**1**	0	2	0	**2**	2	0	0	**2**	**6**	25	*	0	0	0	0
13:45	0	0	0	**0**	0	0	1	**1**	0	0	0	**0**	2	2	1	**5**	**6**	25		0	0	0	0
14:00	0	1	0	**1**	0	1	0	**1**	0	1	0	**1**	4	0	0	**4**	**7**	24		0	0	0	0
14:15	0	0	0	**0**	0	0	1	**1**	0	1	0	**1**	2	3	0	**5**	**7**	26		0	0	0	0
14:30	0	2	0	**2**	0	1	2	**3**	0	3	0	**3**	1	1	0	**2**	**10**	30		0	0	0	0
14:45	1	1	0	**2**	0	0	2	**2**	0	1	0	**1**	0	1	0	**1**	**6**	30		0	0	0	0
n/a																							
n/a																							
n/a																							
n/a																							
Total	1	9	0	**10**	0	7	15	**22**	0	13	3	**16**	22	12	1	**35**	**83**			0	0	0	0
n/a																							
n/a																							
n/a																							
n/a																							
n/a																							
n/a																							
n/a																							
n/a																							
n/a																							
n/a																							
n/a																							
n/a																							
n/a																							
n/a																							
n/a																							
n/a																							
n/a																							
n/a																							
Total																							

AM Peak Period
Articulated Trucks

3rd Avenue @ Redford Street
Wednesday, September 27, 2017

Time Period Begins	Redford St NORTH Approach				Redford St SOUTH Approach				3rd Ave WEST Approach				3rd Ave EAST Approach				Total Volume		Peak					Conflict	
	Left	Thru	Right	Total	Left	Thru	Right	Total	Left	Thru	Right	Total	Left	Thru	Right	Total	15-min	Hour		N	S	W	E	15 min	Hr
7:00	0	1	0	1	0	1	1	2	0	1	0	1	3	0	0	3	7			0	0	0	0	6	
7:15	0	0	0	0	0	1	1	2	0	0	0	0	3	1	0	4	6			0	0	0	0	5	
7:30	0	0	0	0	0	0	0	0	0	1	0	1	0	0	0	0	1			0	0	0	0	1	
7:45	0	0	0	0	0	0	7	7	0	0	0	0	3	2	0	5	12	26		0	0	0	0	10	22
8:00	1	1	0	2	0	0	1	1	0	1	0	1	2	0	0	2	6	25		0	0	0	0	5	21
8:15	0	0	0	0	0	1	1	2	0	1	0	1	2	1	0	3	6	25		0	0	0	0	5	21
8:30	0	0	0	0	0	2	1	3	0	0	0	0	0	1	0	1	4	28		0	0	0	0	4	24
8:45	0	0	0	0	0	0	1	1	0	1	0	1	0	2	1	3	5	21		0	0	0	0	4	18
9:00	0	0	0	0	0	0	3	3	0	2	0	2	2	0	0	2	7	22		0	0	0	0	7	20
9:15	0	2	0	2	0	0	0	0	0	0	0	0	2	0	0	2	4	20		0	0	0	0	4	19
9:30	1	0	0	1	0	0	2	2	0	0	0	0	2	1	0	3	6	22		0	0	0	0	5	20
9:45	1	0	0	1	0	3	0	3	0	4	0	4	0	1	0	1	9	26		0	0	0	0	8	24
10:00	0	0	0	0	0	0	2	2	0	0	0	0	2	1	0	3	5	24		0	0	0	0	4	21
10:15	0	0	0	0	0	1	0	1	0	1	1	2	0	1	0	1	4	24		0	0	0	0	3	20
10:30	0	2	0	2	0	0	1	1	0	0	0	0	4	2	0	6	9	27		0	0	0	0	6	21
10:45	0	0	0	0	0	0	0	0	0	0	0	0	0	2	0	2	2	20		0	0	0	0	2	15
11:00	0	0	0	0	0	1	3	4	0	2	0	2	0	1	0	1	7	22	*	0	0	0	0	6	17
11:15	0	1	0	1	0	0	1	1	0	2	0	2	2	0	0	2	6	24	*	0	0	0	0	5	19
11:30	0	1	0	1	0	1	0	1	0	2	0	2	1	2	0	3	7	22	*	0	0	0	0	4	17
11:45	0	2	0	2	0	0	2	2	0	0	0	0	1	0	0	1	5	25	+	0	0	0	0	3	18
Total	3	10	0	**13**	0	11	27	**38**	0	18	1	**19**	29	18	1	**48**	118			0	0	0	0		89
Avg Hr	1	2	0	**3**	0	2	5	**8**	0	4	0	**4**	6	4	0	**10**	24			0	0	0	0		

Peak hour of the intersection

Pk Hr	0	4	0	4	0	2	6	8	0	6	0	6	4	3	0	7	25	*		0	0	0	0		18
15x4	0	8	0	8	0	4	12	16	0	8	0	8	8	8	0	12	28	+		0	0	0	0		32
PHF	n/a	0.50	n/a	**0.50**	n/a	0.50	0.50	**0.50**	n/a	0.75	n/a	**0.75**	0.50	0.38	n/a	**0.58**	0.89			n/a	n/a	n/a	n/a		0.56

Peak hour of conflicting volumes for the intersection

Pk Hr	0	4	0	4	0	2	6	8	0	6	0	6	4	3	0	7	25	*		0	0	0	0		18
15x4	0	8	0	8	0	4	12	16	0	8	0	8	8	8	0	12	28	+		0	0	0	0		32
PHF	n/a	0.50	n/a	**0.50**	n/a	0.50	0.50	**0.50**	n/a	0.75	n/a	**0.75**	0.50	0.38	n/a	**0.58**	0.89			n/a	n/a	n/a	n/a		0.56

** Calculated peak hour occurs during the first or last hour of shift and therefore may be invalid. **

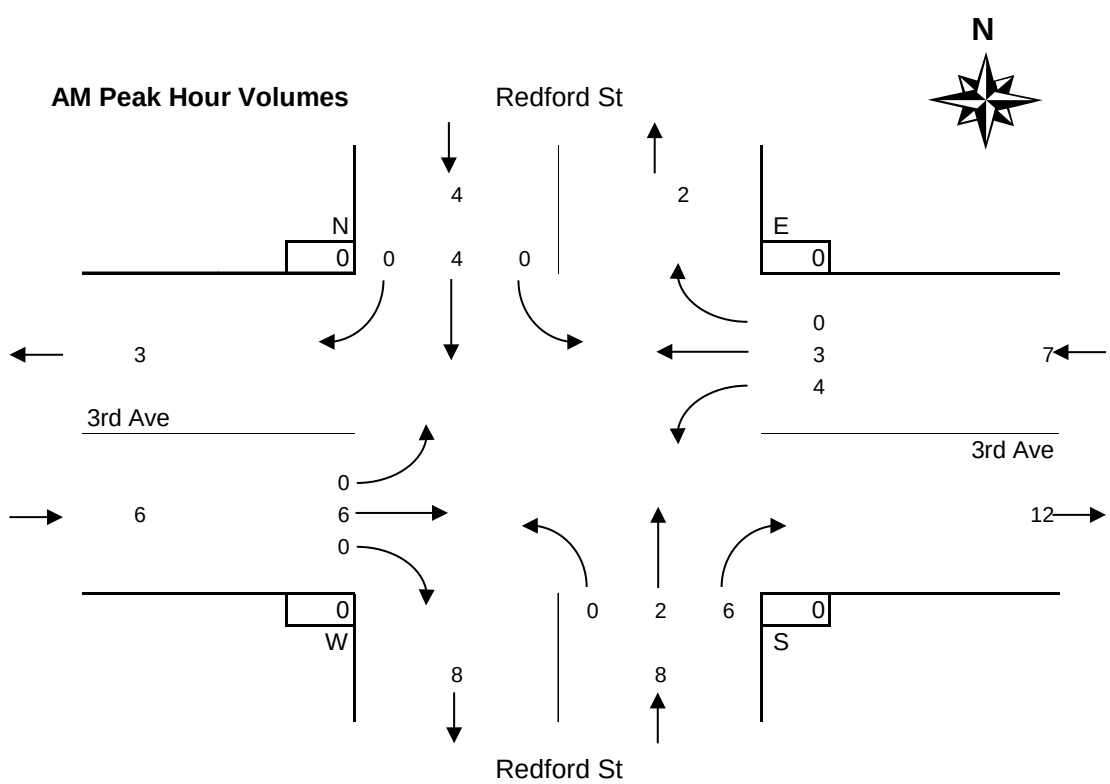

MD Peak Period
Articulated Trucks

3rd Avenue @ Redford Street
Wednesday, September 27, 2017

Time Period Begins	Redford St NORTH Approach				Redford St SOUTH Approach				3rd Ave WEST Approach				3rd Ave EAST Approach				Total Volume		Peak					Conflict	
	Left	Thru	Right	Total	Left	Thru	Right	Total	Left	Thru	Right	Total	Left	Thru	Right	Total	15-min	Hour		N	S	W	E	15 min	Hr
12:00	0	0	0	0	0	0	0	0	0	2	1	3	2	0	0	2	5			0	0	0	0	5	
12:15	0	2	0	2	0	1	1	2	0	0	1	1	5	2	0	7	12			0	0	0	0	8	
12:30	0	0	0	0	0	2	1	3	0	0	1	1	1	0	0	1	5			0	0	0	0	5	
12:45	0	0	0	0	0	1	2	3	0	1	0	1	1	1	0	2	6	28	+	0	0	0	0	5	23
13:00	0	2	0	2	0	0	1	1	0	1	0	1	2	2	0	4	8	31	*	0	0	0	0	5	23
13:15	0	0	0	0	0	1	3	4	0	1	0	1	0	0	0	0	5	24	*	0	0	0	0	5	20
13:30	0	1	0	1	0	0	1	1	0	2	0	2	2	0	0	2	6	25	*	0	0	0	0	5	20
13:45	0	0	0	0	0	0	1	1	0	0	0	0	2	2	1	5	6	25		0	0	0	0	4	19
14:00	0	1	0	1	0	1	0	1	0	1	0	1	4	0	0	4	7	24		0	0	0	0	6	20
14:15	0	0	0	0	0	0	1	1	0	1	0	1	2	3	0	5	7	26		0	0	0	0	4	19
14:30	0	2	0	2	0	1	2	3	0	3	0	3	1	1	0	2	10	30		0	0	0	0	7	21
14:45	1	1	0	2	0	0	2	2	0	1	0	1	0	1	0	1	6	30		0	0	0	0	4	21
n/a																									
n/a																									
n/a																									
n/a																									
Total	1	9	0	**10**	0	7	15	**22**	0	13	3	**16**	22	12	1	**35**	83			0	0	0	0		61
Avg Hr	0	3	0	**3**	0	2	5	**7**	0	4	1	**5**	7	4	0	**12**	28			0	0	0	0		

Peak hour of the intersection

Pk Hr	0	3	0	3	0	2	7	9	0	5	0	5	5	3	0	8	25	*		0	0	0	0		19
15x4	0	8	0	8	0	4	12	16	0	8	0	8	8	8	0	16	32	+		0	0	0	0		32
PHF	n/a	0.38	n/a	**0.38**	n/a	0.50	0.58	**0.56**	n/a	0.63	n/a	**0.63**	0.63	0.38	n/a	**0.50**	0.78			n/a	n/a	n/a	n/a		0.59

Peak hour of conflicting volumes for the intersection

Pk Hr	1	4	0	5	0	2	5	7	0	6	0	6	7	5	0	12	30	*		0	0	0	0		21
15x4	4	8	0	8	0	4	8	12	0	12	0	12	16	12	0	20	40	+		0	0	0	0		44
PHF	0.25	0.50	n/a	**0.63**	n/a	0.50	0.63	**0.58**	n/a	0.50	n/a	**0.50**	0.44	0.42	n/a	**0.60**	0.75			n/a	n/a	n/a	n/a		0.48

MD Peak Hour Volumes

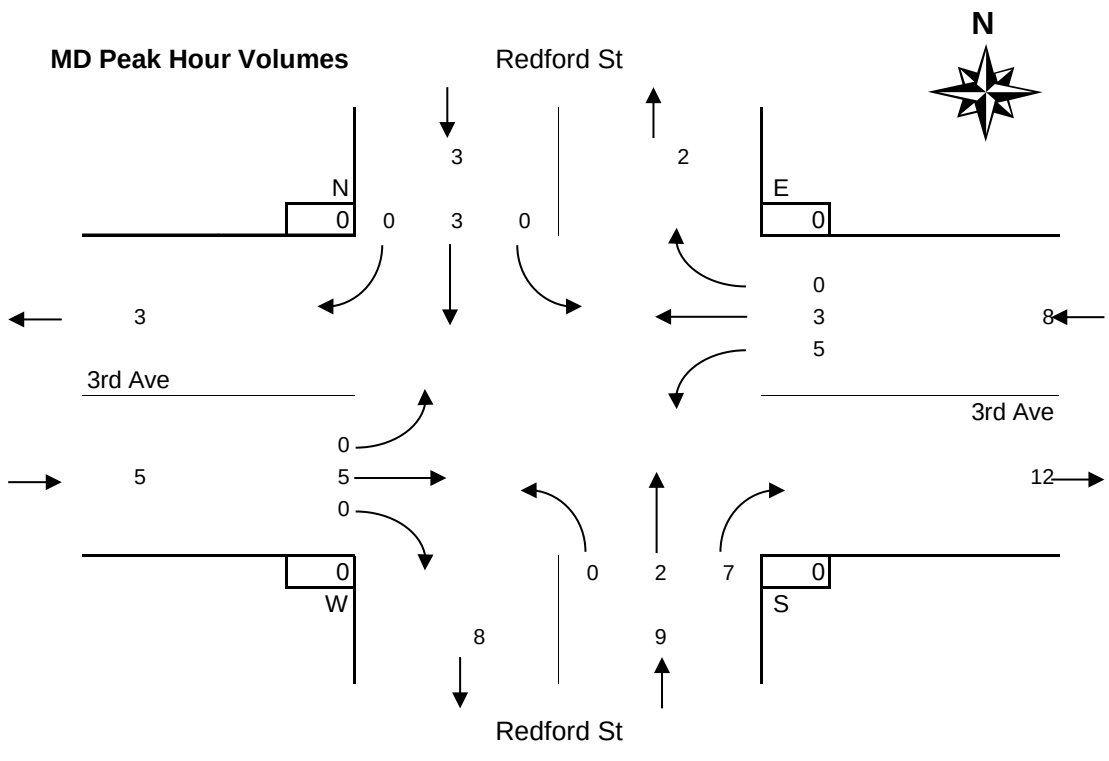

PM Peak Period
Articulated Trucks

3rd Avenue @ Redford Street
Wednesday, September 27, 2017

Time Period Begins	Redford St NORTH Approach				Redford St SOUTH Approach				3rd Ave WEST Approach				3rd Ave EAST Approach				Total Volume		Peak					Conflict	
	Left	Thru	Right	Total	Left	Thru	Right	Total	Left	Thru	Right	Total	Left	Thru	Right	Total	15-min	Hour		N	S	W	E	15 min	Hr
n/a																									
n/a																									
n/a																									
n/a																									
n/a																									
n/a																									
n/a																									
n/a																									
n/a																									
n/a																									
n/a																									
n/a																									
n/a																									
n/a																									
n/a																									
n/a																									
n/a																									
n/a																									
n/a																									
Total																									0
Avg Hr																									

Peak hour of the intersection

Pk Hr																		*							0
15x4																		+							0
PHF																									n/a

Peak hour of conflicting volumes for the intersection

Pk Hr																		*							0
15x4																		+							0
PHF																									n/a

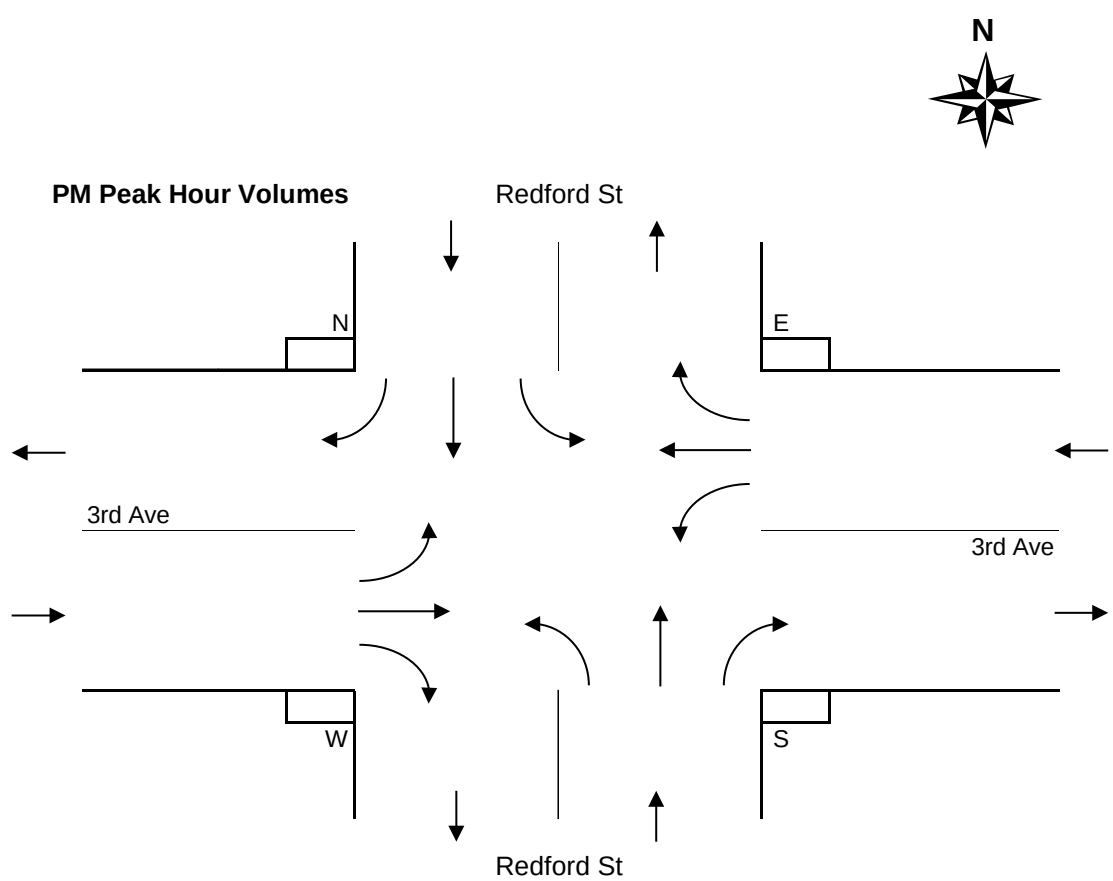

Period Hourly Averages
Articulated Trucks

3rd Avenue @ Redford Street
Wednesday, September 27, 2017

Entire Survey Period
8 Hours

	Redford St				Redford St				3rd Ave				3rd Ave							
	NORTH Approach				SOUTH Approach				WEST Approach				EAST Approach				Total			
	Left	Thru	Right	Total	Left	Thru	Right	Total	Left	Thru	Right	Total	Left	Thru	Right	Total	Volume	N	S	W	E
Total	4	19	0	**23**	0	18	42	**60**	0	31	4	**35**	51	30	2	**83**	201	0	0	0	0
Avg Hr	1	2	0	**3**	0	2	5	**8**	0	4	1	**4**	6	4	0	**10**	25	0	0	0	0

AM Peak Period
5 Hours

	Redford St				Redford St				3rd Ave				3rd Ave							
	NORTH Approach				SOUTH Approach				WEST Approach				EAST Approach				Total			
Totals	Left	Thru	Right	Total	Left	Thru	Right	Total	Left	Thru	Right	Total	Left	Thru	Right	Total	Volume	N	S	W	E
Period	3	10	0	**13**	0	11	27	**38**	0	18	1	**19**	29	18	1	**48**	118	0	0	0	0
Avg Hr	1	2	0	**3**	0	2	5	**8**	0	4	0	**4**	6	4	0	**10**	24	0	0	0	0

MD Peak Period
3 Hours

	Redford St				Redford St				3rd Ave				3rd Ave							
	NORTH Approach				SOUTH Approach				WEST Approach				EAST Approach				Total			
Totals	Left	Thru	Right	Total	Left	Thru	Right	Total	Left	Thru	Right	Total	Left	Thru	Right	Total	Volume	N	S	W	E
Total	1	9	0	**10**	0	7	15	**22**	0	13	3	**16**	22	12	1	**35**	83	0	0	0	0
Avg Hr	0	3	0	**3**	0	2	5	**7**	0	4	1	**5**	7	4	0	**12**	28	0	0	0	0

PM Peak Period
Hours

	Redford St				Redford St				3rd Ave				3rd Ave							
	NORTH Approach				SOUTH Approach				WEST Approach				EAST Approach				Total			
Totals	Left	Thru	Right	Total	Left	Thru	Right	Total	Left	Thru	Right	Total	Left	Thru	Right	Total	Volume	N	S	W	E
Total																				
Avg Hr																				

Average Hour Volumes

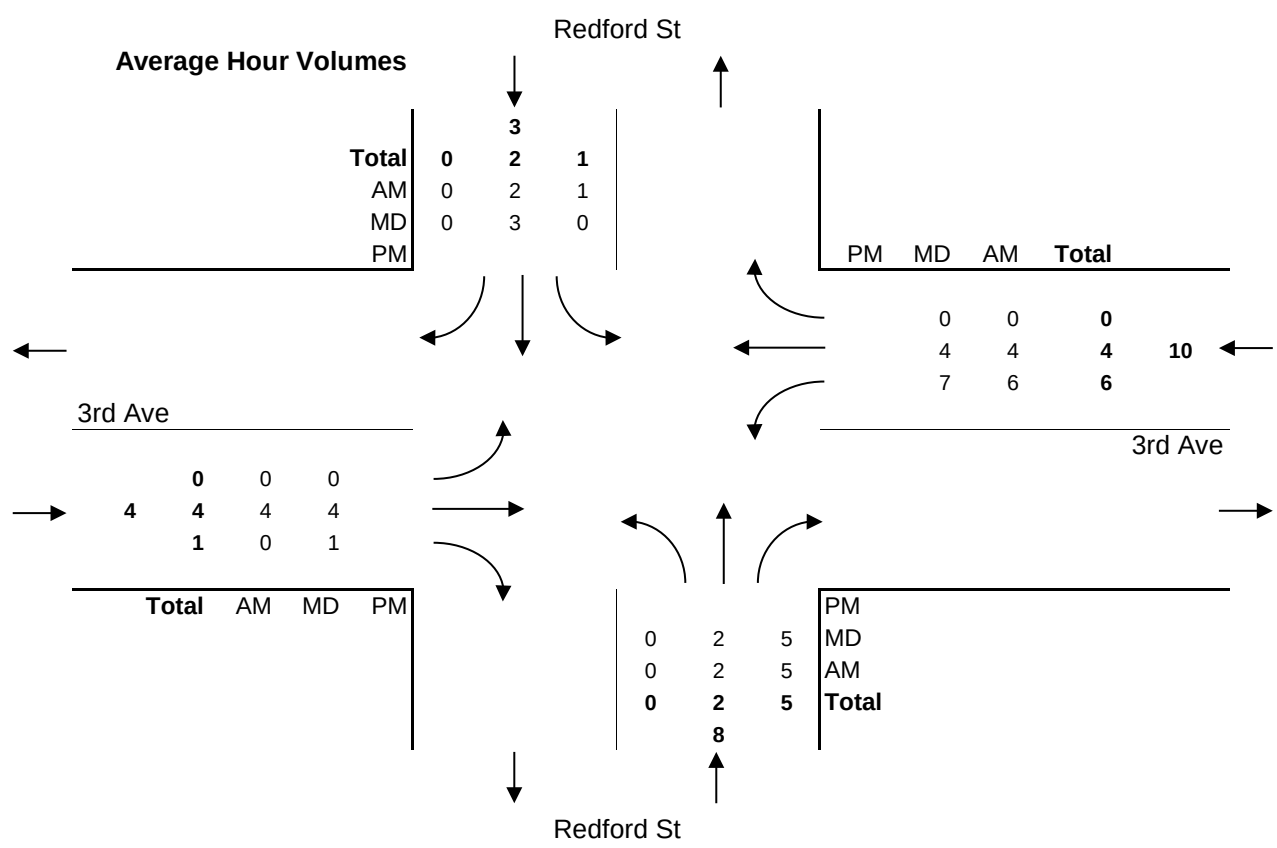

Major Route: 3rd Avenue
Minor Route: Redford Street
Municipality: Port Alberni
Filename: 1-3rd Ave @ Redford St-Sep 27, 2017.xlsx
Location #: 1

Date: September 27, 2017
Day-of-week: Wednesday

East/West Route: 3rd Avenue
Intersection Type: 4-leg
Signalized?: Yes
Weather: Clear and dry

Vehicle Classifications: Regular Vehicles
Buses
Articulated Trucks
Cube Trucks
Dump Trucks
Emergency Trucks
Garbage Trucks
Logging Trucks
RVs
Utility Trucks

This data is for Cube Trucks

Shift	Start	End	Duration
AM	7:00	12:00	5.00
MD	12:00	15:00	3.00
PM			
Total	**7:00**		**8.00**

Notes: 24-hour clock used for reporting (15-minute increments)
North Approach - southbound vehicles approaching intersection from the north
15x4 - 15 min volume (from maximum 15 minute period of movement/approach in peak hour period [*]) x 4
Pedestrians - N indicates pedestrians crossing north approach (east/west)

Comments:

Survey Data
Cube Trucks

3rd Avenue @ Redford Street
Wednesday, September 27, 2017

Time Period Begins	Redford St NORTH Approach				Redford St SOUTH Approach				3rd Ave WEST Approach				3rd Ave EAST Approach				Total Volume		Peak				
	Left	Thru	Right	Total	Left	Thru	Right	Total	Left	Thru	Right	Total	Left	Thru	Right	Total	15-min	Hour		N	S	W	E
7:00	0	0	0	**0**	0	1	0	**1**	0	0	0	**0**	0	0	0	**0**	**1**			0	0	0	0
7:15	0	0	0	**0**	0	1	0	**1**	0	0	0	**0**	0	0	0	**0**	**1**			0	0	0	0
7:30	0	1	0	**1**	0	0	0	**0**	0	0	0	**0**	0	0	0	**0**	**1**			0	0	0	0
7:45	1	0	0	**1**	0	0	0	**0**	0	0	0	**0**	0	0	0	**0**	**1**	4		0	0	0	0
8:00	0	0	0	**0**	0	0	1	**1**	0	0	0	**0**	0	0	0	**0**	**1**	4		0	0	0	0
8:15	0	2	0	**2**	0	1	0	**1**	0	0	0	**0**	0	0	0	**0**	**3**	6		0	0	0	0
8:30	0	1	0	**1**	0	1	0	**1**	0	0	0	**0**	0	0	0	**0**	**2**	7		0	0	0	0
8:45	0	0	0	**0**	0	0	0	**0**	0	0	0	**0**	1	0	0	**1**	**1**	7		0	0	0	0
9:00	0	2	0	**2**	0	1	1	**2**	0	0	0	**0**	0	0	0	**0**	**4**	10		0	0	0	0
9:15	0	1	0	**1**	0	0	1	**1**	0	0	0	**0**	1	0	0	**1**	**3**	10		0	0	0	0
9:30	0	2	0	**2**	0	1	0	**1**	0	0	0	**0**	1	0	1	**2**	**5**	13		0	0	0	0
9:45	0	1	0	**1**	0	0	1	**1**	0	0	0	**0**	0	0	0	**0**	**2**	14		0	0	0	0
10:00	0	1	0	**1**	0	0	1	**1**	0	0	0	**0**	1	0	0	**1**	**3**	13		0	0	0	0
10:15	0	1	0	**1**	0	0	0	**0**	0	0	0	**0**	0	0	0	**0**	**1**	11		0	0	0	0
10:30	0	0	1	**1**	0	0	2	**2**	0	0	1	**1**	1	0	1	**2**	**6**	12		0	0	0	0
10:45	0	0	0	**0**	0	0	2	**2**	0	0	0	**0**	0	0	0	**0**	**2**	12		0	0	0	0
11:00	0	2	0	**2**	0	1	0	**1**	0	0	0	**0**	0	0	0	**0**	**3**	12	*	0	0	0	0
11:15	1	0	0	**1**	0	0	0	**0**	0	0	0	**0**	2	0	1	**3**	**4**	15	*	0	0	0	0
11:30	0	1	0	**1**	0	1	1	**2**	0	0	0	**0**	0	0	1	**1**	**4**	13	*	0	0	0	0
11:45	0	1	0	**1**	0	2	2	**4**	0	0	0	**0**	0	0	0	**0**	**5**	16	+	0	0	0	0
Total	2	16	1	**19**	0	10	12	**22**	0	0	1	**1**	7	0	4	**11**	**53**			0	0	0	0
12:00	0	3	0	**3**	0	0	0	**0**	0	0	0	**0**	0	0	0	**0**	**3**			0	0	0	0
12:15	0	1	0	**1**	0	3	0	**3**	0	0	0	**0**	0	0	0	**0**	**4**			0	0	0	0
12:30	0	2	0	**2**	0	0	0	**0**	0	0	0	**0**	1	0	0	**1**	**3**			0	0	0	0
12:45	0	1	0	**1**	0	4	2	**6**	0	0	0	**0**	0	0	0	**0**	**7**	17	+	0	0	0	0
13:00	0	3	0	**3**	0	3	0	**3**	0	0	0	**0**	0	0	0	**0**	**6**	20	*	0	0	0	0
13:15	0	0	0	**0**	0	2	0	**2**	0	0	0	**0**	0	0	0	**0**	**2**	18	*	0	0	0	0
13:30	0	1	0	**1**	0	3	0	**3**	0	0	0	**0**	1	0	0	**1**	**5**	20	*	0	0	0	0
13:45	0	2	0	**2**	0	1	1	**2**	0	0	0	**0**	0	0	0	**0**	**4**	17		0	0	0	0
14:00	1	2	0	**3**	0	1	1	**2**	0	0	0	**0**	0	0	1	**1**	**6**	17		0	0	0	0
14:15	0	0	0	**0**	0	0	1	**1**	0	0	0	**0**	2	0	0	**2**	**3**	18		0	0	0	0
14:30	0	1	0	**1**	0	1	1	**2**	0	0	0	**0**	0	0	0	**0**	**3**	16		0	0	0	0
14:45	0	2	0	**2**	0	1	0	**1**	0	0	0	**0**	0	0	0	**0**	**3**	15		0	0	0	0
n/a																							
n/a																							
n/a																							
n/a																							
Total	1	18	0	**19**	0	19	6	**25**	0	0	0	**0**	4	0	1	**5**	**49**			0	0	0	0
n/a																							
n/a																							
n/a																							
n/a																							
n/a																							
n/a																							
n/a																							
n/a																							
n/a																							
n/a																							
n/a																							
n/a																							
n/a																							
n/a																							
n/a																							
n/a																							
n/a																							
n/a																							
Total																							

AM Peak Period
Cube Trucks

3rd Avenue @ Redford Street
Wednesday, September 27, 2017

Time Period Begins	Redford St NORTH Approach				Redford St SOUTH Approach				3rd Ave WEST Approach				3rd Ave EAST Approach				Total Volume		Peak					Conflict	
	Left	Thru	Right	Total	Left	Thru	Right	Total	Left	Thru	Right	Total	Left	Thru	Right	Total	15-min	Hour		N	S	W	E	15 min	Hr
7:00	0	0	0	0	0	1	0	1	0	0	0	0	0	0	0	0	1			0	0	0	0	1	
7:15	0	0	0	0	0	1	0	1	0	0	0	0	0	0	0	0	1			0	0	0	0	1	
7:30	0	1	0	1	0	0	0	0	0	0	0	0	0	0	0	0	1			0	0	0	0	1	
7:45	1	0	0	1	0	0	0	0	0	0	0	0	0	0	0	0	1	4		0	0	0	0	1	4
8:00	0	0	0	0	0	0	1	1	0	0	0	0	0	0	0	0	1	4		0	0	0	0	1	4
8:15	0	2	0	2	0	1	0	1	0	0	0	0	0	0	0	0	3	6		0	0	0	0	2	5
8:30	0	1	0	1	0	1	0	1	0	0	0	0	0	0	0	0	2	7		0	0	0	0	1	5
8:45	0	0	0	0	0	0	0	0	0	0	0	0	1	0	0	1	1	7		0	0	0	0	1	5
9:00	0	2	0	2	0	1	1	2	0	0	0	0	0	0	0	0	4	10		0	0	0	0	2	6
9:15	0	1	0	1	0	0	1	1	0	0	0	0	1	0	0	1	3	10		0	0	0	0	2	6
9:30	0	2	0	2	0	1	0	1	0	0	0	0	1	0	1	2	5	13		0	0	0	0	3	8
9:45	0	1	0	1	0	0	1	1	0	0	0	0	0	0	0	0	2	14		0	0	0	0	1	8
10:00	0	1	0	1	0	0	1	1	0	0	0	0	1	0	0	1	3	13		0	0	0	0	2	8
10:15	0	1	0	1	0	0	0	0	0	0	0	0	0	0	0	0	1	11		0	0	0	0	1	7
10:30	0	0	1	1	0	0	2	2	0	0	1	1	1	0	1	2	6	12		0	0	0	0	4	8
10:45	0	0	0	0	0	0	2	2	0	0	0	0	0	0	0	0	2	12		0	0	0	0	2	9
11:00	0	2	0	2	0	1	0	1	0	0	0	0	0	0	0	0	3	12	*	0	0	0	0	2	9
11:15	1	0	0	1	0	0	0	0	0	0	0	0	2	0	1	3	4	15	*	0	0	0	0	3	11
11:30	0	1	0	1	0	1	1	2	0	0	0	0	0	0	1	1	4	13	*	0	0	0	0	3	10
11:45	0	1	0	1	0	2	2	4	0	0	0	0	0	0	0	0	5	16	+	0	0	0	0	4	12
Total	2	16	1	**19**	0	10	12	**22**	0	0	1	**1**	7	0	4	**11**	53			0	0	0	0		32
Avg Hr	0	3	0	**4**	0	2	2	**4**	0	0	0	**0**	1	0	1	**2**	11			0	0	0	0		

Peak hour of the intersection

Pk Hr	1	4	0	5	0	4	3	7	0	0	0	0	2	0	2	4	16	*		0	0	0	0		10
15x4	4	8	0	8	0	8	8	16	0	0	0	0	8	0	4	12	20	+		0	0	0	0		28
PHF	0.25	0.50	n/a	**0.63**	n/a	0.50	0.38	**0.44**	n/a	n/a	n/a	**n/a**	0.25	n/a	0.50	**0.33**	0.80			n/a	n/a	n/a	n/a		0.36

Peak hour of conflicting volumes for the intersection

Pk Hr	1	4	0	5	0	4	3	7	0	0	0	0	2	0	2	4	16	*		0	0	0	0		10
15x4	4	8	0	8	0	8	8	16	0	0	0	0	8	0	4	12	20	+		0	0	0	0		28
PHF	0.25	0.50	n/a	**0.63**	n/a	0.50	0.38	**0.44**	n/a	n/a	n/a	**n/a**	0.25	n/a	0.50	**0.33**	0.80			n/a	n/a	n/a	n/a		0.36

** Calculated peak hour occurs during the first or last hour of shift and therefore may be invalid. **

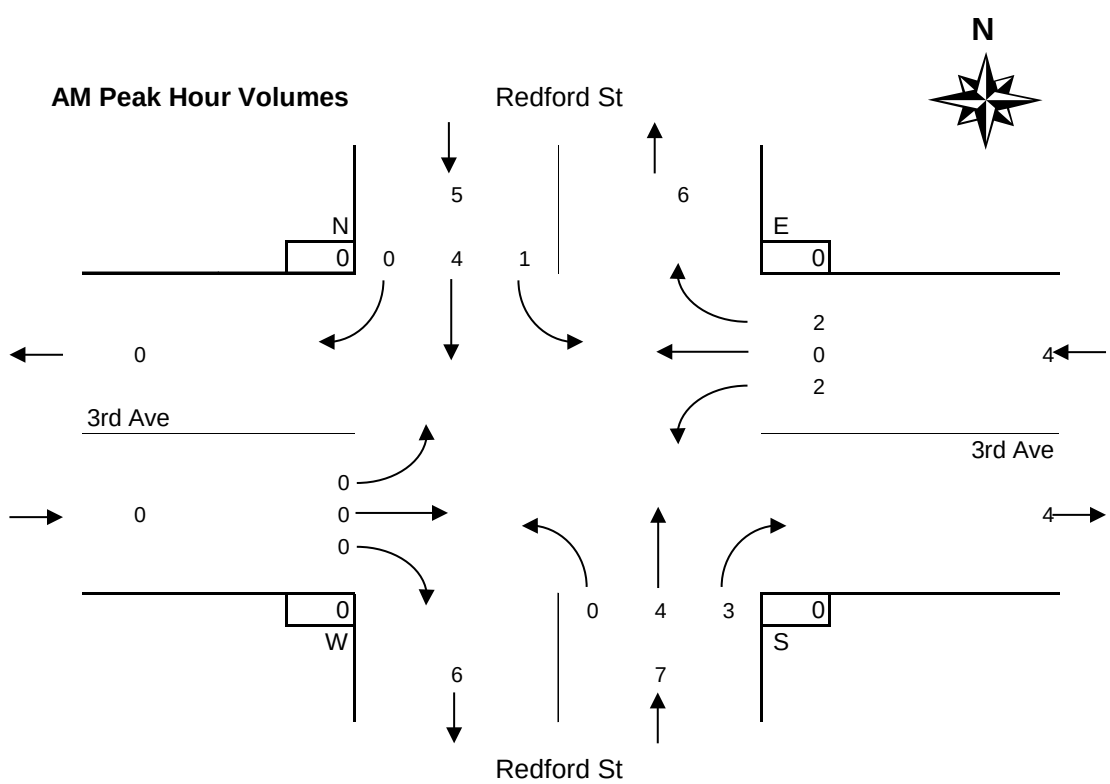

MD Peak Period
Cube Trucks

3rd Avenue @ Redford Street
Wednesday, September 27, 2017

Time Period Begins	Redford St NORTH Approach				Redford St SOUTH Approach				3rd Ave WEST Approach				3rd Ave EAST Approach				Total Volume		Peak					Conflict	
	Left	Thru	Right	Total	Left	Thru	Right	Total	Left	Thru	Right	Total	Left	Thru	Right	Total	15-min	Hour		N	S	W	E	15 min	Hr
12:00	0	3	0	3	0	0	0	0	0	0	0	0	0	0	0	0	3			0	0	0	0	3	
12:15	0	1	0	1	0	3	0	3	0	0	0	0	0	0	0	0	4			0	0	0	0	3	
12:30	0	2	0	2	0	0	0	0	0	0	0	0	1	0	0	1	3			0	0	0	0	3	
12:45	0	1	0	1	0	4	2	6	0	0	0	0	0	0	0	0	7	17	+	0	0	0	0	6	15
13:00	0	3	0	3	0	3	0	3	0	0	0	0	0	0	0	0	6	20	*	0	0	0	0	3	15
13:15	0	0	0	0	0	2	0	2	0	0	0	0	0	0	0	0	2	18	*	0	0	0	0	2	14
13:30	0	1	0	1	0	3	0	3	0	0	0	0	1	0	0	1	5	20	*	0	0	0	0	4	15
13:45	0	2	0	2	0	1	1	2	0	0	0	0	0	0	0	0	4	17		0	0	0	0	2	11
14:00	1	2	0	3	0	1	1	2	0	0	0	0	0	0	1	1	6	17		0	0	0	0	4	12
14:15	0	0	0	0	0	0	1	1	0	0	0	0	2	0	0	2	3	18		0	0	0	0	3	13
14:30	0	1	0	1	0	1	1	2	0	0	0	0	0	0	0	0	3	16		0	0	0	0	2	11
14:45	0	2	0	2	0	1	0	1	0	0	0	0	0	0	0	0	3	15		0	0	0	0	2	11
n/a																									
n/a																									
n/a																									
n/a																									
Total	1	18	0	**19**	0	19	6	**25**	0	0	0	**0**	4	0	1	**5**	49			0	0	0	0		30
Avg Hr	0	6	0	**6**	0	6	2	**8**	0	0	0	**0**	1	0	0	**2**	16			0	0	0	0		

Peak hour of the intersection

Pk Hr	0	5	0	5	0	12	2	14	0	0	0	0	1	0	0	1	20	*		0	0	0	0		15
15x4	0	12	0	12	0	16	8	24	0	0	0	0	4	0	0	4	28	+		0	0	0	0		28
PHF	n/a	0.42	n/a	**0.42**	n/a	0.75	0.25	**0.58**	n/a	n/a	n/a	**n/a**	0.25	n/a	n/a	**0.25**	0.71			n/a	n/a	n/a	n/a		0.54

Peak hour of conflicting volumes for the intersection

Pk Hr	1	5	0	6	0	3	3	6	0	0	0	0	2	0	1	3	15	*		0	0	0	0		9
15x4	4	8	0	12	0	4	4	8	0	0	0	0	8	0	4	8	24	+		0	0	0	0		20
PHF	0.25	0.63	n/a	**0.50**	n/a	0.75	0.75	**0.75**	n/a	n/a	n/a	**n/a**	0.25	n/a	0.25	**0.38**	0.63			n/a	n/a	n/a	n/a		0.45

MD Peak Hour Volumes

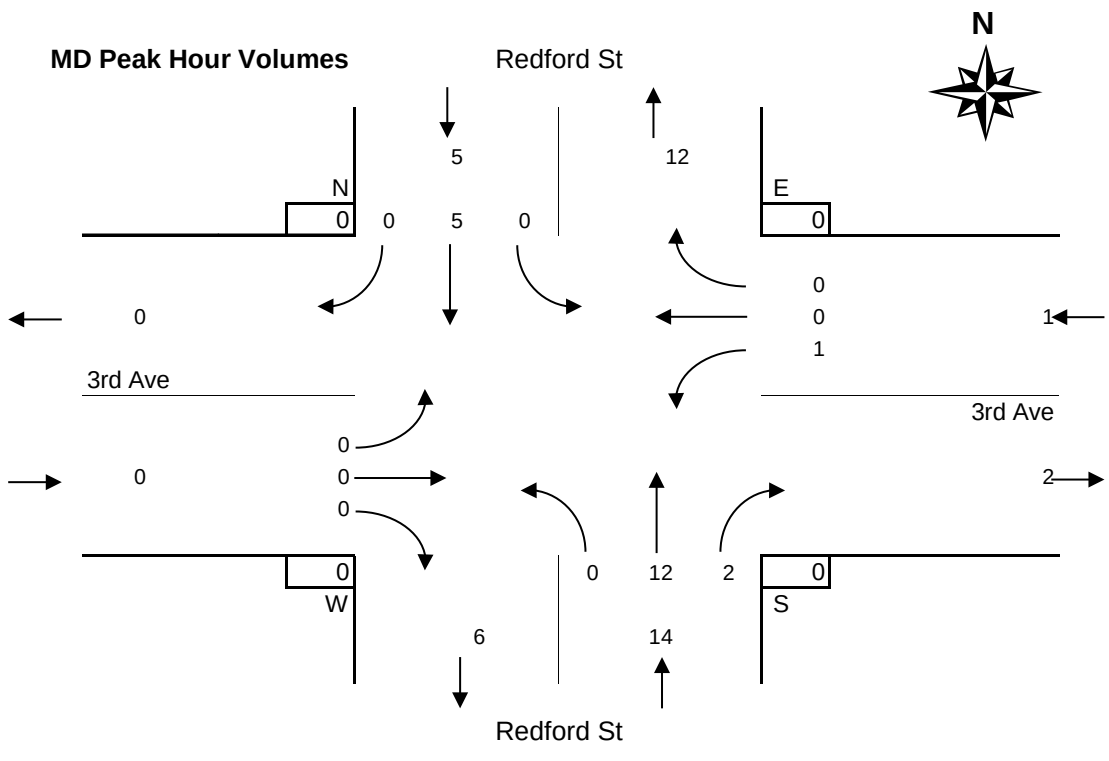

PM Peak Period
Cube Trucks

3rd Avenue @ Redford Street
Wednesday, September 27, 2017

Time Period Begins	Redford St NORTH Approach				Redford St SOUTH Approach				3rd Ave WEST Approach				3rd Ave EAST Approach				Total Volume		Peak					Conflict	
	Left	Thru	Right	Total	Left	Thru	Right	Total	Left	Thru	Right	Total	Left	Thru	Right	Total	15-min	Hour		N	S	W	E	15 min	Hr
n/a																									
n/a																									
n/a																									
n/a																									
n/a																									
n/a																									
n/a																									
n/a																									
n/a																									
n/a																									
n/a																									
n/a																									
n/a																									
n/a																									
n/a																									
n/a																									
n/a																									
n/a																									
n/a																									
Total																									0
Avg Hr																									

Peak hour of the intersection

Pk Hr																		*							0
15x4																		+							0
PHF																									n/a

Peak hour of conflicting volumes for the intersection

Pk Hr																		*							0
15x4																		+							0
PHF																									n/a

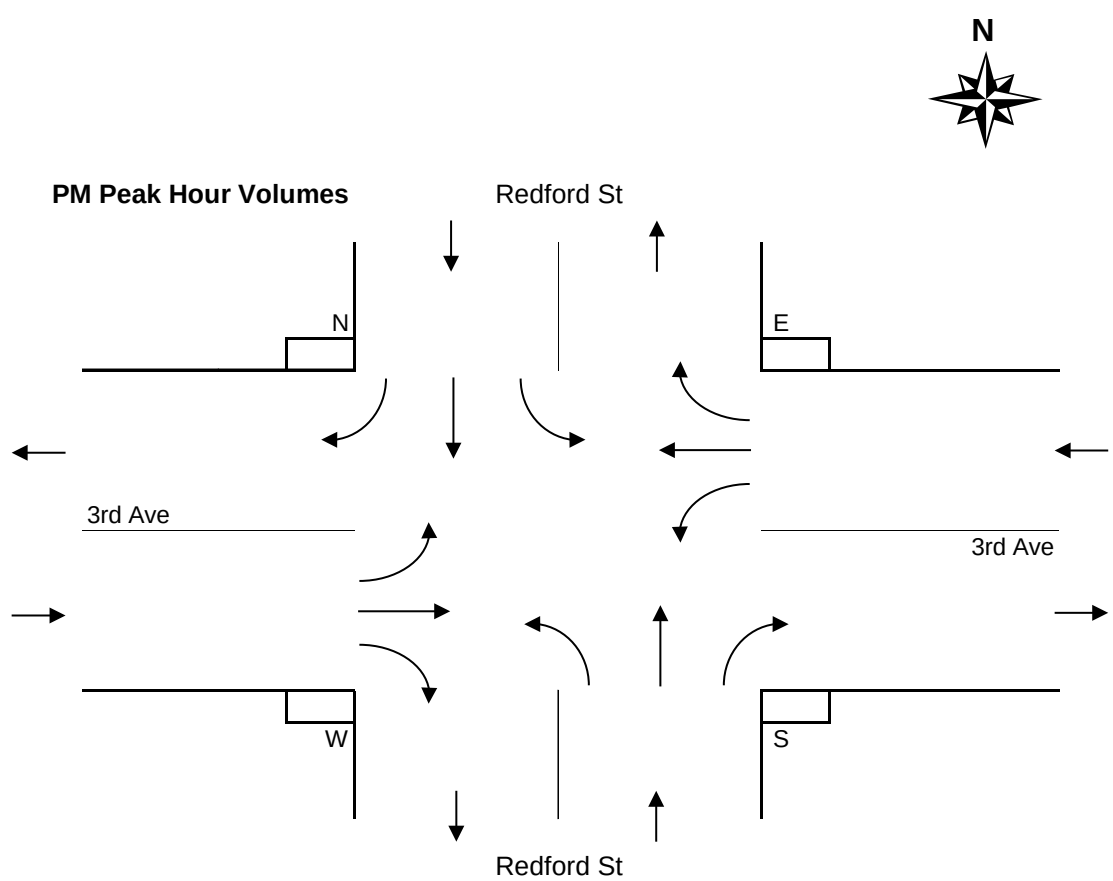

Period Hourly Averages
Cube Trucks

3rd Avenue @ Redford Street
Wednesday, September 27, 2017

Entire Survey Period
8 Hours

	Redford St				Redford St				3rd Ave				3rd Ave							
	NORTH Approach				SOUTH Approach				WEST Approach				EAST Approach				Total			
	Left	Thru	Right	Total	Left	Thru	Right	Total	Left	Thru	Right	Total	Left	Thru	Right	Total	Volume	N	S	W	E
Total	3	34	1	**38**	0	29	18	**47**	0	0	1	**1**	11	0	5	**16**	102	0	0	0	0
Avg Hr	0	4	0	**5**	0	4	2	**6**	0	0	0	**0**	1	0	1	**2**	13	0	0	0	0

AM Peak Period
5 Hours

	Redford St				Redford St				3rd Ave				3rd Ave							
	NORTH Approach				SOUTH Approach				WEST Approach				EAST Approach				Total			
Totals	Left	Thru	Right	Total	Left	Thru	Right	Total	Left	Thru	Right	Total	Left	Thru	Right	Total	Volume	N	S	W	E
Period	2	16	1	**19**	0	10	12	**22**	0	0	1	**1**	7	0	4	**11**	53	0	0	0	0
Avg Hr	0	3	0	**4**	0	2	2	**4**	0	0	0	**0**	1	0	1	**2**	11	0	0	0	0

MD Peak Period
3 Hours

	Redford St				Redford St				3rd Ave				3rd Ave							
	NORTH Approach				SOUTH Approach				WEST Approach				EAST Approach				Total			
Totals	Left	Thru	Right	Total	Left	Thru	Right	Total	Left	Thru	Right	Total	Left	Thru	Right	Total	Volume	N	S	W	E
Total	1	18	0	**19**	0	19	6	**25**	0	0	0	**0**	4	0	1	**5**	49	0	0	0	0
Avg Hr	0	6	0	**6**	0	6	2	**8**	0	0	0	**0**	1	0	0	**2**	16	0	0	0	0

PM Peak Period
Hours

	Redford St				Redford St				3rd Ave				3rd Ave							
	NORTH Approach				SOUTH Approach				WEST Approach				EAST Approach				Total			
Totals	Left	Thru	Right	Total	Left	Thru	Right	Total	Left	Thru	Right	Total	Left	Thru	Right	Total	Volume	N	S	W	E
Total																				
Avg Hr																				

Average Hour Volumes

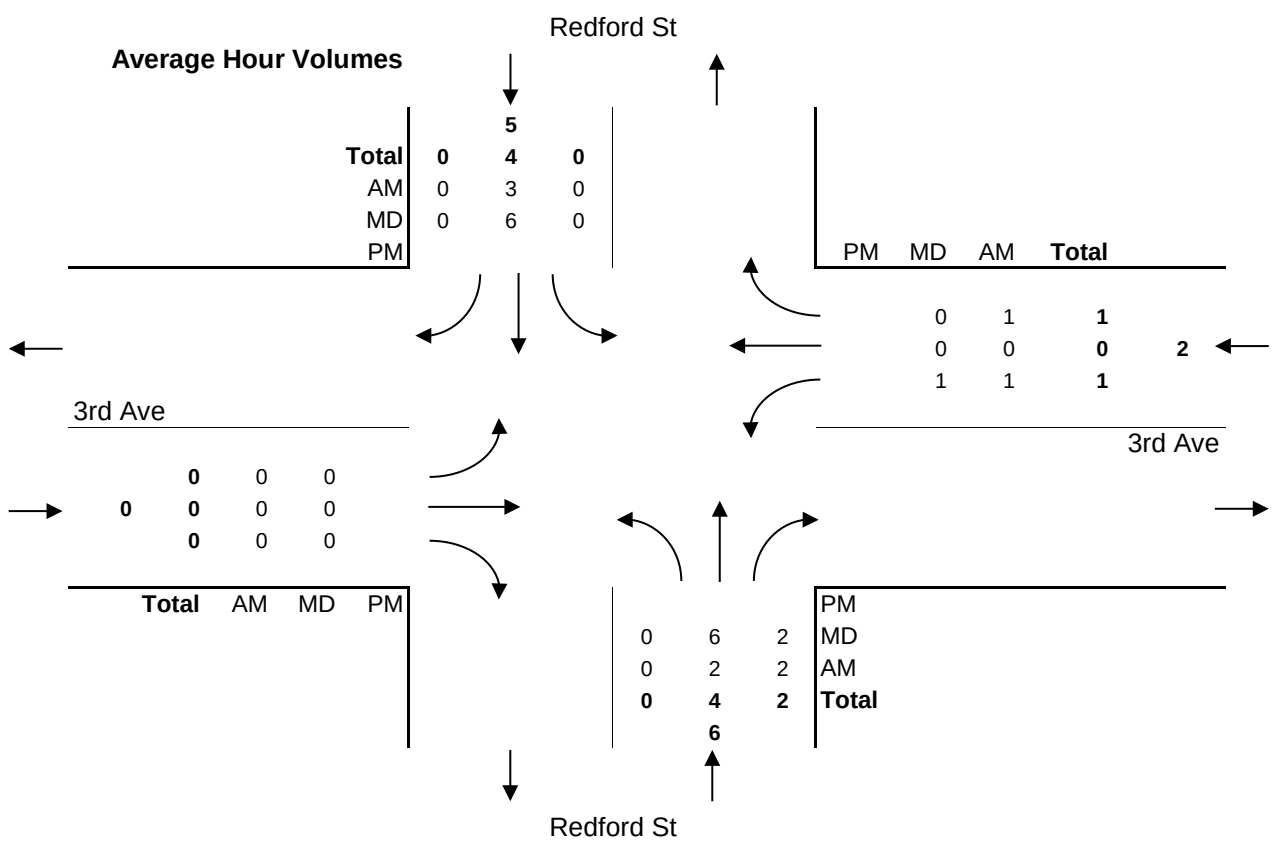

Major Route: 3rd Avenue
Minor Route: Redford Street
Municipality: Port Alberni
Filename: 1-3rd Ave @ Redford St-Sep 27, 2017.xlsx
Location #: 1

Date: September 27, 2017
Day-of-week: Wednesday

East/West Route: 3rd Avenue
Intersection Type: 4-leg
Signalized?: Yes
Weather: Clear and dry

Vehicle Classifications: Regular Vehicles
Buses
Articulated Trucks
Cube Trucks
Dump Trucks
Emergency Trucks
Garbage Trucks
Logging Trucks
RVs
Utility Trucks

This data is for Dump Trucks

Shift	Start	End	Duration
AM	7:00	12:00	5.00
MD	12:00	15:00	3.00
PM			
Total	**7:00**		**8.00**

Notes: 24-hour clock used for reporting (15-minute increments)
North Approach - southbound vehicles approaching intersection from the north
15x4 - 15 min volume (from maximum 15 minute period of movement/approach in peak hour period [*]) x 4
Pedestrians - N indicates pedestrians crossing north approach (east/west)

Comments:

Survey Data
Dump Trucks

3rd Avenue @ Redford Street
Wednesday, September 27, 2017

Time Period Begins	Redford St NORTH Approach				Redford St SOUTH Approach				3rd Ave WEST Approach				3rd Ave EAST Approach				Total Volume		Peak				
	Left	Thru	Right	Total	Left	Thru	Right	Total	Left	Thru	Right	Total	Left	Thru	Right	Total	15-min	Hour		N	S	W	E
7:00	0	0	0	**0**	0	0	0	**0**	0	0	0	**0**	0	0	0	**0**	**0**			0	0	0	0
7:15	0	0	0	**0**	0	0	0	**0**	0	0	0	**0**	0	0	0	**0**	**0**			0	0	0	0
7:30	0	1	0	**1**	0	0	0	**0**	0	0	0	**0**	0	0	0	**0**	**1**			0	0	0	0
7:45	1	1	0	**2**	0	2	0	**2**	0	0	0	**0**	0	0	0	**0**	**4**	5		0	0	0	0
8:00	0	1	0	**1**	0	0	0	**0**	0	0	0	**0**	0	0	0	**0**	**1**	6		0	0	0	0
8:15	0	0	0	**0**	0	2	0	**2**	0	0	0	**0**	0	0	0	**0**	**2**	8		0	0	0	0
8:30	0	1	0	**1**	0	0	0	**0**	0	0	0	**0**	0	0	0	**0**	**1**	8		0	0	0	0
8:45	0	2	0	**2**	0	0	0	**0**	0	0	0	**0**	0	0	0	**0**	**2**	6		0	0	0	0
9:00	0	1	0	**1**	0	1	0	**1**	0	0	0	**0**	0	0	0	**0**	**2**	7		0	0	0	0
9:15	0	0	0	**0**	0	1	0	**1**	0	0	0	**0**	0	0	0	**0**	**1**	6		0	0	0	0
9:30	0	1	0	**1**	0	2	0	**2**	0	0	0	**0**	0	0	0	**0**	**3**	8		0	0	0	0
9:45	0	1	0	**1**	0	1	0	**1**	0	0	0	**0**	0	0	1	**1**	**3**	9		0	0	0	0
10:00	0	0	0	**0**	0	1	0	**1**	0	0	0	**0**	0	0	0	**0**	**1**	8		0	0	0	0
10:15	0	1	0	**1**	0	0	0	**0**	0	0	0	**0**	0	0	0	**0**	**1**	8		0	0	0	0
10:30	0	0	0	**0**	0	2	1	**3**	0	0	0	**0**	0	0	0	**0**	**3**	8		0	0	0	0
10:45	0	1	0	**1**	0	1	0	**1**	0	0	0	**0**	0	0	0	**0**	**2**	7		0	0	0	0
11:00	0	0	0	**0**	0	0	0	**0**	0	0	0	**0**	0	0	0	**0**	**0**	6	*	0	0	0	0
11:15	0	0	0	**0**	0	1	0	**1**	0	0	0	**0**	0	0	0	**0**	**1**	6	*	0	0	0	0
11:30	0	0	0	**0**	0	1	1	**2**	0	0	0	**0**	0	0	0	**0**	**2**	5	*	0	0	0	0
11:45	0	1	0	**1**	0	1	0	**1**	0	0	0	**0**	0	0	0	**0**	**2**	5	+	0	0	0	0
Total	1	12	0	**13**	0	16	2	**18**	0	0	0	**0**	0	0	1	**1**	**32**			0	0	0	0
12:00	0	0	0	**0**	0	0	1	**1**	0	0	0	**0**	1	0	0	**1**	**2**			0	0	0	0
12:15	0	0	0	**0**	0	1	0	**1**	0	0	0	**0**	0	0	1	**1**	**2**			0	0	0	0
12:30	0	1	0	**1**	0	0	0	**0**	0	0	0	**0**	0	0	0	**0**	**1**			0	0	0	0
12:45	0	1	0	**1**	0	1	0	**1**	0	0	0	**0**	0	0	0	**0**	**2**	7	+	0	0	0	0
13:00	1	0	0	**1**	0	2	0	**2**	0	0	0	**0**	0	0	0	**0**	**3**	8	*	0	0	0	0
13:15	0	0	0	**0**	0	2	0	**2**	0	0	0	**0**	0	0	0	**0**	**2**	8	*	0	0	0	0
13:30	0	0	0	**0**	0	2	0	**2**	0	0	0	**0**	0	0	0	**0**	**2**	9	*	0	0	0	0
13:45	0	2	0	**2**	0	0	0	**0**	0	0	0	**0**	0	0	0	**0**	**2**	9		0	0	0	0
14:00	0	0	0	**0**	0	0	0	**0**	0	0	0	**0**	0	0	0	**0**	**0**	6		0	0	0	0
14:15	0	1	0	**1**	0	2	0	**2**	0	0	0	**0**	0	0	0	**0**	**3**	7		0	0	0	0
14:30	1	1	0	**2**	0	2	0	**2**	0	0	0	**0**	0	0	0	**0**	**4**	9		0	0	0	0
14:45	0	1	0	**1**	0	2	0	**2**	0	0	0	**0**	0	0	0	**0**	**3**	10		0	0	0	0
n/a																							
n/a																							
n/a																							
n/a																							
Total	2	7	0	**9**	0	14	1	**15**	0	0	0	**0**	1	0	1	**2**	**26**			0	0	0	0
n/a																							
n/a																							
n/a																							
n/a																							
n/a																							
n/a																							
n/a																							
n/a																							
n/a																							
n/a																							
n/a																							
n/a																							
n/a																							
n/a																							
n/a																							
n/a																							
n/a																							
n/a																							
Total																							

AM Peak Period
Dump Trucks

3rd Avenue @ Redford Street
Wednesday, September 27, 2017

Time Period Begins	Redford St NORTH Approach				Redford St SOUTH Approach				3rd Ave WEST Approach				3rd Ave EAST Approach				Total Volume		Peak					Conflict	
	Left	Thru	Right	Total	Left	Thru	Right	Total	Left	Thru	Right	Total	Left	Thru	Right	Total	15-min	Hour		N	S	W	E	15 min	Hr
7:00	0	0	0	0	0	0	0	0	0	0	0	0	0	0	0	0	0			0	0	0	0	0	
7:15	0	0	0	0	0	0	0	0	0	0	0	0	0	0	0	0	0			0	0	0	0	0	
7:30	0	1	0	1	0	0	0	0	0	0	0	0	0	0	0	0	1			0	0	0	0	1	
7:45	1	1	0	2	0	2	0	2	0	0	0	0	0	0	0	0	4	5		0	0	0	0	3	4
8:00	0	1	0	1	0	0	0	0	0	0	0	0	0	0	0	0	1	6		0	0	0	0	1	5
8:15	0	0	0	0	0	2	0	2	0	0	0	0	0	0	0	0	2	8		0	0	0	0	2	7
8:30	0	1	0	1	0	0	0	0	0	0	0	0	0	0	0	0	1	8		0	0	0	0	1	7
8:45	0	2	0	2	0	0	0	0	0	0	0	0	0	0	0	0	2	6		0	0	0	0	2	6
9:00	0	1	0	1	0	1	0	1	0	0	0	0	0	0	0	0	2	7		0	0	0	0	1	6
9:15	0	0	0	0	0	1	0	1	0	0	0	0	0	0	0	0	1	6		0	0	0	0	1	5
9:30	0	1	0	1	0	2	0	2	0	0	0	0	0	0	0	0	3	8		0	0	0	0	2	6
9:45	0	1	0	1	0	1	0	1	0	0	0	0	0	0	1	1	3	9		0	0	0	0	2	6
10:00	0	0	0	0	0	1	0	1	0	0	0	0	0	0	0	0	1	8		0	0	0	0	1	6
10:15	0	1	0	1	0	0	0	0	0	0	0	0	0	0	0	0	1	8		0	0	0	0	1	6
10:30	0	0	0	0	0	2	1	3	0	0	0	0	0	0	0	0	3	8		0	0	0	0	3	7
10:45	0	1	0	1	0	1	0	1	0	0	0	0	0	0	0	0	2	7		0	0	0	0	1	6
11:00	0	0	0	0	0	0	0	0	0	0	0	0	0	0	0	0	0	6	*	0	0	0	0	0	5
11:15	0	0	0	0	0	1	0	1	0	0	0	0	0	0	0	0	1	6	*	0	0	0	0	1	5
11:30	0	0	0	0	0	1	1	2	0	0	0	0	0	0	0	0	2	5	*	0	0	0	0	2	4
11:45	0	1	0	1	0	1	0	1	0	0	0	0	0	0	0	0	2	5	+	0	0	0	0	1	4
Total	1	12	0	**13**	0	16	2	**18**	0	0	0	**0**	0	0	1	**1**	32			0	0	0	0		20
Avg Hr	0	2	0	**3**	0	3	0	**4**	0	0	0	**0**	0	0	0	**0**	6			0	0	0	0		

Peak hour of the intersection

Pk Hr	0	1	0	1	0	3	1	4	0	0	0	0	0	0	0	0	5	*		0	0	0	0		4
15x4	0	4	0	4	0	4	4	8	0	0	0	0	0	0	0	0	8	+		0	0	0	0		8
PHF	n/a	0.25	n/a	**0.25**	n/a	0.75	0.25	**0.50**	n/a	n/a	n/a	**n/a**	n/a	n/a	n/a	**n/a**	0.63			n/a	n/a	n/a	n/a		0.50

Peak hour of conflicting volumes for the intersection

Pk Hr	0	1	0	1	0	3	1	4	0	0	0	0	0	0	0	0	5	*		0	0	0	0		4
15x4	0	4	0	4	0	4	4	8	0	0	0	0	0	0	0	0	8	+		0	0	0	0		8
PHF	n/a	0.25	n/a	**0.25**	n/a	0.75	0.25	**0.50**	n/a	n/a	n/a	**n/a**	n/a	n/a	n/a	**n/a**	0.63			n/a	n/a	n/a	n/a		0.50

** Calculated peak hour occurs during the first or last hour of shift and therefore may be invalid. **

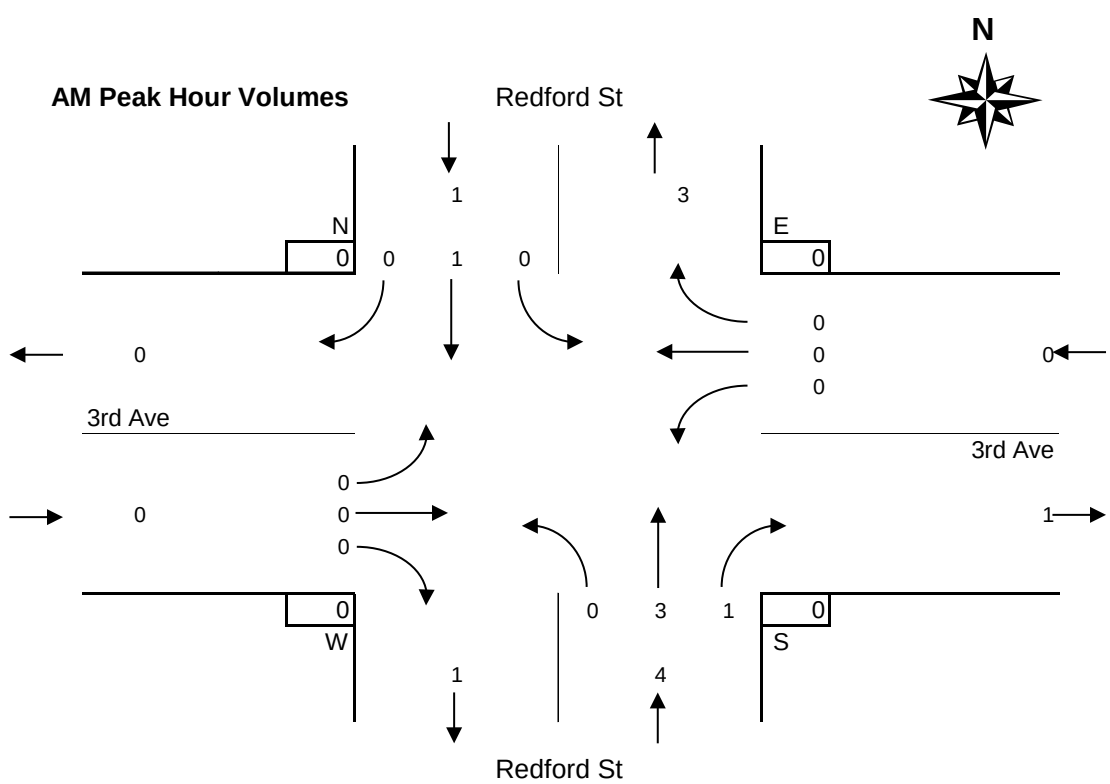

MD Peak Period
Dump Trucks

3rd Avenue @ Redford Street
Wednesday, September 27, 2017

Time Period Begins	Redford St NORTH Approach				Redford St SOUTH Approach				3rd Ave WEST Approach				3rd Ave EAST Approach				Total Volume		Peak					Conflict	
	Left	Thru	Right	Total	Left	Thru	Right	Total	Left	Thru	Right	Total	Left	Thru	Right	Total	15-min	Hour		N	S	W	E	15 min	Hr
12:00	0	0	0	0	0	0	1	1	0	0	0	0	1	0	0	1	2			0	0	0	0	2	
12:15	0	0	0	0	0	1	0	1	0	0	0	0	0	0	1	1	2			0	0	0	0	2	
12:30	0	1	0	1	0	0	0	0	0	0	0	0	0	0	0	0	1			0	0	0	0	1	
12:45	0	1	0	1	0	1	0	1	0	0	0	0	0	0	0	0	2	7	+	0	0	0	0	1	6
13:00	1	0	0	1	0	2	0	2	0	0	0	0	0	0	0	0	3	8	*	0	0	0	0	3	7
13:15	0	0	0	0	0	2	0	2	0	0	0	0	0	0	0	0	2	8	*	0	0	0	0	2	7
13:30	0	0	0	0	0	2	0	2	0	0	0	0	0	0	0	0	2	9	*	0	0	0	0	2	8
13:45	0	2	0	2	0	0	0	0	0	0	0	0	0	0	0	0	2	9		0	0	0	0	2	9
14:00	0	0	0	0	0	0	0	0	0	0	0	0	0	0	0	0	0	6		0	0	0	0	0	6
14:15	0	1	0	1	0	2	0	2	0	0	0	0	0	0	0	0	3	7		0	0	0	0	2	6
14:30	1	1	0	2	0	2	0	2	0	0	0	0	0	0	0	0	4	9		0	0	0	0	3	7
14:45	0	1	0	1	0	2	0	2	0	0	0	0	0	0	0	0	3	10		0	0	0	0	2	7
n/a																									
n/a																									
n/a																									
n/a																									
Total	2	7	0	**9**	0	14	1	**15**	0	0	0	**0**	1	0	1	**2**	26			0	0	0	0		18
Avg Hr	1	2	0	**3**	0	5	0	**5**	0	0	0	**0**	0	0	0	**1**	9			0	0	0	0		

Peak hour of the intersection

Pk Hr	1	1	0	2	0	7	0	7	0	0	0	0	0	0	0	0	9	*		0	0	0	0		8
15x4	4	4	0	4	0	8	0	8	0	0	0	0	0	0	0	0	12	+		0	0	0	0		12
PHF	0.25	0.25	n/a	**0.50**	n/a	0.88	n/a	**0.88**	n/a	n/a	n/a	**n/a**	n/a	n/a	n/a	**n/a**	0.75			n/a	n/a	n/a	n/a		0.67

Peak hour of conflicting volumes for the intersection

Pk Hr	1	3	0	4	0	6	0	6	0	0	0	0	0	0	0	0	10	*		0	0	0	0		7
15x4	4	4	0	8	0	8	0	8	0	0	0	0	0	0	0	0	16	+		0	0	0	0		12
PHF	0.25	0.75	n/a	**0.50**	n/a	0.75	n/a	**0.75**	n/a	n/a	n/a	**n/a**	n/a	n/a	n/a	**n/a**	0.63			n/a	n/a	n/a	n/a		0.58

MD Peak Hour Volumes

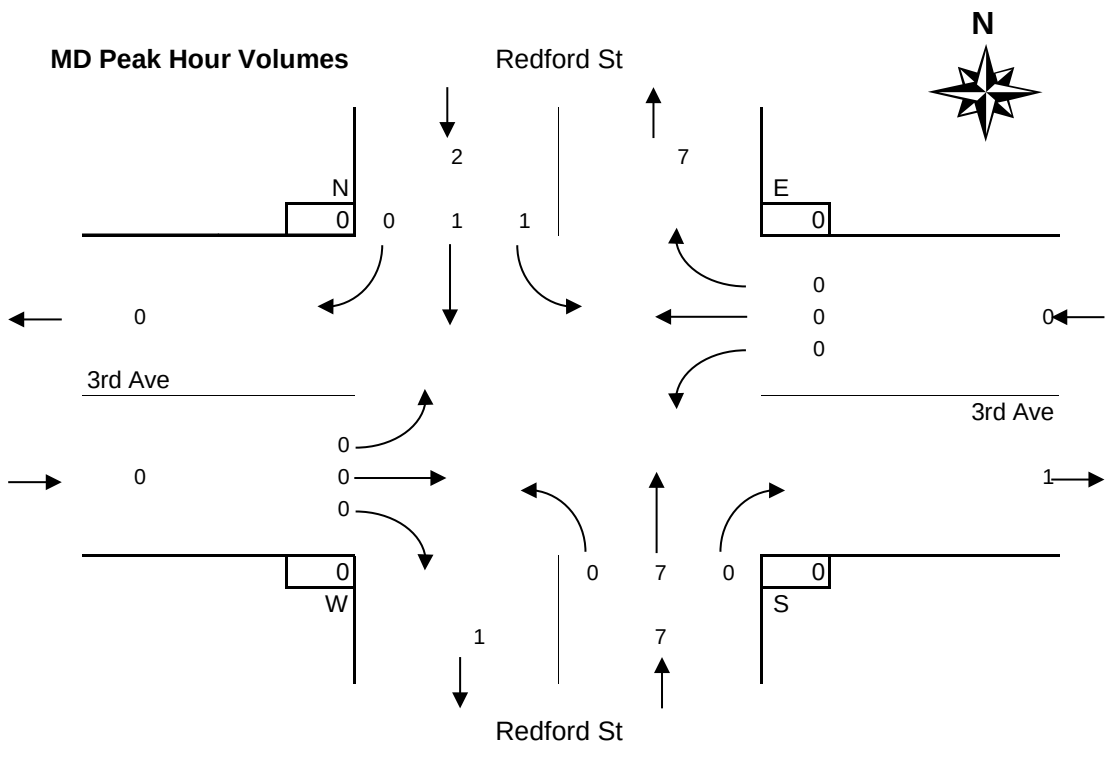

PM Peak Period
Dump Trucks

3rd Avenue @ Redford Street
Wednesday, September 27, 2017

Time Period Begins	Redford St NORTH Approach				Redford St SOUTH Approach				3rd Ave WEST Approach				3rd Ave EAST Approach				Total Volume		Peak					Conflict	
	Left	Thru	Right	Total	Left	Thru	Right	Total	Left	Thru	Right	Total	Left	Thru	Right	Total	15-min	Hour		N	S	W	E	15 min	Hr
n/a																									
n/a																									
n/a																									
n/a																									
n/a																									
n/a																									
n/a																									
n/a																									
n/a																									
n/a																									
n/a																									
n/a																									
n/a																									
n/a																									
n/a																									
n/a																									
n/a																									
n/a																									
n/a																									
Total																									0
Avg Hr																									

Peak hour of the intersection

Pk Hr																		*							0
15x4																		+							0
PHF																									n/a

Peak hour of conflicting volumes for the intersection

Pk Hr																		*							0
15x4																		+							0
PHF																									n/a

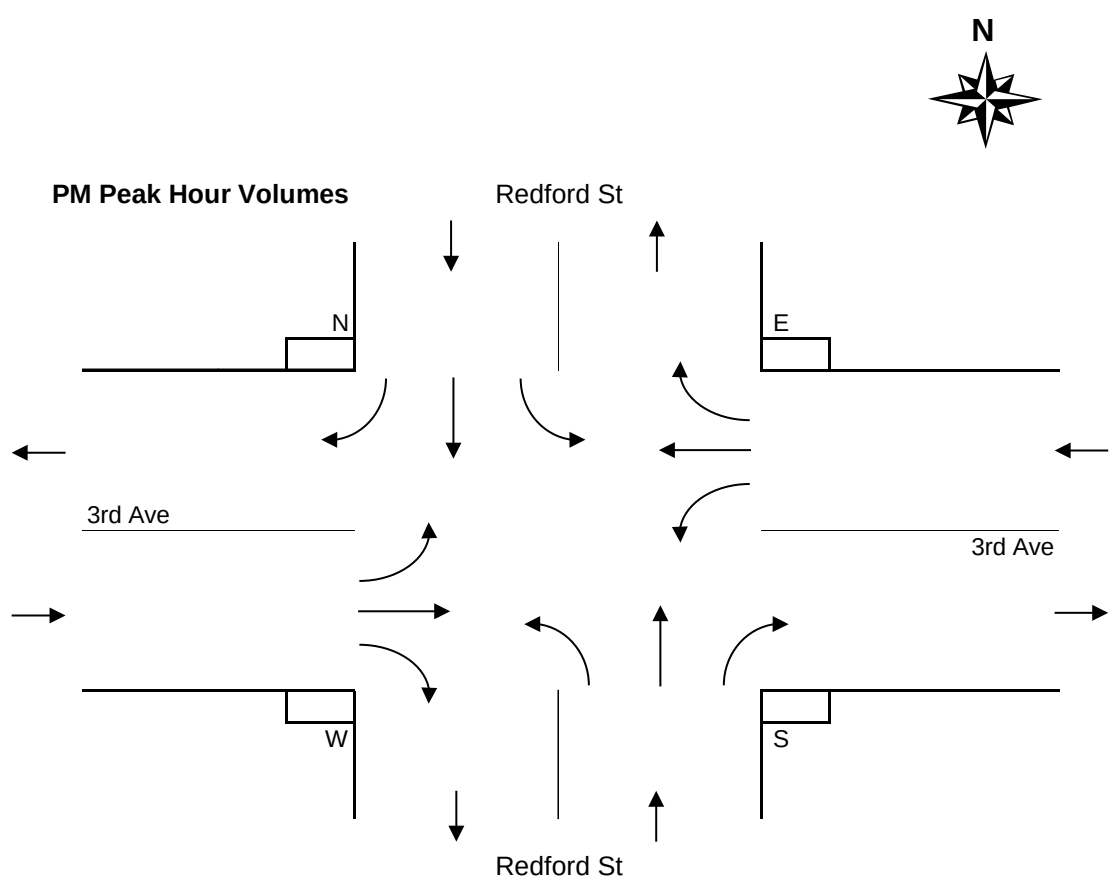

Period Hourly Averages
Dump Trucks

3rd Avenue @ Redford Street
Wednesday, September 27, 2017

Entire Survey Period
8 Hours

	Redford St				Redford St				3rd Ave				3rd Ave							
	NORTH Approach				SOUTH Approach				WEST Approach				EAST Approach				Total			
	Left	Thru	Right	Total	Left	Thru	Right	Total	Left	Thru	Right	Total	Left	Thru	Right	Total	Volume	N	S	W	E
Total	3	19	0	**22**	0	30	3	**33**	0	0	0	**0**	1	0	2	**3**	58	0	0	0	0
Avg Hr	0	2	0	**3**	0	4	0	**4**	0	0	0	**0**	0	0	0	**0**	7	0	0	0	0

AM Peak Period
5 Hours

	Redford St				Redford St				3rd Ave				3rd Ave							
	NORTH Approach				SOUTH Approach				WEST Approach				EAST Approach				Total			
Totals	Left	Thru	Right	Total	Left	Thru	Right	Total	Left	Thru	Right	Total	Left	Thru	Right	Total	Volume	N	S	W	E
Period	1	12	0	**13**	0	16	2	**18**	0	0	0	**0**	0	0	1	**1**	32	0	0	0	0
Avg Hr	0	2	0	**3**	0	3	0	**4**	0	0	0	**0**	0	0	0	**0**	6	0	0	0	0

MD Peak Period
3 Hours

	Redford St				Redford St				3rd Ave				3rd Ave							
	NORTH Approach				SOUTH Approach				WEST Approach				EAST Approach				Total			
Totals	Left	Thru	Right	Total	Left	Thru	Right	Total	Left	Thru	Right	Total	Left	Thru	Right	Total	Volume	N	S	W	E
Total	2	7	0	**9**	0	14	1	**15**	0	0	0	**0**	1	0	1	**2**	26	0	0	0	0
Avg Hr	1	2	0	**3**	0	5	0	**5**	0	0	0	**0**	0	0	0	**1**	9	0	0	0	0

PM Peak Period
Hours

	Redford St				Redford St				3rd Ave				3rd Ave							
	NORTH Approach				SOUTH Approach				WEST Approach				EAST Approach				Total			
Totals	Left	Thru	Right	Total	Left	Thru	Right	Total	Left	Thru	Right	Total	Left	Thru	Right	Total	Volume	N	S	W	E
Total																				
Avg Hr																				

Average Hour Volumes

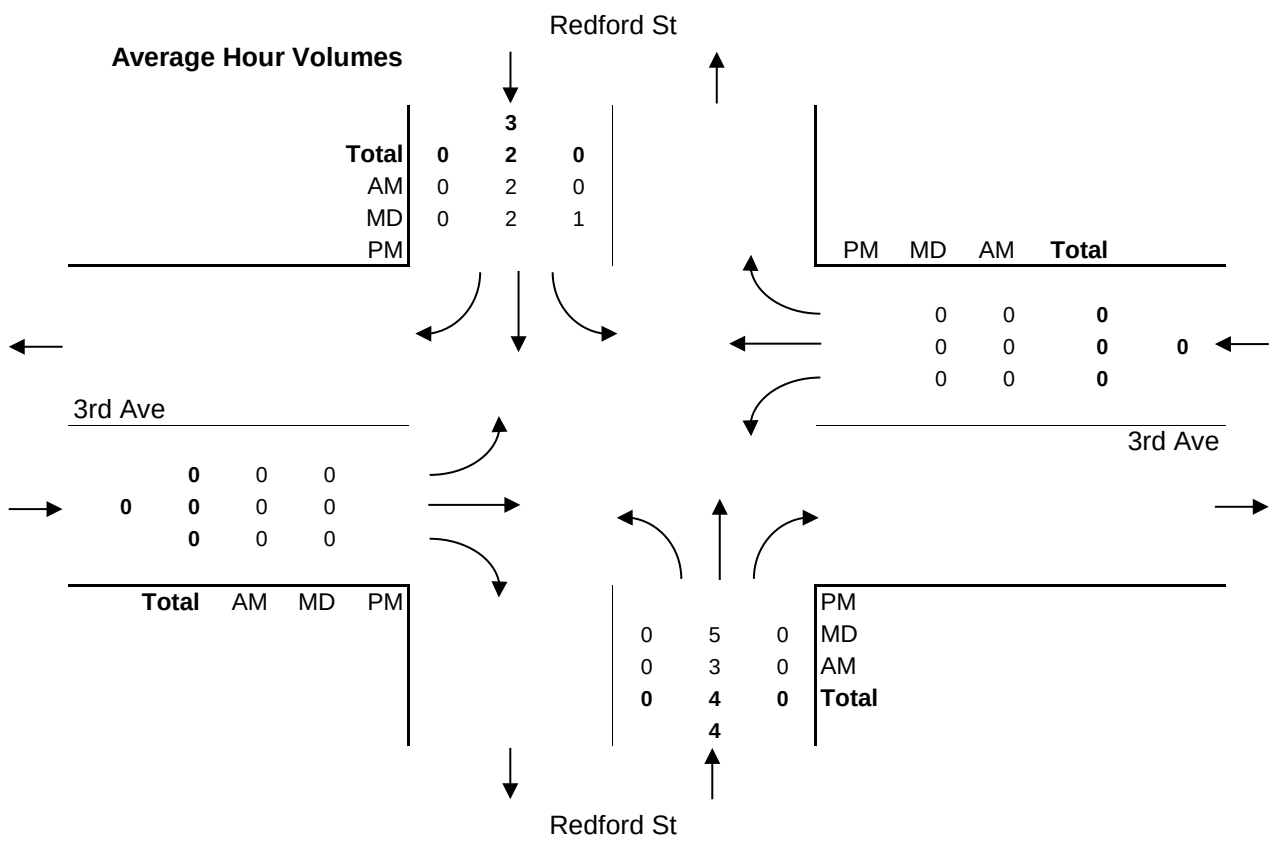

Vehicle Turning Movement Survey
With Classification

Major Route: 3rd Avenue
Minor Route: Redford Street
Municipality: Port Alberni
Filename: 1-3rd Ave @ Redford St-Sep 27, 2017.xlsx
Location #: 1

Date: September 27, 2017
Day-of-week: Wednesday

East/West Route: 3rd Avenue
Intersection Type: 4-leg
Signalized?: Yes
Weather: Clear and dry

Vehicle Classifications: Regular Vehicles
Buses
Articulated Trucks
Cube Trucks
Dump Trucks
Emergency Trucks
Garbage Trucks
Logging Trucks
RVs
Utility Trucks

This data is for Emergency Trucks

Shift	Start	End	Duration
AM	7:00	12:00	5.00
MD	12:00	15:00	3.00
PM			
Total	**7:00**		**8.00**

Notes: 24-hour clock used for reporting (15-minute increments)
North Approach - southbound vehicles approaching intersection from the north
15x4 - 15 min volume (from maximum 15 minute period of movement/approach in peak hour period [*]) x 4
Pedestrians - N indicates pedestrians crossing north approach (east/west)

Comments:

Survey Data
Emergency Trucks

3rd Avenue @ Redford Street
Wednesday, September 27, 2017

Time Period Begins	Redford St NORTH Approach				Redford St SOUTH Approach				3rd Ave WEST Approach				3rd Ave EAST Approach				Total Volume		Peak				
	Left	Thru	Right	Total	Left	Thru	Right	Total	Left	Thru	Right	Total	Left	Thru	Right	Total	15-min	Hour		N	S	W	E
7:00	0	0	0	**0**	0	0	0	**0**	0	0	0	**0**	0	0	0	**0**	**0**			0	0	0	0
7:15	0	0	0	**0**	0	0	0	**0**	0	0	0	**0**	0	0	0	**0**	**0**			0	0	0	0
7:30	0	0	0	**0**	0	0	0	**0**	0	0	0	**0**	0	0	0	**0**	**0**			0	0	0	0
7:45	0	0	0	**0**	0	0	0	**0**	0	0	0	**0**	0	0	0	**0**	**0**	0		0	0	0	0
8:00	0	0	0	**0**	0	0	0	**0**	0	0	0	**0**	0	0	0	**0**	**0**	0		0	0	0	0
8:15	0	0	0	**0**	0	0	0	**0**	0	0	0	**0**	0	0	0	**0**	**0**	0		0	0	0	0
8:30	0	0	0	**0**	0	0	0	**0**	0	0	0	**0**	0	0	0	**0**	**0**	0		0	0	0	0
8:45	0	0	0	**0**	0	0	0	**0**	0	0	0	**0**	0	0	0	**0**	**0**	0		0	0	0	0
9:00	0	0	0	**0**	0	0	0	**0**	0	0	0	**0**	0	0	0	**0**	**0**	0		0	0	0	0
9:15	0	0	0	**0**	0	0	0	**0**	0	0	0	**0**	0	0	0	**0**	**0**	0		0	0	0	0
9:30	0	0	0	**0**	0	0	0	**0**	0	0	0	**0**	0	0	0	**0**	**0**	0		0	0	0	0
9:45	0	0	0	**0**	0	0	0	**0**	0	0	0	**0**	0	0	0	**0**	**0**	0		0	0	0	0
10:00	0	0	0	**0**	0	0	0	**0**	0	0	0	**0**	0	0	0	**0**	**0**	0		0	0	0	0
10:15	0	0	0	**0**	0	0	0	**0**	0	0	0	**0**	0	0	0	**0**	**0**	0		0	0	0	0
10:30	0	0	0	**0**	0	0	0	**0**	0	0	0	**0**	0	0	0	**0**	**0**	0		0	0	0	0
10:45	0	0	0	**0**	0	0	0	**0**	0	0	0	**0**	0	0	1	**1**	**1**	1		0	0	0	0
11:00	0	0	0	**0**	0	0	0	**0**	0	0	0	**0**	0	0	0	**0**	**0**	1	*	0	0	0	0
11:15	0	0	0	**0**	0	0	0	**0**	0	0	0	**0**	0	0	0	**0**	**0**	1	*	0	0	0	0
11:30	0	1	0	**1**	0	0	0	**0**	0	0	0	**0**	0	0	0	**0**	**1**	2	*	0	0	0	0
11:45	0	0	0	**0**	0	0	0	**0**	0	0	0	**0**	0	0	0	**0**	**0**	1	+	0	0	0	0
Total	0	1	0	**1**	0	0	0	**0**	0	0	0	**0**	0	0	1	**1**	**2**			0	0	0	0
12:00	0	0	0	**0**	0	0	0	**0**	0	0	0	**0**	0	0	0	**0**	**0**			0	0	0	0
12:15	0	0	0	**0**	0	0	0	**0**	0	0	0	**0**	0	0	0	**0**	**0**			0	0	0	0
12:30	0	0	0	**0**	0	0	0	**0**	0	0	0	**0**	0	0	0	**0**	**0**			0	0	0	0
12:45	0	0	0	**0**	0	0	0	**0**	0	0	0	**0**	0	0	0	**0**	**0**	0	+	0	0	0	0
13:00	0	0	0	**0**	0	0	0	**0**	0	0	0	**0**	0	0	0	**0**	**0**	0	*	0	0	0	0
13:15	0	0	0	**0**	0	0	0	**0**	0	0	0	**0**	0	0	0	**0**	**0**	0	*	0	0	0	0
13:30	0	0	0	**0**	0	0	0	**0**	0	0	0	**0**	0	0	0	**0**	**0**	0	*	0	0	0	0
13:45	0	0	0	**0**	0	0	0	**0**	0	0	0	**0**	0	0	0	**0**	**0**	0		0	0	0	0
14:00	0	0	0	**0**	0	0	0	**0**	0	0	0	**0**	0	0	0	**0**	**0**	0		0	0	0	0
14:15	0	0	0	**0**	0	0	0	**0**	0	0	0	**0**	0	0	0	**0**	**0**	0		0	0	0	0
14:30	0	0	0	**0**	0	0	1	**1**	0	0	0	**0**	0	0	0	**0**	**1**	1		0	0	0	0
14:45	0	0	0	**0**	0	0	0	**0**	0	0	0	**0**	0	0	0	**0**	**0**	1		0	0	0	0
n/a																							
n/a																							
n/a																							
n/a																							
Total	0	0	0	**0**	0	0	1	**1**	0	0	0	**0**	0	0	0	**0**	**1**			0	0	0	0
n/a																							
n/a																							
n/a																							
n/a																							
n/a																							
n/a																							
n/a																							
n/a																							
n/a																							
n/a																							
n/a																							
n/a																							
n/a																							
n/a																							
n/a																							
n/a																							
n/a																							
n/a																							
Total																							

AM Peak Period
Emergency Trucks

3rd Avenue @ Redford Street
Wednesday, September 27, 2017

Time Period Begins	Redford St NORTH Approach				Redford St SOUTH Approach				3rd Ave WEST Approach				3rd Ave EAST Approach				Total Volume		Peak					Conflict	
	Left	Thru	Right	Total	Left	Thru	Right	Total	Left	Thru	Right	Total	Left	Thru	Right	Total	15-min	Hour		N	S	W	E	15 min	Hr
7:00	0	0	0	0	0	0	0	0	0	0	0	0	0	0	0	0	0			0	0	0	0	0	
7:15	0	0	0	0	0	0	0	0	0	0	0	0	0	0	0	0	0			0	0	0	0	0	
7:30	0	0	0	0	0	0	0	0	0	0	0	0	0	0	0	0	0			0	0	0	0	0	
7:45	0	0	0	0	0	0	0	0	0	0	0	0	0	0	0	0	0	0		0	0	0	0	0	0
8:00	0	0	0	0	0	0	0	0	0	0	0	0	0	0	0	0	0	0		0	0	0	0	0	0
8:15	0	0	0	0	0	0	0	0	0	0	0	0	0	0	0	0	0	0		0	0	0	0	0	0
8:30	0	0	0	0	0	0	0	0	0	0	0	0	0	0	0	0	0	0		0	0	0	0	0	0
8:45	0	0	0	0	0	0	0	0	0	0	0	0	0	0	0	0	0	0		0	0	0	0	0	0
9:00	0	0	0	0	0	0	0	0	0	0	0	0	0	0	0	0	0	0		0	0	0	0	0	0
9:15	0	0	0	0	0	0	0	0	0	0	0	0	0	0	0	0	0	0		0	0	0	0	0	0
9:30	0	0	0	0	0	0	0	0	0	0	0	0	0	0	0	0	0	0		0	0	0	0	0	0
9:45	0	0	0	0	0	0	0	0	0	0	0	0	0	0	0	0	0	0		0	0	0	0	0	0
10:00	0	0	0	0	0	0	0	0	0	0	0	0	0	0	0	0	0	0		0	0	0	0	0	0
10:15	0	0	0	0	0	0	0	0	0	0	0	0	0	0	0	0	0	0		0	0	0	0	0	0
10:30	0	0	0	0	0	0	0	0	0	0	0	0	0	0	0	0	0	0		0	0	0	0	0	0
10:45	0	0	0	0	0	0	0	0	0	0	0	0	0	0	1	1	1	1		0	0	0	0	1	1
11:00	0	0	0	0	0	0	0	0	0	0	0	0	0	0	0	0	0	1	*	0	0	0	0	0	1
11:15	0	0	0	0	0	0	0	0	0	0	0	0	0	0	0	0	0	1	*	0	0	0	0	0	1
11:30	0	1	0	1	0	0	0	0	0	0	0	0	0	0	0	0	1	2	*	0	0	0	0	1	2
11:45	0	0	0	0	0	0	0	0	0	0	0	0	0	0	0	0	0	1	+	0	0	0	0	0	1
Total	0	1	0	**1**	0	0	0	**0**	0	0	0	**0**	0	0	1	**1**	2			0	0	0	0		2
Avg Hr	0	0	0	**0**	0	0	0	**0**	0	0	0	**0**	0	0	0	**0**	0			0	0	0	0		

Peak hour of the intersection

Pk Hr	0	1	0	1	0	0	0	0	0	0	0	0	0	0	0	0	1	*		0	0	0	0		1
15x4	0	4	0	4	0	0	0	0	0	0	0	0	0	0	0	0	4	+		0	0	0	0		4
PHF	n/a	0.25	n/a	**0.25**	n/a	n/a	n/a	**n/a**	n/a	n/a	n/a	**n/a**	n/a	n/a	n/a	**n/a**	0.25			n/a	n/a	n/a	n/a		0.25

Peak hour of conflicting volumes for the intersection

Pk Hr	0	1	0	1	0	0	0	0	0	0	0	0	0	0	0	0	1	*		0	0	0	0		1
15x4	0	4	0	4	0	0	0	0	0	0	0	0	0	0	0	0	4	+		0	0	0	0		4
PHF	n/a	0.25	n/a	**0.25**	n/a	n/a	n/a	**n/a**	n/a	n/a	n/a	**n/a**	n/a	n/a	n/a	**n/a**	0.25			n/a	n/a	n/a	n/a		0.25

** Calculated peak hour occurs during the first or last hour of shift and therefore may be invalid. **

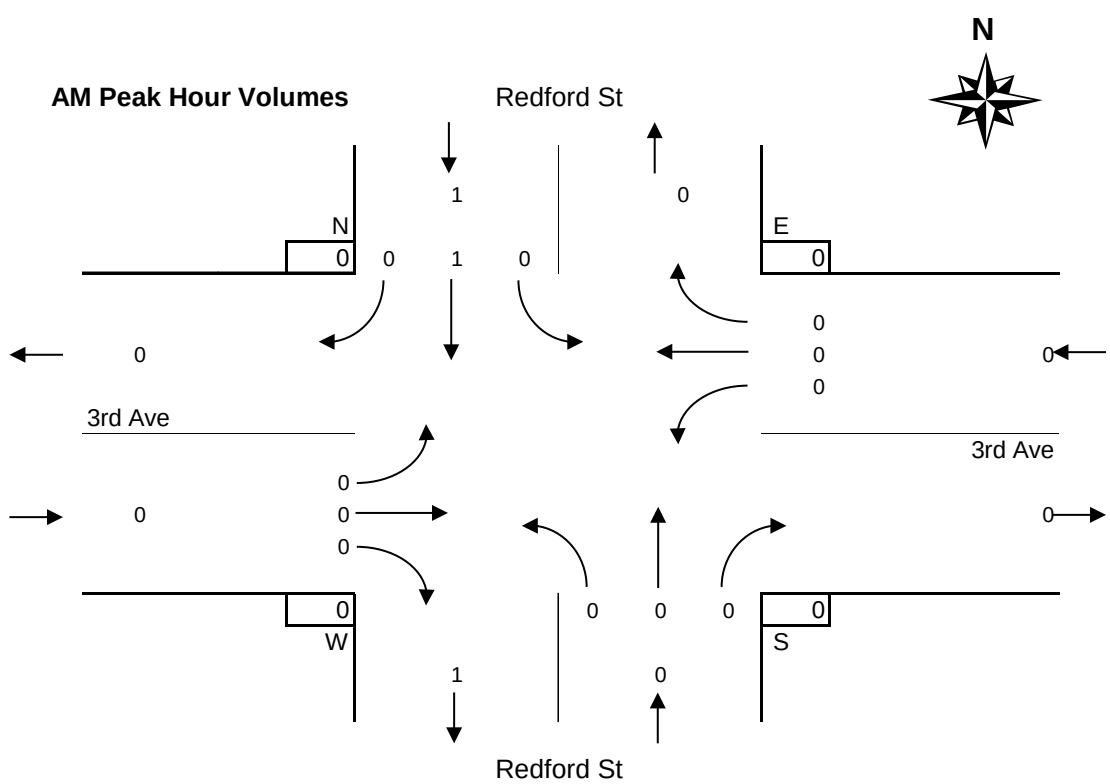

MD Peak Period
Emergency Trucks

3rd Avenue @ Redford Street
Wednesday, September 27, 2017

Time Period Begins	Redford St NORTH Approach				Redford St SOUTH Approach				3rd Ave WEST Approach				3rd Ave EAST Approach				Total Volume		Peak					Conflict	
	Left	Thru	Right	Total	Left	Thru	Right	Total	Left	Thru	Right	Total	Left	Thru	Right	Total	15-min	Hour		N	S	W	E	15 min	Hr
12:00	0	0	0	0	0	0	0	0	0	0	0	0	0	0	0	0	0			0	0	0	0	0	
12:15	0	0	0	0	0	0	0	0	0	0	0	0	0	0	0	0	0			0	0	0	0	0	
12:30	0	0	0	0	0	0	0	0	0	0	0	0	0	0	0	0	0			0	0	0	0	0	
12:45	0	0	0	0	0	0	0	0	0	0	0	0	0	0	0	0	0	0	+	0	0	0	0	0	0
13:00	0	0	0	0	0	0	0	0	0	0	0	0	0	0	0	0	0	0	*	0	0	0	0	0	0
13:15	0	0	0	0	0	0	0	0	0	0	0	0	0	0	0	0	0	0	*	0	0	0	0	0	0
13:30	0	0	0	0	0	0	0	0	0	0	0	0	0	0	0	0	0	0	*	0	0	0	0	0	0
13:45	0	0	0	0	0	0	0	0	0	0	0	0	0	0	0	0	0	0		0	0	0	0	0	0
14:00	0	0	0	0	0	0	0	0	0	0	0	0	0	0	0	0	0	0		0	0	0	0	0	0
14:15	0	0	0	0	0	0	0	0	0	0	0	0	0	0	0	0	0	0		0	0	0	0	0	0
14:30	0	0	0	0	0	0	1	1	0	0	0	0	0	0	0	0	1	1		0	0	0	0	1	1
14:45	0	0	0	0	0	0	0	0	0	0	0	0	0	0	0	0	0	1		0	0	0	0	0	1
n/a																									
n/a																									
n/a																									
n/a																									
Total	0	0	0	**0**	0	0	1	**1**	0	0	0	**0**	0	0	0	**0**	1			0	0	0	0		1
Avg Hr	0	0	0	**0**	0	0	0	**0**	0	0	0	**0**	0	0	0	**0**	0			0	0	0	0		

Peak hour of the intersection

Pk Hr	0	0	0	0	0	0	0	0	0	0	0	0	0	0	0	0	0	*		0	0	0	0		0
15x4	0	0	0	0	0	0	0	0	0	0	0	0	0	0	0	0	0	+		0	0	0	0		0
PHF	n/a	n/a	n/a	**n/a**	n/a	n/a	n/a	**n/a**	n/a	n/a	n/a	**n/a**	n/a	n/a	n/a	**n/a**	n/a			n/a	n/a	n/a	n/a		n/a

Peak hour of conflicting volumes for the intersection

Pk Hr	0	0	0	0	0	0	1	1	0	0	0	0	0	0	0	0	1	*		0	0	0	0		1
15x4	0	0	0	0	0	0	4	4	0	0	0	0	0	0	0	0	4	+		0	0	0	0		4
PHF	n/a	n/a	n/a	**n/a**	n/a	n/a	0.25	**0.25**	n/a	n/a	n/a	**n/a**	n/a	n/a	n/a	**n/a**	0.25			n/a	n/a	n/a	n/a		0.25

MD Peak Hour Volumes

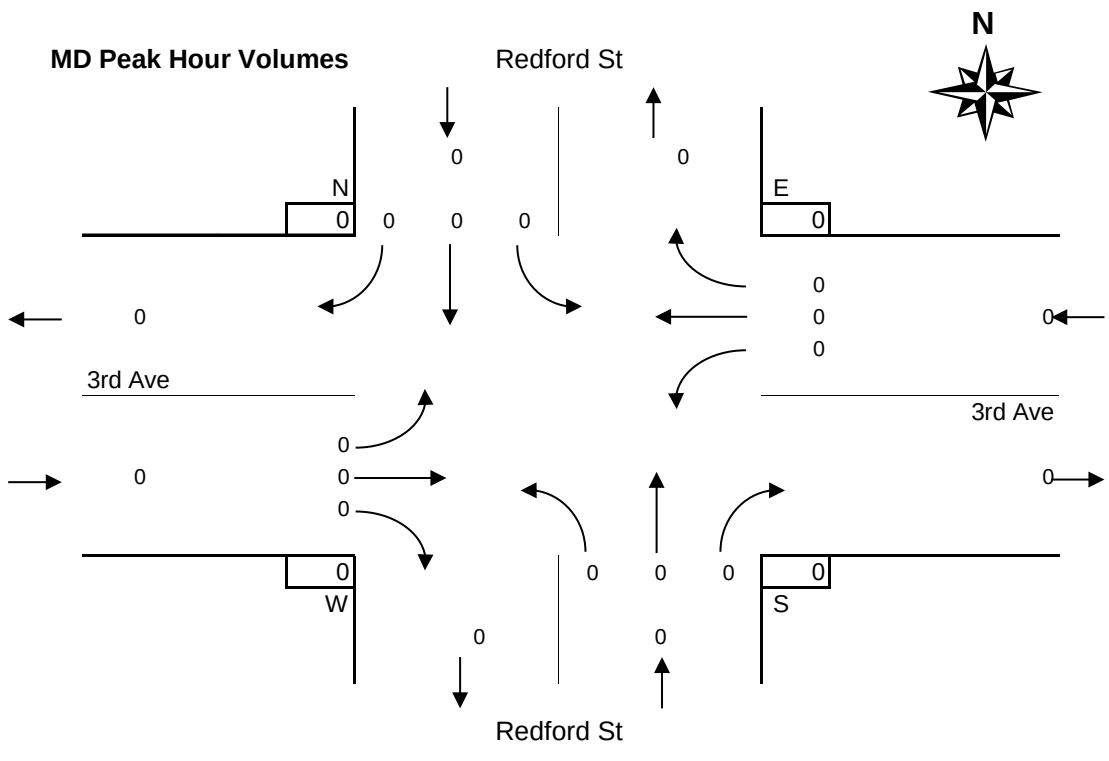

PM Peak Period
Emergency Trucks

3rd Avenue @ Redford Street
Wednesday, September 27, 2017

Time Period Begins	Redford St NORTH Approach				Redford St SOUTH Approach				3rd Ave WEST Approach				3rd Ave EAST Approach				Total Volume		Peak					Conflict	
	Left	Thru	Right	Total	Left	Thru	Right	Total	Left	Thru	Right	Total	Left	Thru	Right	Total	15-min	Hour		N	S	W	E	15 min	Hr
n/a																									
n/a																									
n/a																									
n/a																									
n/a																									
n/a																									
n/a																									
n/a																									
n/a																									
n/a																									
n/a																									
n/a																									
n/a																									
n/a																									
n/a																									
n/a																									
n/a																									
n/a																									
n/a																									
n/a																									

Total																									0
Avg Hr																									

Peak hour of the intersection

Pk Hr																		*							0
15x4																		+							0
PHF																									n/a

Peak hour of conflicting volumes for the intersection

Pk Hr																		*							0
15x4																		+							0
PHF																									n/a

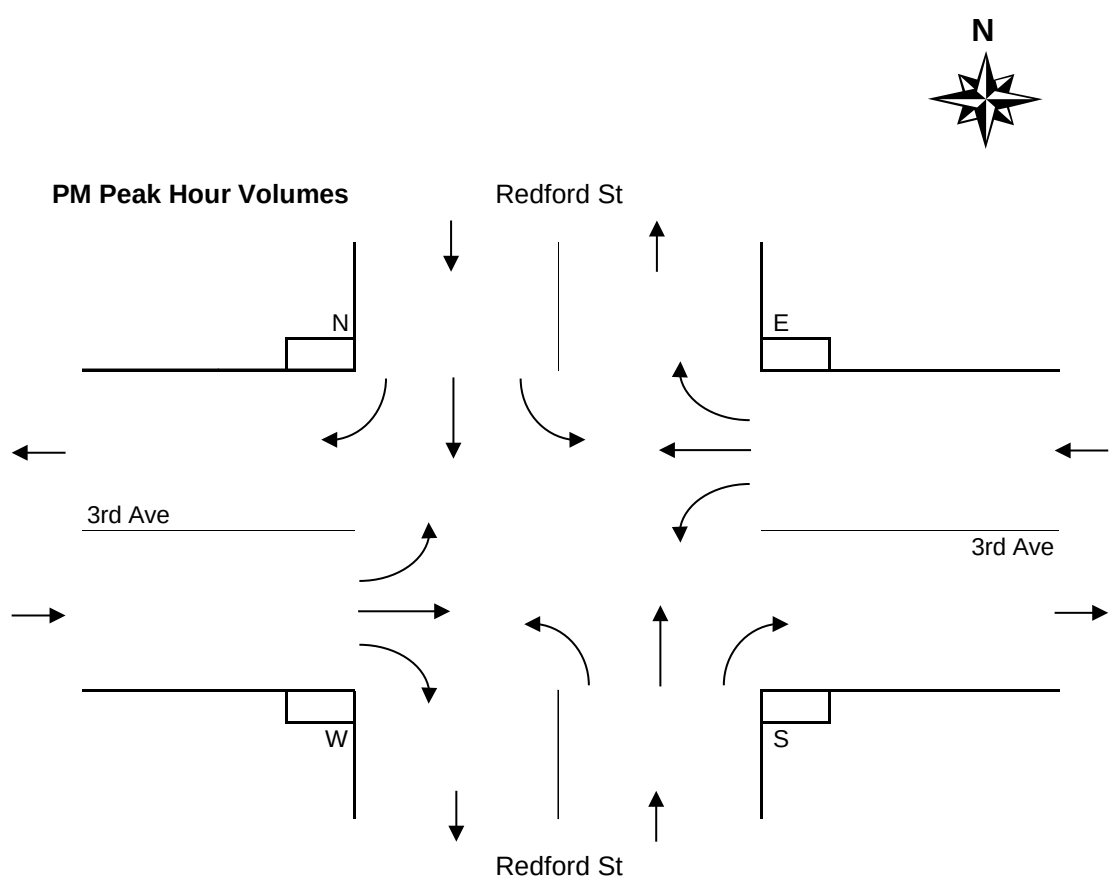

Period Hourly Averages
Emergency Trucks

3rd Avenue @ Redford Street
Wednesday, September 27, 2017

Entire Survey Period

8 Hours

	Redford St				Redford St				3rd Ave				3rd Ave							
	NORTH Approach				SOUTH Approach				WEST Approach				EAST Approach				Total			
	Left	Thru	Right	Total	Left	Thru	Right	Total	Left	Thru	Right	Total	Left	Thru	Right	Total	Volume	N	S	W	E
Total	0	1	0	**1**	0	0	1	**1**	0	0	0	**0**	0	0	1	**1**	3	0	0	0	0
Avg Hr	0	0	0	**0**	0	0	0	**0**	0	0	0	**0**	0	0	0	**0**	0	0	0	0	0

AM Peak Period

5 Hours

	Redford St				Redford St				3rd Ave				3rd Ave							
	NORTH Approach				SOUTH Approach				WEST Approach				EAST Approach				Total			
Totals	Left	Thru	Right	Total	Left	Thru	Right	Total	Left	Thru	Right	Total	Left	Thru	Right	Total	Volume	N	S	W	E
Period	0	1	0	**1**	0	0	0	**0**	0	0	0	**0**	0	0	1	**1**	2	0	0	0	0
Avg Hr	0	0	0	**0**	0	0	0	**0**	0	0	0	**0**	0	0	0	**0**	0	0	0	0	0

MD Peak Period

3 Hours

	Redford St				Redford St				3rd Ave				3rd Ave							
	NORTH Approach				SOUTH Approach				WEST Approach				EAST Approach				Total			
Totals	Left	Thru	Right	Total	Left	Thru	Right	Total	Left	Thru	Right	Total	Left	Thru	Right	Total	Volume	N	S	W	E
Total	0	0	0	**0**	0	0	1	**1**	0	0	0	**0**	0	0	0	**0**	1	0	0	0	0
Avg Hr	0	0	0	**0**	0	0	0	**0**	0	0	0	**0**	0	0	0	**0**	0	0	0	0	0

PM Peak Period

Hours

	Redford St				Redford St				3rd Ave				3rd Ave							
	NORTH Approach				SOUTH Approach				WEST Approach				EAST Approach				Total			
Totals	Left	Thru	Right	Total	Left	Thru	Right	Total	Left	Thru	Right	Total	Left	Thru	Right	Total	Volume	N	S	W	E
Total																				
Avg Hr																				

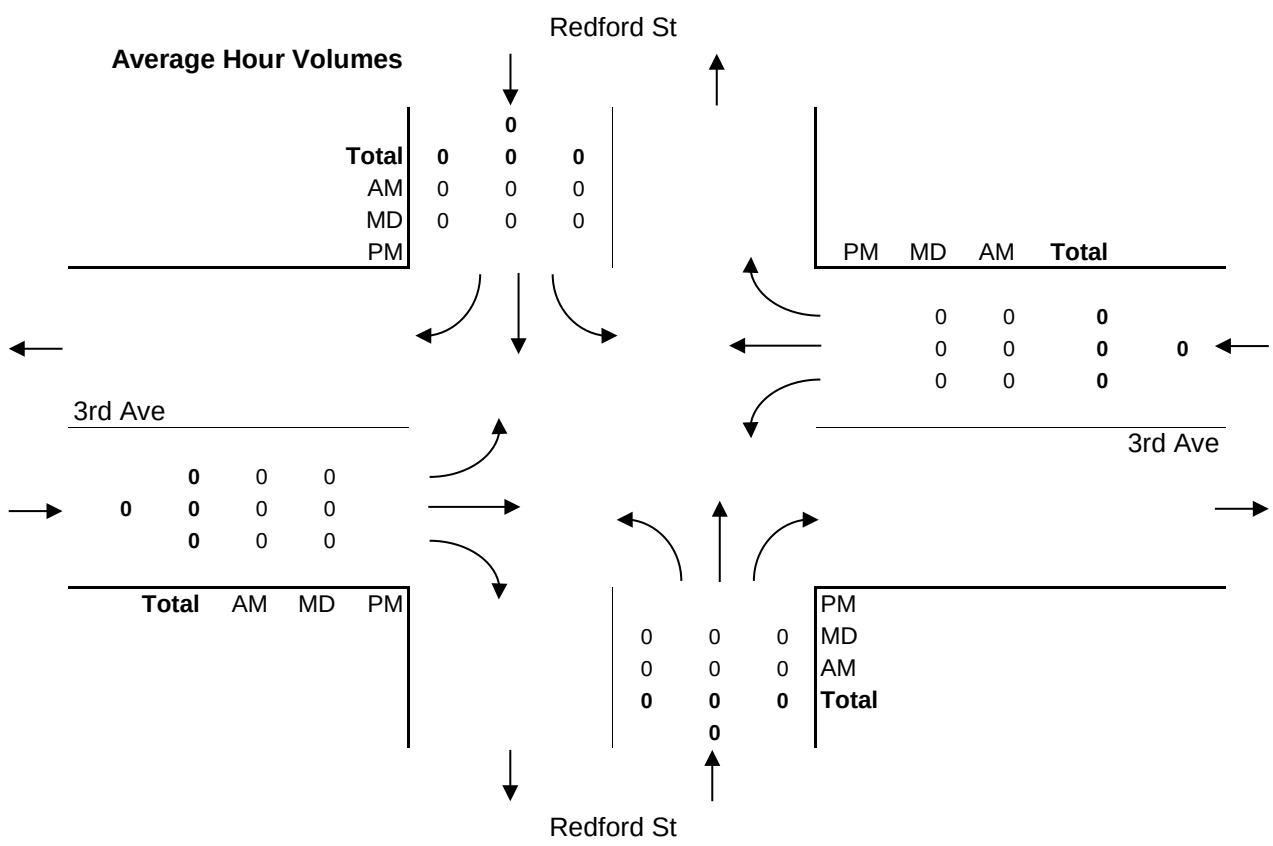

Major Route: 3rd Avenue
Minor Route: Redford Street
Municipality: Port Alberni
Filename: 1-3rd Ave @ Redford St-Sep 27, 2017.xlsx
Location #: 1

Date: September 27, 2017
Day-of-week: Wednesday

East/West Route: 3rd Avenue
Intersection Type: 4-leg
Signalized?: Yes
Weather: Clear and dry

Vehicle Classifications: Regular Vehicles
Buses
Articulated Trucks
Cube Trucks
Dump Trucks
Emergency Trucks
Garbage Trucks
Logging Trucks
RVs
Utility Trucks

This data is for Garbage Trucks

Shift	Start	End	Duration
AM	7:00	12:00	5.00
MD	12:00	15:00	3.00
PM			
Total	**7:00**		**8.00**

Notes: 24-hour clock used for reporting (15-minute increments)
North Approach - southbound vehicles approaching intersection from the north
15x4 - 15 min volume (from maximum 15 minute period of movement/approach in peak hour period [*]) x 4
Pedestrians - N indicates pedestrians crossing north approach (east/west)

Comments:

Survey Data
Garbage Trucks

3rd Avenue @ Redford Street
Wednesday, September 27, 2017

Time Period Begins	Redford St NORTH Approach				Redford St SOUTH Approach				3rd Ave WEST Approach				3rd Ave EAST Approach				Total Volume		Peak				
	Left	Thru	Right	Total	Left	Thru	Right	Total	Left	Thru	Right	Total	Left	Thru	Right	Total	15-min	Hour		N	S	W	E
7:00	0	0	0	**0**	0	0	0	**0**	0	0	0	**0**	0	0	0	**0**	**0**			0	0	0	0
7:15	0	0	0	**0**	0	0	0	**0**	0	0	0	**0**	1	0	0	**1**	**1**			0	0	0	0
7:30	0	0	0	**0**	0	0	0	**0**	0	0	0	**0**	0	0	0	**0**	**0**			0	0	0	0
7:45	0	0	0	**0**	0	0	0	**0**	0	0	0	**0**	0	0	0	**0**	**0**	1		0	0	0	0
8:00	0	0	0	**0**	0	0	0	**0**	0	0	0	**0**	0	0	0	**0**	**0**	1		0	0	0	0
8:15	0	0	0	**0**	0	0	0	**0**	0	0	0	**0**	0	0	0	**0**	**0**	0		0	0	0	0
8:30	0	0	0	**0**	0	1	0	**1**	0	0	0	**0**	0	0	0	**0**	**1**	1		0	0	0	0
8:45	0	0	0	**0**	0	0	0	**0**	0	0	0	**0**	0	0	0	**0**	**0**	1		0	0	0	0
9:00	0	0	0	**0**	0	0	0	**0**	0	0	0	**0**	0	0	0	**0**	**0**	1		0	0	0	0
9:15	0	0	0	**0**	0	0	0	**0**	0	0	0	**0**	0	0	0	**0**	**0**	1		0	0	0	0
9:30	0	0	0	**0**	0	0	0	**0**	0	0	0	**0**	0	0	0	**0**	**0**	0		0	0	0	0
9:45	0	0	0	**0**	0	0	0	**0**	0	0	0	**0**	0	0	0	**0**	**0**	0		0	0	0	0
10:00	0	0	0	**0**	0	0	0	**0**	0	0	0	**0**	0	0	0	**0**	**0**	0		0	0	0	0
10:15	0	0	0	**0**	0	0	0	**0**	0	0	0	**0**	0	0	0	**0**	**0**	0		0	0	0	0
10:30	0	0	0	**0**	0	0	0	**0**	0	0	0	**0**	0	0	0	**0**	**0**	0		0	0	0	0
10:45	0	0	0	**0**	0	0	0	**0**	0	0	0	**0**	0	0	0	**0**	**0**	0		0	0	0	0
11:00	0	0	0	**0**	0	0	0	**0**	0	0	0	**0**	0	0	0	**0**	**0**	0	*	0	0	0	0
11:15	0	0	0	**0**	0	0	0	**0**	0	0	0	**0**	0	0	0	**0**	**0**	0	*	0	0	0	0
11:30	0	0	0	**0**	0	0	0	**0**	0	0	0	**0**	0	0	0	**0**	**0**	0	*	0	0	0	0
11:45	1	0	0	**1**	0	0	0	**0**	0	0	0	**0**	0	0	0	**0**	**1**	1	+	0	0	0	0
Total	1	0	0	**1**	0	1	0	**1**	0	0	0	**0**	1	0	0	**1**	**3**			0	0	0	0
12:00	0	0	0	**0**	0	0	0	**0**	0	0	0	**0**	0	0	0	**0**	**0**			0	0	0	0
12:15	0	0	0	**0**	0	0	0	**0**	0	0	0	**0**	0	0	0	**0**	**0**			0	0	0	0
12:30	0	0	0	**0**	0	0	0	**0**	0	0	0	**0**	0	0	0	**0**	**0**			0	0	0	0
12:45	0	0	0	**0**	0	0	0	**0**	0	0	0	**0**	0	0	0	**0**	**0**	0	+	0	0	0	0
13:00	0	0	0	**0**	0	0	0	**0**	0	0	0	**0**	0	0	0	**0**	**0**	0	*	0	0	0	0
13:15	0	0	0	**0**	0	0	0	**0**	0	0	0	**0**	0	0	0	**0**	**0**	0	*	0	0	0	0
13:30	0	0	0	**0**	0	0	0	**0**	0	0	0	**0**	0	0	0	**0**	**0**	0	*	0	0	0	0
13:45	0	0	0	**0**	0	0	0	**0**	0	0	0	**0**	0	0	0	**0**	**0**	0		0	0	0	0
14:00	0	0	0	**0**	0	0	0	**0**	0	0	0	**0**	0	0	0	**0**	**0**	0		0	0	0	0
14:15	0	0	0	**0**	0	0	0	**0**	0	0	0	**0**	0	0	0	**0**	**0**	0		0	0	0	0
14:30	0	0	0	**0**	0	0	0	**0**	0	0	0	**0**	0	0	0	**0**	**0**	0		0	0	0	0
14:45	0	0	0	**0**	0	0	0	**0**	0	0	0	**0**	0	0	0	**0**	**0**	0		0	0	0	0
n/a																							
n/a																							
n/a																							
n/a																							
Total	0	0	0	**0**	0	0	0	**0**	0	0	0	**0**	0	0	0	**0**	**0**			0	0	0	0
n/a																							
n/a																							
n/a																							
n/a																							
n/a																							
n/a																							
n/a																							
n/a																							
n/a																							
n/a																							
n/a																							
n/a																							
n/a																							
n/a																							
n/a																							
n/a																							
n/a																							
n/a																							
Total																							

AM Peak Period
Garbage Trucks

3rd Avenue @ Redford Street
Wednesday, September 27, 2017

Time Period Begins	Redford St NORTH Approach				Redford St SOUTH Approach				3rd Ave WEST Approach				3rd Ave EAST Approach				Total Volume		Peak					Conflict	
	Left	Thru	Right	Total	Left	Thru	Right	Total	Left	Thru	Right	Total	Left	Thru	Right	Total	15-min	Hour		N	S	W	E	15 min	Hr
7:00	0	0	0	0	0	0	0	0	0	0	0	0	0	0	0	0	0			0	0	0	0	0	
7:15	0	0	0	0	0	0	0	0	0	0	0	0	1	0	0	1	1			0	0	0	0	1	
7:30	0	0	0	0	0	0	0	0	0	0	0	0	0	0	0	0	0			0	0	0	0	0	
7:45	0	0	0	0	0	0	0	0	0	0	0	0	0	0	0	0	0	1		0	0	0	0	0	1
8:00	0	0	0	0	0	0	0	0	0	0	0	0	0	0	0	0	0	1		0	0	0	0	0	1
8:15	0	0	0	0	0	0	0	0	0	0	0	0	0	0	0	0	0	0		0	0	0	0	0	0
8:30	0	0	0	0	0	1	0	1	0	0	0	0	0	0	0	0	1	1		0	0	0	0	1	1
8:45	0	0	0	0	0	0	0	0	0	0	0	0	0	0	0	0	0	1		0	0	0	0	0	1
9:00	0	0	0	0	0	0	0	0	0	0	0	0	0	0	0	0	0	1		0	0	0	0	0	1
9:15	0	0	0	0	0	0	0	0	0	0	0	0	0	0	0	0	0	1		0	0	0	0	0	1
9:30	0	0	0	0	0	0	0	0	0	0	0	0	0	0	0	0	0	0		0	0	0	0	0	0
9:45	0	0	0	0	0	0	0	0	0	0	0	0	0	0	0	0	0	0		0	0	0	0	0	0
10:00	0	0	0	0	0	0	0	0	0	0	0	0	0	0	0	0	0	0		0	0	0	0	0	0
10:15	0	0	0	0	0	0	0	0	0	0	0	0	0	0	0	0	0	0		0	0	0	0	0	0
10:30	0	0	0	0	0	0	0	0	0	0	0	0	0	0	0	0	0	0		0	0	0	0	0	0
10:45	0	0	0	0	0	0	0	0	0	0	0	0	0	0	0	0	0	0		0	0	0	0	0	0
11:00	0	0	0	0	0	0	0	0	0	0	0	0	0	0	0	0	0	0	*	0	0	0	0	0	0
11:15	0	0	0	0	0	0	0	0	0	0	0	0	0	0	0	0	0	0	*	0	0	0	0	0	0
11:30	0	0	0	0	0	0	0	0	0	0	0	0	0	0	0	0	0	0	*	0	0	0	0	0	0
11:45	1	0	0	1	0	0	0	0	0	0	0	0	0	0	0	0	1	1	+	0	0	0	0	1	1
Total	1	0	0	**1**	0	1	0	**1**	0	0	0	**0**	1	0	0	**1**	3			0	0	0	0		3
Avg Hr	0	0	0	**0**	0	0	0	**0**	0	0	0	**0**	0	0	0	**0**	1			0	0	0	0		

Peak hour of the intersection

Pk Hr	1	0	0	1	0	0	0	0	0	0	0	0	0	0	0	0	1	*		0	0	0	0		1
15x4	4	0	0	4	0	0	0	0	0	0	0	0	0	0	0	0	4	+		0	0	0	0		4
PHF	0.25	n/a	n/a	**0.25**	n/a	n/a	n/a	**n/a**	n/a	n/a	n/a	**n/a**	n/a	n/a	n/a	**n/a**	0.25			n/a	n/a	n/a	n/a		0.25

Peak hour of conflicting volumes for the intersection

Pk Hr	1	0	0	1	0	0	0	0	0	0	0	0	0	0	0	0	1	*		0	0	0	0		1
15x4	4	0	0	4	0	0	0	0	0	0	0	0	0	0	0	0	4	+		0	0	0	0		4
PHF	0.25	n/a	n/a	**0.25**	n/a	n/a	n/a	**n/a**	n/a	n/a	n/a	**n/a**	n/a	n/a	n/a	**n/a**	0.25			n/a	n/a	n/a	n/a		0.25

** Calculated peak hour occurs during the first or last hour of shift and therefore may be invalid. **

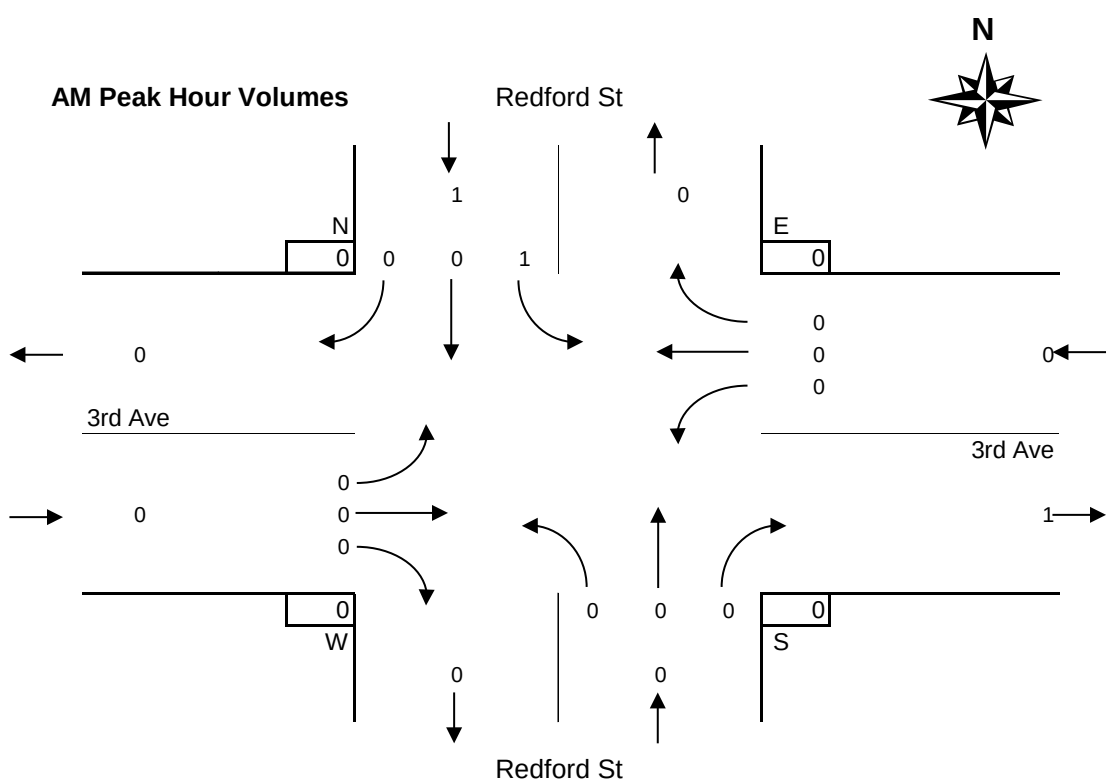

MD Peak Period
Garbage Trucks

3rd Avenue @ Redford Street
Wednesday, September 27, 2017

Time Period Begins	Redford St NORTH Approach				Redford St SOUTH Approach				3rd Ave WEST Approach				3rd Ave EAST Approach				Total Volume		Peak					Conflict	
	Left	Thru	Right	Total	Left	Thru	Right	Total	Left	Thru	Right	Total	Left	Thru	Right	Total	15-min	Hour		N	S	W	E	15 min	Hr
12:00	0	0	0	0	0	0	0	0	0	0	0	0	0	0	0	0	0			0	0	0	0	0	
12:15	0	0	0	0	0	0	0	0	0	0	0	0	0	0	0	0	0			0	0	0	0	0	
12:30	0	0	0	0	0	0	0	0	0	0	0	0	0	0	0	0	0			0	0	0	0	0	
12:45	0	0	0	0	0	0	0	0	0	0	0	0	0	0	0	0	0	0	+	0	0	0	0	0	0
13:00	0	0	0	0	0	0	0	0	0	0	0	0	0	0	0	0	0	0	*	0	0	0	0	0	0
13:15	0	0	0	0	0	0	0	0	0	0	0	0	0	0	0	0	0	0	*	0	0	0	0	0	0
13:30	0	0	0	0	0	0	0	0	0	0	0	0	0	0	0	0	0	0	*	0	0	0	0	0	0
13:45	0	0	0	0	0	0	0	0	0	0	0	0	0	0	0	0	0	0		0	0	0	0	0	0
14:00	0	0	0	0	0	0	0	0	0	0	0	0	0	0	0	0	0	0		0	0	0	0	0	0
14:15	0	0	0	0	0	0	0	0	0	0	0	0	0	0	0	0	0	0		0	0	0	0	0	0
14:30	0	0	0	0	0	0	0	0	0	0	0	0	0	0	0	0	0	0		0	0	0	0	0	0
14:45	0	0	0	0	0	0	0	0	0	0	0	0	0	0	0	0	0	0		0	0	0	0	0	0
n/a																									
n/a																									
n/a																									
n/a																									
Total	0	0	0	**0**	0	0	0	**0**	0	0	0	**0**	0	0	0	**0**	0			0	0	0	0		0
Avg Hr	0	0	0	**0**	0	0	0	**0**	0	0	0	**0**	0	0	0	**0**	0			0	0	0	0		

Peak hour of the intersection

Pk Hr	0	0	0	0	0	0	0	0	0	0	0	0	0	0	0	0	0	*		0	0	0	0		0
15x4	0	0	0	0	0	0	0	0	0	0	0	0	0	0	0	0	0	+		0	0	0	0		0
PHF	n/a	n/a	n/a	**n/a**	n/a	n/a	n/a	**n/a**	n/a	n/a	n/a	**n/a**	n/a	n/a	n/a	**n/a**	n/a			n/a	n/a	n/a	n/a		n/a

Peak hour of conflicting volumes for the intersection

Pk Hr	0	0	0	0	0	0	0	0	0	0	0	0	0	0	0	0	0	*		0	0	0	0		0
15x4	0	0	0	0	0	0	0	0	0	0	0	0	0	0	0	0	0	+		0	0	0	0		0
PHF	n/a	n/a	n/a	**n/a**	n/a	n/a	n/a	**n/a**	n/a	n/a	n/a	**n/a**	n/a	n/a	n/a	**n/a**	n/a			n/a	n/a	n/a	n/a		n/a

MD Peak Hour Volumes

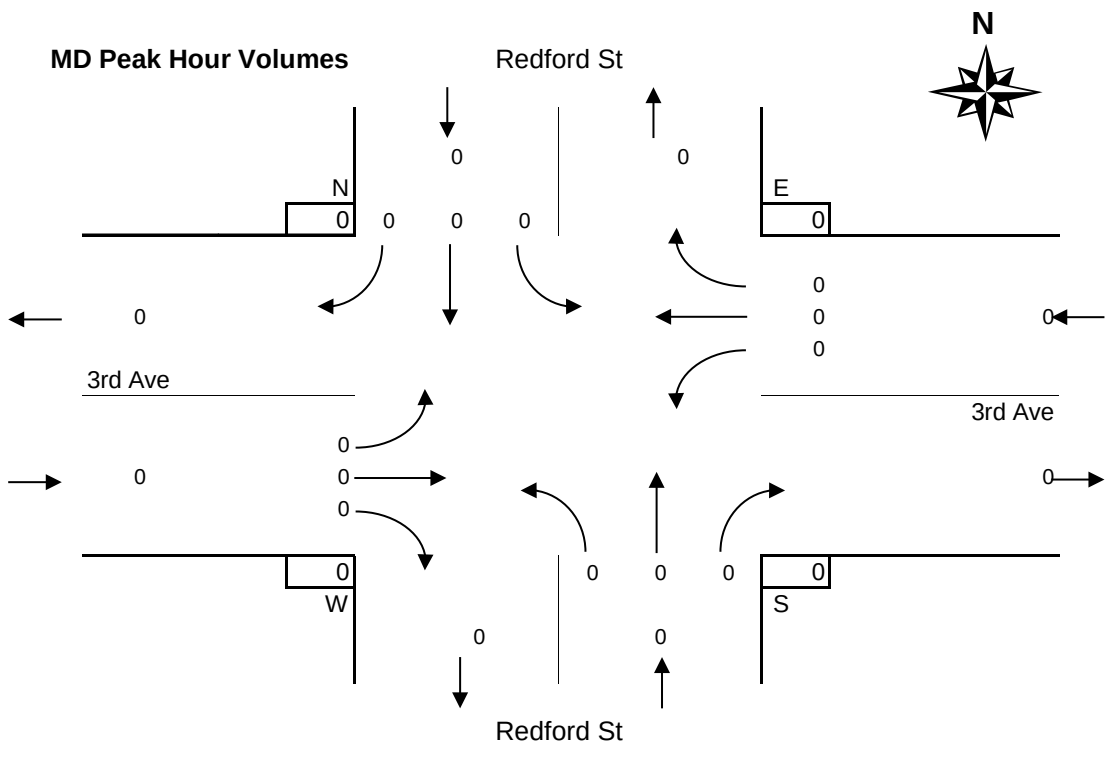

PM Peak Period
Garbage Trucks

3rd Avenue @ Redford Street
Wednesday, September 27, 2017

Time Period Begins	Redford St NORTH Approach				Redford St SOUTH Approach				3rd Ave WEST Approach				3rd Ave EAST Approach				Total Volume		Peak					Conflict	
	Left	Thru	Right	Total	Left	Thru	Right	Total	Left	Thru	Right	Total	Left	Thru	Right	Total	15-min	Hour		N	S	W	E	15 min	Hr
n/a																									
n/a																									
n/a																									
n/a																									
n/a																									
n/a																									
n/a																									
n/a																									
n/a																									
n/a																									
n/a																									
n/a																									
n/a																									
n/a																									
n/a																									
n/a																									
n/a																									
n/a																									
n/a																									
Total																									0
Avg Hr																									

Peak hour of the intersection

Pk Hr																		*							0
15x4																		+							0
PHF																									n/a

Peak hour of conflicting volumes for the intersection

Pk Hr																		*							0
15x4																		+							0
PHF																									n/a

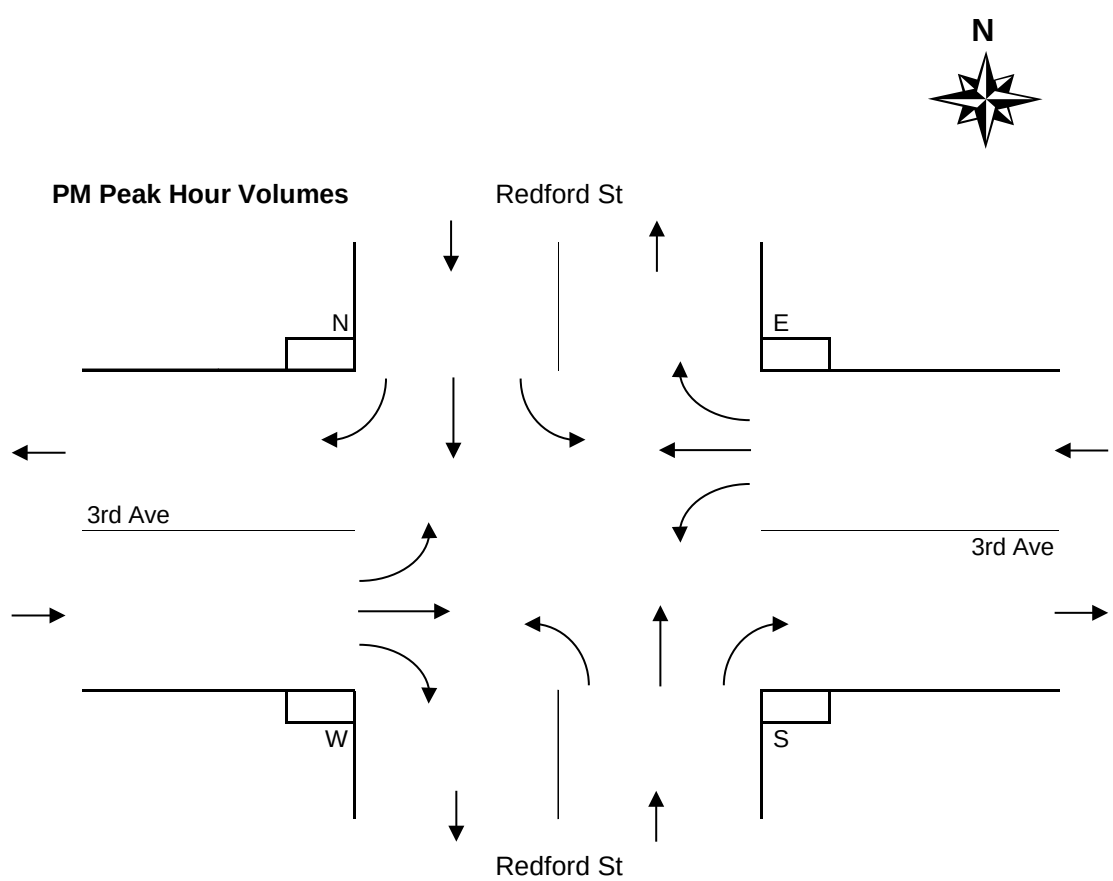

Period Hourly Averages
Garbage Trucks

3rd Avenue @ Redford Street
Wednesday, September 27, 2017

Entire Survey Period

8 Hours

	Redford St				Redford St				3rd Ave				3rd Ave							
	NORTH Approach				SOUTH Approach				WEST Approach				EAST Approach				Total			
	Left	Thru	Right	Total	Left	Thru	Right	Total	Left	Thru	Right	Total	Left	Thru	Right	Total	Volume	N	S	W	E
Total	1	0	0	**1**	0	1	0	**1**	0	0	0	**0**	1	0	0	**1**	3	0	0	0	0
Avg Hr	0	0	0	**0**	0	0	0	**0**	0	0	0	**0**	0	0	0	**0**	0	0	0	0	0

AM Peak Period

5 Hours

	Redford St				Redford St				3rd Ave				3rd Ave							
	NORTH Approach				SOUTH Approach				WEST Approach				EAST Approach				Total			
Totals	Left	Thru	Right	Total	Left	Thru	Right	Total	Left	Thru	Right	Total	Left	Thru	Right	Total	Volume	N	S	W	E
Period	1	0	0	**1**	0	1	0	**1**	0	0	0	**0**	1	0	0	**1**	3	0	0	0	0
Avg Hr	0	0	0	**0**	0	0	0	**0**	0	0	0	**0**	0	0	0	**0**	1	0	0	0	0

MD Peak Period

3 Hours

	Redford St				Redford St				3rd Ave				3rd Ave							
	NORTH Approach				SOUTH Approach				WEST Approach				EAST Approach				Total			
Totals	Left	Thru	Right	Total	Left	Thru	Right	Total	Left	Thru	Right	Total	Left	Thru	Right	Total	Volume	N	S	W	E
Total	0	0	0	**0**	0	0	0	**0**	0	0	0	**0**	0	0	0	**0**	0	0	0	0	0
Avg Hr	0	0	0	**0**	0	0	0	**0**	0	0	0	**0**	0	0	0	**0**	0	0	0	0	0

PM Peak Period

Hours

	Redford St				Redford St				3rd Ave				3rd Ave							
	NORTH Approach				SOUTH Approach				WEST Approach				EAST Approach				Total			
Totals	Left	Thru	Right	Total	Left	Thru	Right	Total	Left	Thru	Right	Total	Left	Thru	Right	Total	Volume	N	S	W	E
Total																				
Avg Hr																				

Average Hour Volumes

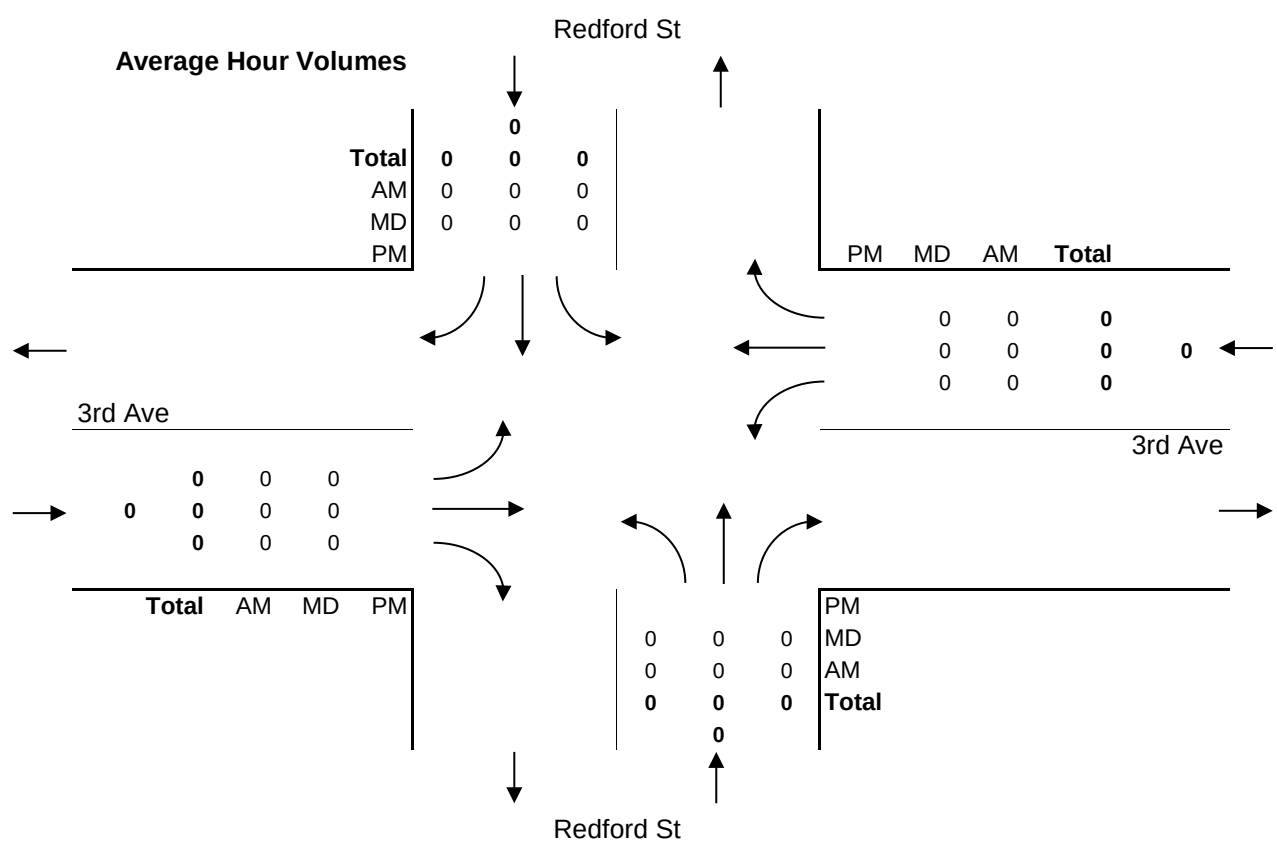

Vehicle Turning Movement Survey
With Classification

Major Route: 3rd Avenue
Minor Route: Redford Street
Municipality: Port Alberni
Filename: 1-3rd Ave @ Redford St-Sep 27, 2017.xlsx
Location #: 1

Date: September 27, 2017
Day-of-week: Wednesday

East/West Route: 3rd Avenue
Intersection Type: 4-leg
Signalized?: Yes
Weather: Clear and dry

Vehicle Classifications: Regular Vehicles
Buses
Articulated Trucks
Cube Trucks
Dump Trucks
Emergency Trucks
Garbage Trucks
Logging Trucks
RVs
Utility Trucks

This data is for Logging Trucks

Shift	Start	End	Duration
AM	7:00	12:00	5.00
MD	12:00	15:00	3.00
PM			
Total	**7:00**		**8.00**

Notes: 24-hour clock used for reporting (15-minute increments)
North Approach - southbound vehicles approaching intersection from the north
15x4 - 15 min volume (from maximum 15 minute period of movement/approach in peak hour period [*]) x 4
Pedestrians - N indicates pedestrians crossing north approach (east/west)

Comments:

Survey Data
Logging Trucks

3rd Avenue @ Redford Street
Wednesday, September 27, 2017

Time Period Begins	Redford St NORTH Approach				Redford St SOUTH Approach				3rd Ave WEST Approach				3rd Ave EAST Approach				Total Volume		Peak				
	Left	Thru	Right	Total	Left	Thru	Right	Total	Left	Thru	Right	Total	Left	Thru	Right	Total	15-min	Hour		N	S	W	E
7:00	0	2	0	**2**	0	0	0	**0**	0	0	0	**0**	0	0	0	**0**	**2**			0	0	0	0
7:15	0	1	0	**1**	0	1	0	**1**	0	0	0	**0**	0	0	0	**0**	**2**			0	0	0	0
7:30	0	0	0	**0**	0	2	0	**2**	0	0	0	**0**	0	0	0	**0**	**2**			0	0	0	0
7:45	0	1	0	**1**	0	4	0	**4**	0	0	0	**0**	0	0	0	**0**	**5**	11		0	0	0	0
8:00	0	2	0	**2**	0	1	0	**1**	0	0	0	**0**	0	0	0	**0**	**3**	12		0	0	0	0
8:15	0	2	0	**2**	0	0	1	**1**	0	0	0	**0**	0	0	0	**0**	**3**	13		0	0	0	0
8:30	0	1	0	**1**	0	2	0	**2**	0	0	0	**0**	0	0	0	**0**	**3**	14		0	0	0	0
8:45	0	0	0	**0**	0	0	0	**0**	0	0	0	**0**	0	0	0	**0**	**0**	9		0	0	0	0
9:00	0	0	0	**0**	0	2	0	**2**	0	0	0	**0**	0	0	0	**0**	**2**	8		0	0	0	0
9:15	0	3	0	**3**	0	1	0	**1**	0	0	0	**0**	0	0	0	**0**	**4**	9		0	0	0	0
9:30	0	1	0	**1**	0	1	0	**1**	0	0	0	**0**	0	0	0	**0**	**2**	8		0	0	0	0
9:45	0	0	0	**0**	0	0	0	**0**	0	0	0	**0**	0	0	0	**0**	**0**	8		0	0	0	0
10:00	0	2	0	**2**	0	1	0	**1**	0	0	0	**0**	0	0	0	**0**	**3**	9		0	0	0	0
10:15	0	1	0	**1**	0	1	0	**1**	0	0	0	**0**	0	0	0	**0**	**2**	7		0	0	0	0
10:30	0	0	0	**0**	0	1	0	**1**	0	0	0	**0**	0	0	0	**0**	**1**	6		0	0	0	0
10:45	0	1	0	**1**	0	0	0	**0**	0	0	0	**0**	0	0	0	**0**	**1**	7		0	0	0	0
11:00	0	0	0	**0**	0	1	0	**1**	0	0	0	**0**	0	0	0	**0**	**1**	5	*	0	0	0	0
11:15	0	1	0	**1**	0	2	0	**2**	0	0	0	**0**	0	0	0	**0**	**3**	6	*	0	0	0	0
11:30	0	1	0	**1**	0	0	0	**0**	0	0	0	**0**	0	0	0	**0**	**1**	6	*	0	0	0	0
11:45	0	1	0	**1**	0	1	0	**1**	0	0	0	**0**	1	0	0	**1**	**3**	8	+	0	0	0	0
Total	0	20	0	**20**	0	21	1	**22**	0	0	0	**0**	1	0	0	**1**	**43**			0	0	0	0
12:00	0	0	0	**0**	0	2	1	**3**	0	0	0	**0**	0	0	0	**0**	**3**			0	0	0	0
12:15	1	2	0	**3**	0	1	0	**1**	0	0	0	**0**	0	0	0	**0**	**4**			0	0	0	0
12:30	0	1	0	**1**	0	0	0	**0**	0	0	0	**0**	0	0	0	**0**	**1**			0	0	0	0
12:45	0	1	0	**1**	0	1	0	**1**	0	0	0	**0**	0	0	0	**0**	**2**	10	+	0	0	0	0
13:00	0	0	0	**0**	0	0	0	**0**	0	0	0	**0**	0	0	0	**0**	**0**	7	*	0	0	0	0
13:15	0	1	0	**1**	0	3	0	**3**	0	0	0	**0**	0	0	0	**0**	**4**	7	*	0	0	0	0
13:30	0	2	0	**2**	0	0	0	**0**	0	0	0	**0**	0	0	0	**0**	**2**	8	*	0	0	0	0
13:45	0	1	0	**1**	0	1	0	**1**	0	0	0	**0**	0	0	0	**0**	**2**	8		0	0	0	0
14:00	0	0	0	**0**	0	1	0	**1**	0	0	0	**0**	0	0	0	**0**	**1**	9		0	0	0	0
14:15	0	0	0	**0**	0	2	0	**2**	0	0	0	**0**	0	0	0	**0**	**2**	7		0	0	0	0
14:30	0	0	0	**0**	0	1	1	**2**	0	0	0	**0**	0	0	0	**0**	**2**	7		0	0	0	0
14:45	0	1	0	**1**	0	1	0	**1**	0	0	0	**0**	0	0	0	**0**	**2**	7		0	0	0	0
n/a																							
n/a																							
n/a																							
n/a																							
Total	1	9	0	**10**	0	13	2	**15**	0	0	0	**0**	0	0	0	**0**	**25**			0	0	0	0
n/a																							
n/a																							
n/a																							
n/a																							
n/a																							
n/a																							
n/a																							
n/a																							
n/a																							
n/a																							
n/a																							
n/a																							
n/a																							
n/a																							
n/a																							
n/a																							
n/a																							
n/a																							
Total																							

AM Peak Period
Logging Trucks

3rd Avenue @ Redford Street
Wednesday, September 27, 2017

Time Period Begins	Redford St NORTH Approach				Redford St SOUTH Approach				3rd Ave WEST Approach				3rd Ave EAST Approach				Total Volume		Peak					Conflict	
	Left	Thru	Right	Total	Left	Thru	Right	Total	Left	Thru	Right	Total	Left	Thru	Right	Total	15-min	Hour		N	S	W	E	15 min	Hr
7:00	0	2	0	2	0	0	0	0	0	0	0	0	0	0	0	0	2			0	0	0	0	2	
7:15	0	1	0	1	0	1	0	1	0	0	0	0	0	0	0	0	2			0	0	0	0	1	
7:30	0	0	0	0	0	2	0	2	0	0	0	0	0	0	0	0	2			0	0	0	0	2	
7:45	0	1	0	1	0	4	0	4	0	0	0	0	0	0	0	0	5	11		0	0	0	0	4	9
8:00	0	2	0	2	0	1	0	1	0	0	0	0	0	0	0	0	3	12		0	0	0	0	2	9
8:15	0	2	0	2	0	0	1	1	0	0	0	0	0	0	0	0	3	13		0	0	0	0	2	10
8:30	0	1	0	1	0	2	0	2	0	0	0	0	0	0	0	0	3	14		0	0	0	0	2	10
8:45	0	0	0	0	0	0	0	0	0	0	0	0	0	0	0	0	0	9		0	0	0	0	0	6
9:00	0	0	0	0	0	2	0	2	0	0	0	0	0	0	0	0	2	8		0	0	0	0	2	6
9:15	0	3	0	3	0	1	0	1	0	0	0	0	0	0	0	0	4	9		0	0	0	0	3	7
9:30	0	1	0	1	0	1	0	1	0	0	0	0	0	0	0	0	2	8		0	0	0	0	1	6
9:45	0	0	0	0	0	0	0	0	0	0	0	0	0	0	0	0	0	8		0	0	0	0	0	6
10:00	0	2	0	2	0	1	0	1	0	0	0	0	0	0	0	0	3	9		0	0	0	0	2	6
10:15	0	1	0	1	0	1	0	1	0	0	0	0	0	0	0	0	2	7		0	0	0	0	1	4
10:30	0	0	0	0	0	1	0	1	0	0	0	0	0	0	0	0	1	6		0	0	0	0	1	4
10:45	0	1	0	1	0	0	0	0	0	0	0	0	0	0	0	0	1	7		0	0	0	0	1	5
11:00	0	0	0	0	0	1	0	1	0	0	0	0	0	0	0	0	1	5	*	0	0	0	0	1	4
11:15	0	1	0	1	0	2	0	2	0	0	0	0	0	0	0	0	3	6	*	0	0	0	0	2	5
11:30	0	1	0	1	0	0	0	0	0	0	0	0	0	0	0	0	1	6	*	0	0	0	0	1	5
11:45	0	1	0	1	0	1	0	1	0	0	0	0	1	0	0	1	3	8	+	0	0	0	0	2	6
Total	0	20	0	**20**	0	21	1	**22**	0	0	0	**0**	1	0	0	**1**	43			0	0	0	0		23
Avg Hr	0	4	0	**4**	0	4	0	**4**	0	0	0	**0**	0	0	0	**0**	9			0	0	0	0		

Peak hour of the intersection

Pk Hr	0	3	0	3	0	4	0	4	0	0	0	0	1	0	0	1	8	*		0	0	0	0		5
15x4	0	4	0	4	0	8	0	8	0	0	0	0	4	0	0	4	12	+		0	0	0	0		12
PHF	n/a	0.75	n/a	**0.75**	n/a	0.50	n/a	**0.50**	n/a	n/a	n/a	**n/a**	0.25	n/a	n/a	**0.25**	0.67			n/a	n/a	n/a	n/a		0.42

Peak hour of conflicting volumes for the intersection

Pk Hr	0	3	0	3	0	4	0	4	0	0	0	0	1	0	0	1	8	*		0	0	0	0		5
15x4	0	4	0	4	0	8	0	8	0	0	0	0	4	0	0	4	12	+		0	0	0	0		12
PHF	n/a	0.75	n/a	**0.75**	n/a	0.50	n/a	**0.50**	n/a	n/a	n/a	**n/a**	0.25	n/a	n/a	**0.25**	0.67			n/a	n/a	n/a	n/a		0.42

** Calculated peak hour occurs during the first or last hour of shift and therefore may be invalid. **

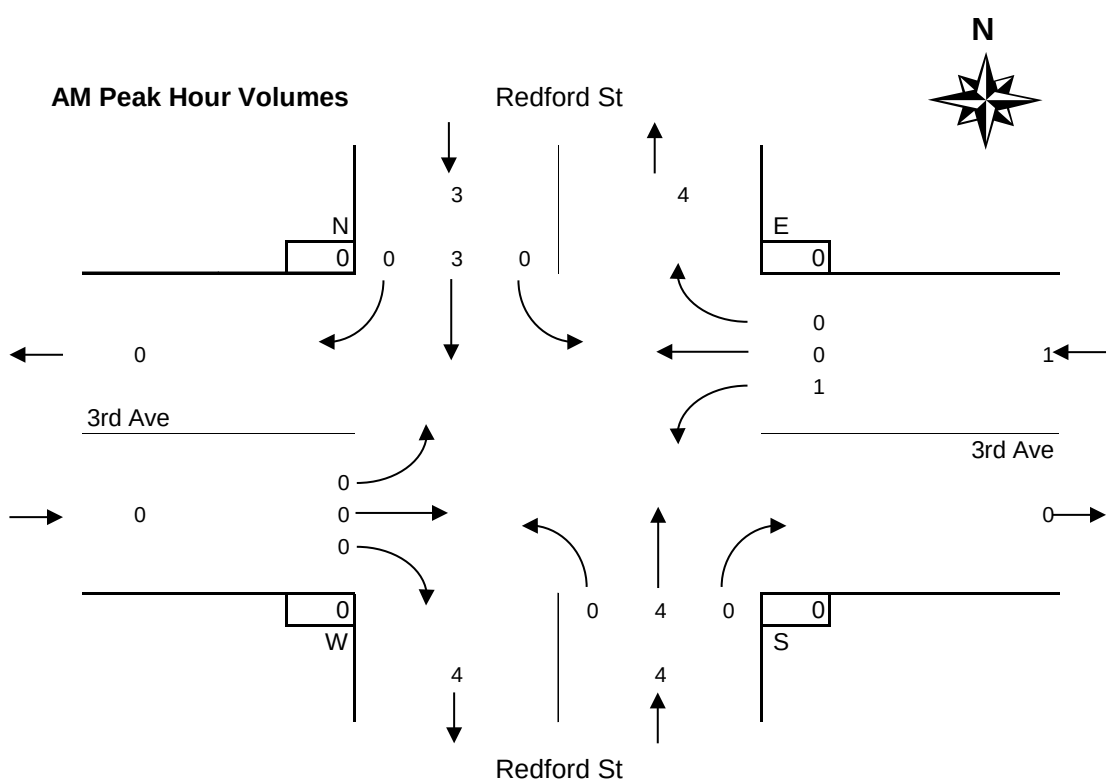

MD Peak Period
Logging Trucks

3rd Avenue @ Redford Street
Wednesday, September 27, 2017

Time Period Begins	Redford St NORTH Approach				Redford St SOUTH Approach				3rd Ave WEST Approach				3rd Ave EAST Approach				Total Volume		Peak					Conflict	
	Left	Thru	Right	Total	Left	Thru	Right	Total	Left	Thru	Right	Total	Left	Thru	Right	Total	15-min	Hour		N	S	W	E	15 min	Hr
12:00	0	0	0	0	0	2	1	3	0	0	0	0	0	0	0	0	3			0	0	0	0	3	
12:15	1	2	0	3	0	1	0	1	0	0	0	0	0	0	0	0	4			0	0	0	0	2	
12:30	0	1	0	1	0	0	0	0	0	0	0	0	0	0	0	0	1			0	0	0	0	1	
12:45	0	1	0	1	0	1	0	1	0	0	0	0	0	0	0	0	2	10	+	0	0	0	0	1	7
13:00	0	0	0	0	0	0	0	0	0	0	0	0	0	0	0	0	0	7	*	0	0	0	0	0	4
13:15	0	1	0	1	0	3	0	3	0	0	0	0	0	0	0	0	4	7	*	0	0	0	0	3	5
13:30	0	2	0	2	0	0	0	0	0	0	0	0	0	0	0	0	2	8	*	0	0	0	0	2	6
13:45	0	1	0	1	0	1	0	1	0	0	0	0	0	0	0	0	2	8		0	0	0	0	1	6
14:00	0	0	0	0	0	1	0	1	0	0	0	0	0	0	0	0	1	9		0	0	0	0	1	7
14:15	0	0	0	0	0	2	0	2	0	0	0	0	0	0	0	0	2	7		0	0	0	0	2	6
14:30	0	0	0	0	0	1	1	2	0	0	0	0	0	0	0	0	2	7		0	0	0	0	2	6
14:45	0	1	0	1	0	1	0	1	0	0	0	0	0	0	0	0	2	7		0	0	0	0	1	6
n/a																									
n/a																									
n/a																									
n/a																									
Total	1	9	0	**10**	0	13	2	**15**	0	0	0	**0**	0	0	0	**0**	25			0	0	0	0		16
Avg Hr	0	3	0	**3**	0	4	1	**5**	0	0	0	**0**	0	0	0	**0**	8			0	0	0	0		

Peak hour of the intersection

Pk Hr	0	4	0	4	0	4	0	4	0	0	0	0	0	0	0	0	8	*		0	0	0	0		4
15x4	0	8	0	8	0	12	0	12	0	0	0	0	0	0	0	0	16	+		0	0	0	0		12
PHF	n/a	0.50	n/a	**0.50**	n/a	0.33	n/a	**0.33**	n/a	n/a	n/a	**n/a**	n/a	n/a	n/a	**n/a**	0.50			n/a	n/a	n/a	n/a		0.33

Peak hour of conflicting volumes for the intersection

Pk Hr	0	1	0	1	0	5	1	6	0	0	0	0	0	0	0	0	7	*		0	0	0	0		6
15x4	0	4	0	4	0	8	4	8	0	0	0	0	0	0	0	0	8	+		0	0	0	0		12
PHF	n/a	0.25	n/a	**0.25**	n/a	0.63	0.25	**0.75**	n/a	n/a	n/a	**n/a**	n/a	n/a	n/a	**n/a**	0.88			n/a	n/a	n/a	n/a		0.50

MD Peak Hour Volumes

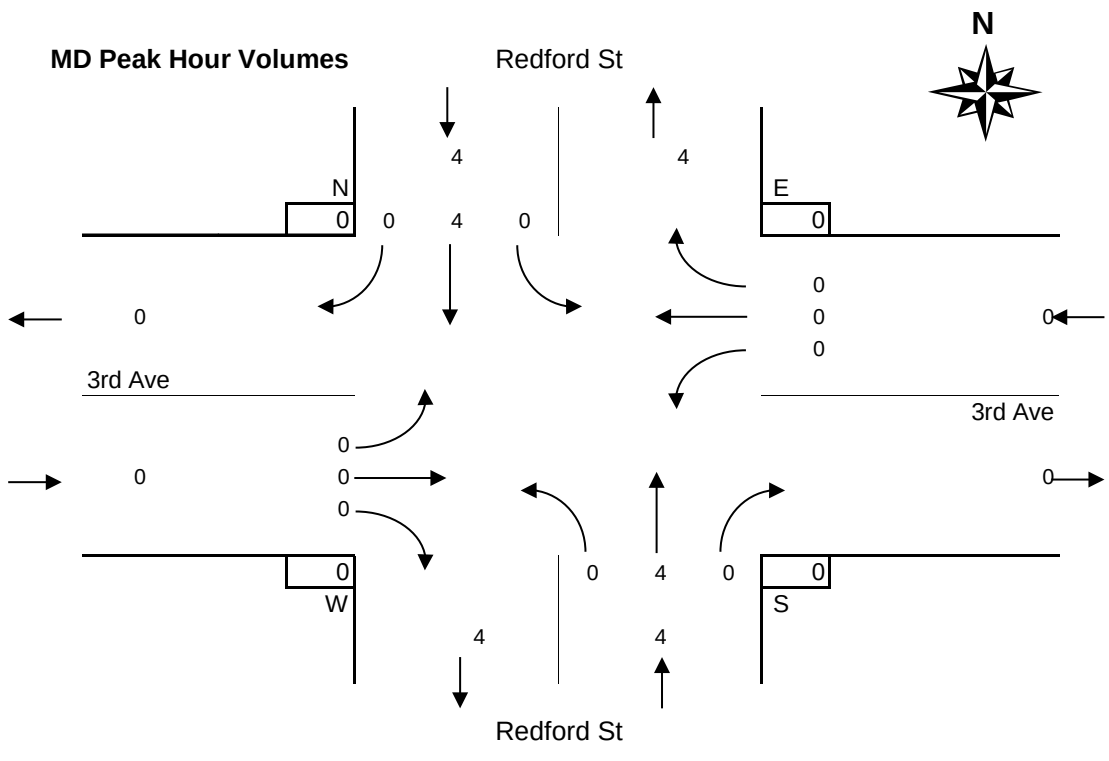

PM Peak Period
Logging Trucks

3rd Avenue @ Redford Street
Wednesday, September 27, 2017

Time Period Begins	Redford St NORTH Approach				Redford St SOUTH Approach				3rd Ave WEST Approach				3rd Ave EAST Approach				Total Volume		Peak					Conflict	
	Left	Thru	Right	Total	Left	Thru	Right	Total	Left	Thru	Right	Total	Left	Thru	Right	Total	15-min	Hour		N	S	W	E	15 min	Hr
n/a																									
n/a																									
n/a																									
n/a																									
n/a																									
n/a																									
n/a																									
n/a																									
n/a																									
n/a																									
n/a																									
n/a																									
n/a																									
n/a																									
n/a																									
n/a																									
n/a																									
n/a																									
n/a																									
Total																									0
Avg Hr																									

Peak hour of the intersection

Pk Hr																		*							0
15x4																		+							0
PHF																									n/a

Peak hour of conflicting volumes for the intersection

Pk Hr																		*							0
15x4																		+							0
PHF																									n/a

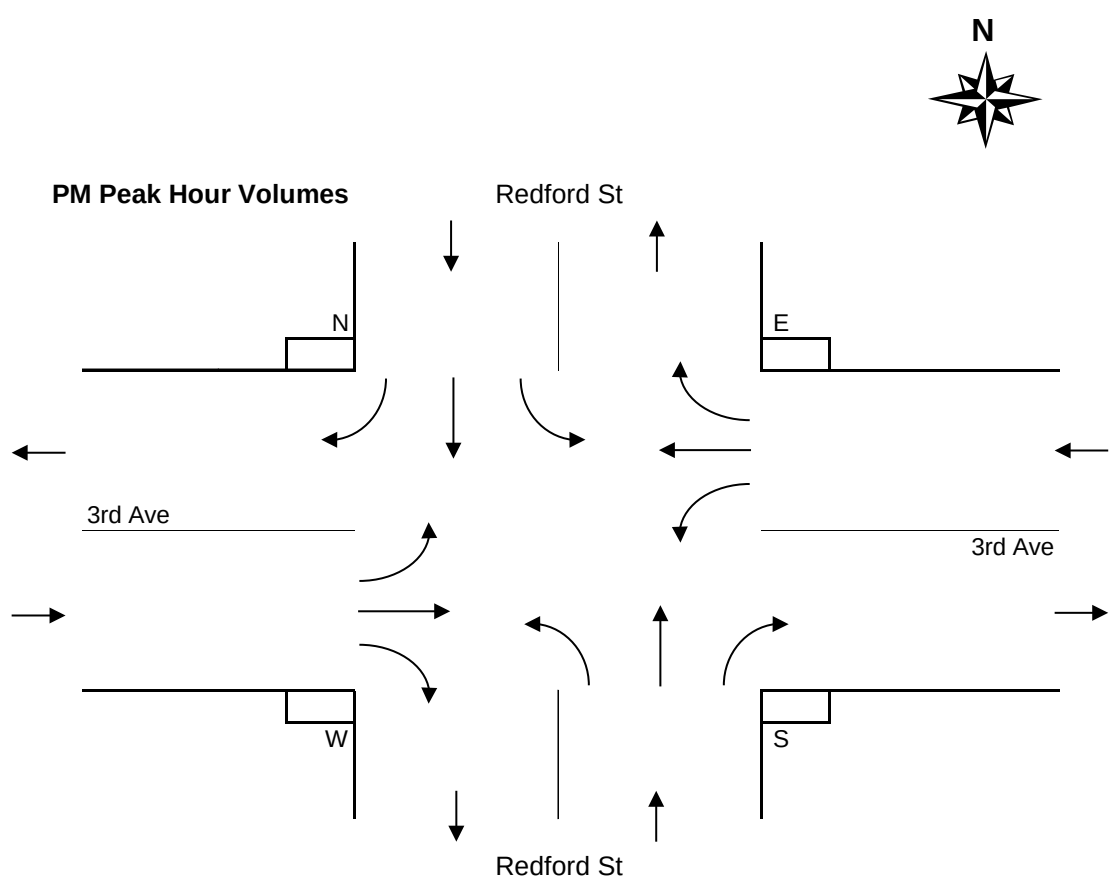

Period Hourly Averages
Logging Trucks

3rd Avenue @ Redford Street
Wednesday, September 27, 2017

Entire Survey Period

8 Hours

	Redford St				Redford St				3rd Ave				3rd Ave							
	NORTH Approach				SOUTH Approach				WEST Approach				EAST Approach				Total			
	Left	Thru	Right	Total	Left	Thru	Right	Total	Left	Thru	Right	Total	Left	Thru	Right	Total	Volume	N	S	W	E
Total	1	29	0	**30**	0	34	3	**37**	0	0	0	**0**	1	0	0	**1**	68	0	0	0	0
Avg Hr	0	4	0	**4**	0	4	0	**5**	0	0	0	**0**	0	0	0	**0**	9	0	0	0	0

AM Peak Period

5 Hours

	Redford St				Redford St				3rd Ave				3rd Ave							
	NORTH Approach				SOUTH Approach				WEST Approach				EAST Approach				Total			
Totals	Left	Thru	Right	Total	Left	Thru	Right	Total	Left	Thru	Right	Total	Left	Thru	Right	Total	Volume	N	S	W	E
Period	0	20	0	**20**	0	21	1	**22**	0	0	0	**0**	1	0	0	**1**	43	0	0	0	0
Avg Hr	0	4	0	**4**	0	4	0	**4**	0	0	0	**0**	0	0	0	**0**	9	0	0	0	0

MD Peak Period

3 Hours

	Redford St				Redford St				3rd Ave				3rd Ave							
	NORTH Approach				SOUTH Approach				WEST Approach				EAST Approach				Total			
Totals	Left	Thru	Right	Total	Left	Thru	Right	Total	Left	Thru	Right	Total	Left	Thru	Right	Total	Volume	N	S	W	E
Total	1	9	0	**10**	0	13	2	**15**	0	0	0	**0**	0	0	0	**0**	25	0	0	0	0
Avg Hr	0	3	0	**3**	0	4	1	**5**	0	0	0	**0**	0	0	0	**0**	8	0	0	0	0

PM Peak Period

Hours

	Redford St				Redford St				3rd Ave				3rd Ave							
	NORTH Approach				SOUTH Approach				WEST Approach				EAST Approach				Total			
Totals	Left	Thru	Right	Total	Left	Thru	Right	Total	Left	Thru	Right	Total	Left	Thru	Right	Total	Volume	N	S	W	E
Total																				
Avg Hr																				

Average Hour Volumes

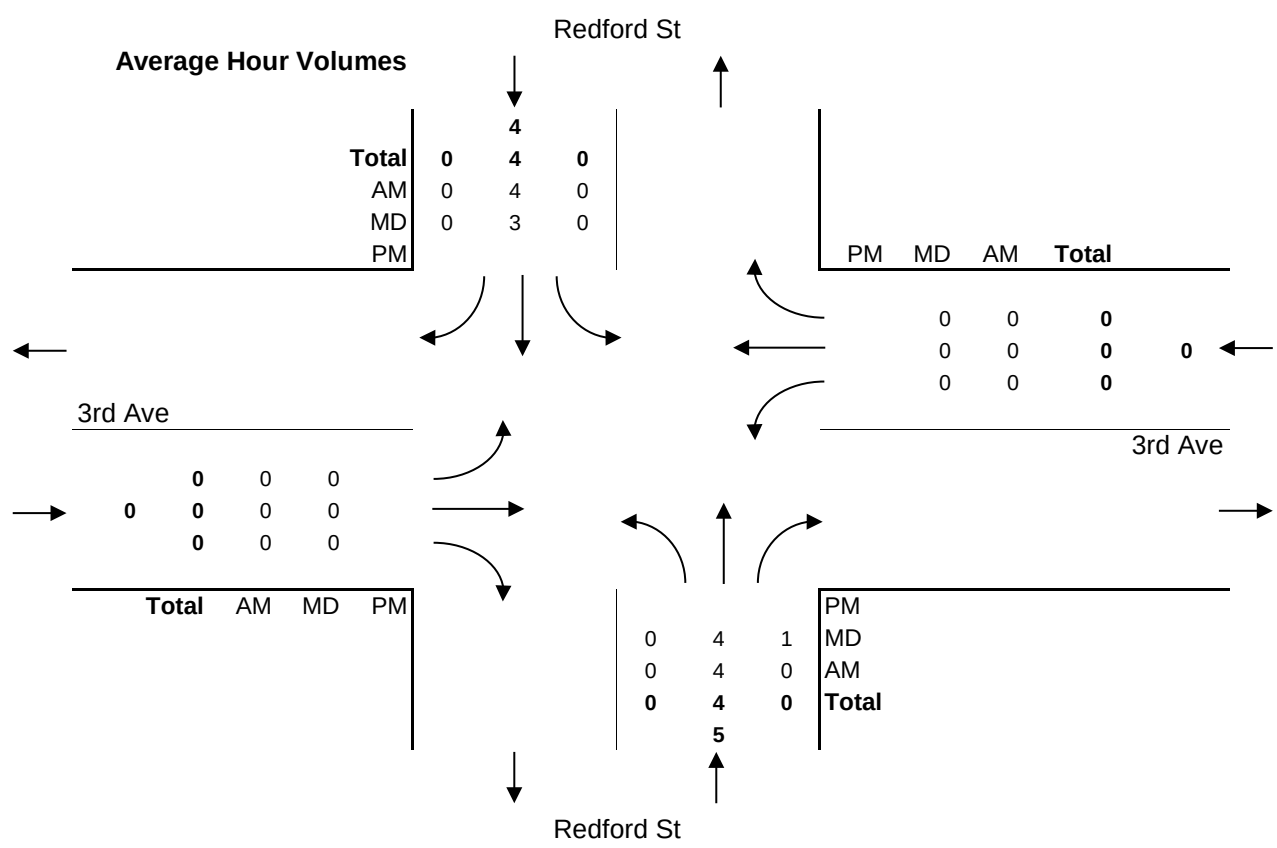

Vehicle Turning Movement Survey
With Classification

Major Route: 3rd Avenue
Minor Route: Redford Street
Municipality: Port Alberni
Filename: 1-3rd Ave @ Redford St-Sep 27, 2017.xlsx
Location #: 1

Date: September 27, 2017
Day-of-week: Wednesday

East/West Route: 3rd Avenue
Intersection Type: 4-leg
Signalized?: Yes
Weather: Clear and dry

Vehicle Classifications: Regular Vehicles
Buses
Articulated Trucks
Cube Trucks
Dump Trucks
Emergency Trucks
Garbage Trucks
Logging Trucks
RVs
Utility Trucks

This data is for RVs

Shift	Start	End	Duration
AM	7:00	12:00	5.00
MD	12:00	15:00	3.00
PM			
Total	**7:00**		**8.00**

Notes: 24-hour clock used for reporting (15-minute increments)
North Approach - southbound vehicles approaching intersection from the north
15x4 - 15 min volume (from maximum 15 minute period of movement/approach in peak hour period [*]) x 4
Pedestrians - N indicates pedestrians crossing north approach (east/west)

Comments:

Survey Data
RVs

3rd Avenue @ Redford Street
Wednesday, September 27, 2017

Time Period Begins	Redford St NORTH Approach				Redford St SOUTH Approach				3rd Ave WEST Approach				3rd Ave EAST Approach				Total Volume		Peak				
	Left	Thru	Right	Total	Left	Thru	Right	Total	Left	Thru	Right	Total	Left	Thru	Right	Total	15-min	Hour		N	S	W	E
7:00	0	0	0	**0**	0	1	0	**1**	0	0	0	**0**	0	0	0	**0**	**1**			0	0	0	0
7:15	0	0	0	**0**	0	0	0	**0**	0	0	0	**0**	0	0	0	**0**	**0**			0	0	0	0
7:30	0	0	0	**0**	0	0	0	**0**	0	0	0	**0**	0	0	0	**0**	**0**			0	0	0	0
7:45	0	0	0	**0**	0	0	0	**0**	0	0	0	**0**	0	0	0	**0**	**0**	1		0	0	0	0
8:00	0	0	0	**0**	0	0	0	**0**	0	0	0	**0**	0	0	0	**0**	**0**	0		0	0	0	0
8:15	0	0	0	**0**	0	0	0	**0**	0	0	0	**0**	0	0	0	**0**	**0**	0		0	0	0	0
8:30	0	0	0	**0**	0	1	0	**1**	0	0	0	**0**	0	0	0	**0**	**1**	1		0	0	0	0
8:45	0	0	0	**0**	0	0	0	**0**	0	0	0	**0**	0	0	0	**0**	**0**	1		0	0	0	0
9:00	0	0	0	**0**	0	0	0	**0**	0	0	0	**0**	0	0	0	**0**	**0**	1		0	0	0	0
9:15	0	0	0	**0**	0	0	0	**0**	0	0	0	**0**	0	0	0	**0**	**0**	1		0	0	0	0
9:30	0	0	0	**0**	0	0	0	**0**	0	0	0	**0**	0	0	0	**0**	**0**	0		0	0	0	0
9:45	0	0	0	**0**	0	0	0	**0**	0	0	0	**0**	0	0	0	**0**	**0**	0		0	0	0	0
10:00	0	0	0	**0**	0	0	0	**0**	0	0	0	**0**	0	0	0	**0**	**0**	0		0	0	0	0
10:15	0	0	0	**0**	0	0	0	**0**	0	0	0	**0**	0	0	0	**0**	**0**	0		0	0	0	0
10:30	0	1	0	**1**	0	0	0	**0**	0	0	0	**0**	0	0	0	**0**	**1**	1		0	0	0	0
10:45	0	0	0	**0**	0	1	0	**1**	0	0	0	**0**	0	0	0	**0**	**1**	2		0	0	0	0
11:00	0	1	0	**1**	0	0	0	**0**	0	0	0	**0**	0	0	0	**0**	**1**	3	*	0	0	0	0
11:15	0	0	0	**0**	0	0	0	**0**	0	0	0	**0**	0	0	0	**0**	**0**	3	*	0	0	0	0
11:30	1	0	0	**1**	0	0	0	**0**	0	0	0	**0**	0	0	0	**0**	**1**	3	*	0	0	0	0
11:45	0	0	0	**0**	0	1	0	**1**	0	0	0	**0**	0	0	0	**0**	**1**	3	+	0	0	0	0
Total	1	2	0	**3**	0	4	0	**4**	0	0	0	**0**	0	0	0	**0**	**7**			0	0	0	0
12:00	0	0	0	**0**	0	0	0	**0**	0	0	0	**0**	1	0	0	**1**	**1**			0	0	0	0
12:15	0	0	0	**0**	0	0	0	**0**	0	0	0	**0**	0	0	0	**0**	**0**			0	0	0	0
12:30	0	1	0	**1**	0	0	0	**0**	0	0	0	**0**	0	0	0	**0**	**1**			0	0	0	0
12:45	0	0	0	**0**	0	0	0	**0**	0	0	0	**0**	0	0	0	**0**	**0**	2	+	0	0	0	0
13:00	0	2	0	**2**	0	0	0	**0**	0	0	0	**0**	0	0	0	**0**	**2**	3	*	0	0	0	0
13:15	0	0	0	**0**	0	0	0	**0**	0	0	0	**0**	0	0	0	**0**	**0**	3	*	0	0	0	0
13:30	0	0	0	**0**	0	0	0	**0**	0	0	0	**0**	0	0	0	**0**	**0**	2	*	0	0	0	0
13:45	0	0	0	**0**	0	1	0	**1**	0	0	0	**0**	0	0	0	**0**	**1**	3		0	0	0	0
14:00	0	0	0	**0**	0	1	0	**1**	0	0	0	**0**	0	0	1	**1**	**2**	3		0	0	0	0
14:15	0	0	0	**0**	0	1	0	**1**	0	0	0	**0**	0	0	0	**0**	**1**	4		0	0	0	0
14:30	0	0	0	**0**	0	1	0	**1**	0	0	0	**0**	0	0	0	**0**	**1**	5		0	0	0	0
14:45	0	0	0	**0**	0	0	0	**0**	0	0	0	**0**	0	0	0	**0**	**0**	4		0	0	0	0
n/a																							
n/a																							
n/a																							
n/a																							
Total	0	3	0	**3**	0	4	0	**4**	0	0	0	**0**	1	0	1	**2**	**9**			0	0	0	0
n/a																							
n/a																							
n/a																							
n/a																							
n/a																							
n/a																							
n/a																							
n/a																							
n/a																							
n/a																							
n/a																							
n/a																							
n/a																							
n/a																							
n/a																							
n/a																							
n/a																							
n/a																							
Total																							

AM Peak Period
RVs

3rd Avenue @ Redford Street
Wednesday, September 27, 2017

Time Period Begins	Redford St NORTH Approach				Redford St SOUTH Approach				3rd Ave WEST Approach				3rd Ave EAST Approach				Total Volume		Peak					Conflict	
	Left	Thru	Right	Total	Left	Thru	Right	Total	Left	Thru	Right	Total	Left	Thru	Right	Total	15-min	Hour		N	S	W	E	15 min	Hr
7:00	0	0	0	0	0	1	0	1	0	0	0	0	0	0	0	0	1			0	0	0	0	1	
7:15	0	0	0	0	0	0	0	0	0	0	0	0	0	0	0	0	0			0	0	0	0	0	
7:30	0	0	0	0	0	0	0	0	0	0	0	0	0	0	0	0	0			0	0	0	0	0	
7:45	0	0	0	0	0	0	0	0	0	0	0	0	0	0	0	0	0	1		0	0	0	0	0	1
8:00	0	0	0	0	0	0	0	0	0	0	0	0	0	0	0	0	0	0		0	0	0	0	0	0
8:15	0	0	0	0	0	0	0	0	0	0	0	0	0	0	0	0	0	0		0	0	0	0	0	0
8:30	0	0	0	0	0	1	0	1	0	0	0	0	0	0	0	0	1	1		0	0	0	0	1	1
8:45	0	0	0	0	0	0	0	0	0	0	0	0	0	0	0	0	0	1		0	0	0	0	0	1
9:00	0	0	0	0	0	0	0	0	0	0	0	0	0	0	0	0	0	1		0	0	0	0	0	1
9:15	0	0	0	0	0	0	0	0	0	0	0	0	0	0	0	0	0	1		0	0	0	0	0	1
9:30	0	0	0	0	0	0	0	0	0	0	0	0	0	0	0	0	0	0		0	0	0	0	0	0
9:45	0	0	0	0	0	0	0	0	0	0	0	0	0	0	0	0	0	0		0	0	0	0	0	0
10:00	0	0	0	0	0	0	0	0	0	0	0	0	0	0	0	0	0	0		0	0	0	0	0	0
10:15	0	0	0	0	0	0	0	0	0	0	0	0	0	0	0	0	0	0		0	0	0	0	0	0
10:30	0	1	0	1	0	0	0	0	0	0	0	0	0	0	0	0	1	1		0	0	0	0	1	1
10:45	0	0	0	0	0	1	0	1	0	0	0	0	0	0	0	0	1	2		0	0	0	0	1	2
11:00	0	1	0	1	0	0	0	0	0	0	0	0	0	0	0	0	1	3	*	0	0	0	0	1	3
11:15	0	0	0	0	0	0	0	0	0	0	0	0	0	0	0	0	0	3	*	0	0	0	0	0	3
11:30	1	0	0	1	0	0	0	0	0	0	0	0	0	0	0	0	1	3	*	0	0	0	0	1	3
11:45	0	0	0	0	0	1	0	1	0	0	0	0	0	0	0	0	1	3	+	0	0	0	0	1	3
Total	1	2	0	**3**	0	4	0	**4**	0	0	0	**0**	0	0	0	**0**	7			0	0	0	0		5
Avg Hr	0	0	0	**1**	0	1	0	**1**	0	0	0	**0**	0	0	0	**0**	1			0	0	0	0		

Peak hour of the intersection

Pk Hr	1	1	0	2	0	1	0	1	0	0	0	0	0	0	0	0	3	*		0	0	0	0		2
15x4	4	4	0	4	0	4	0	4	0	0	0	0	0	0	0	0	4	+		0	0	0	0		8
PHF	0.25	0.25	n/a	**0.50**	n/a	0.25	n/a	**0.25**	n/a	n/a	n/a	**n/a**	n/a	n/a	n/a	**n/a**	0.75			n/a	n/a	n/a	n/a		0.25

Peak hour of conflicting volumes for the intersection

Pk Hr	1	1	0	2	0	1	0	1	0	0	0	0	0	0	0	0	3	*		0	0	0	0		2
15x4	4	4	0	4	0	4	0	4	0	0	0	0	0	0	0	0	4	+		0	0	0	0		8
PHF	0.25	0.25	n/a	**0.50**	n/a	0.25	n/a	**0.25**	n/a	n/a	n/a	**n/a**	n/a	n/a	n/a	**n/a**	0.75			n/a	n/a	n/a	n/a		0.25

** Calculated peak hour occurs during the first or last hour of shift and therefore may be invalid. **

AM Peak Hour Volumes

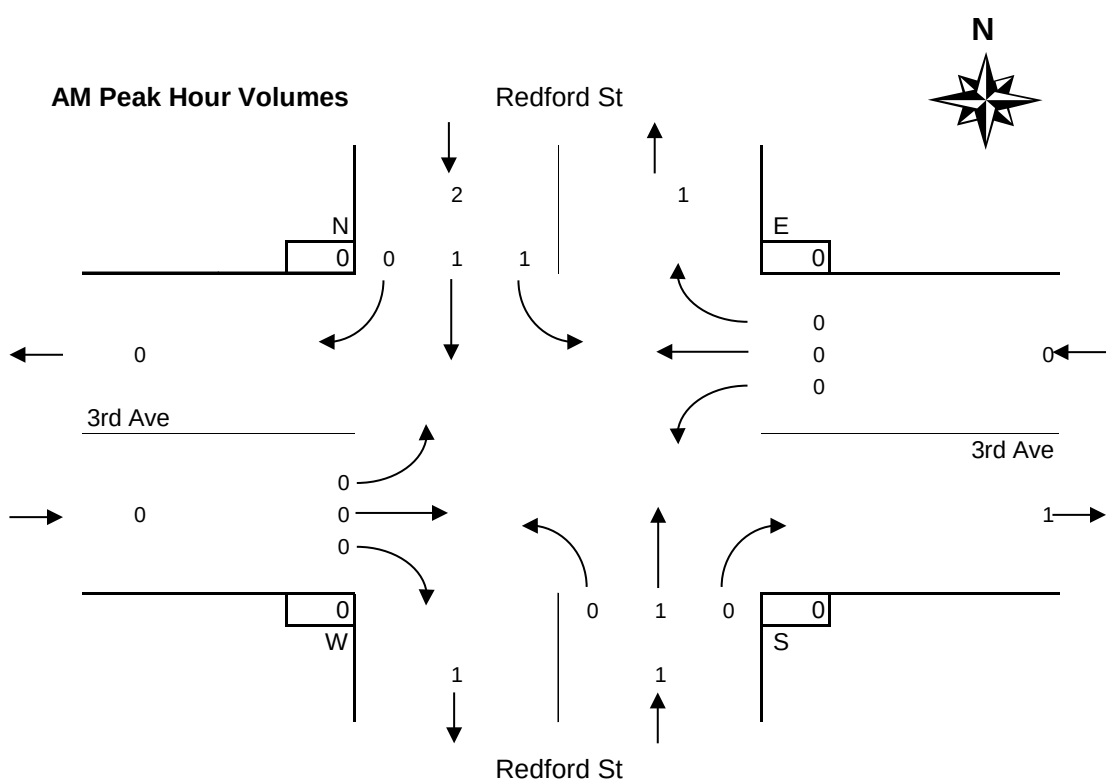

MD Peak Period
RVs

3rd Avenue @ Redford Street
Wednesday, September 27, 2017

Time Period Begins	Redford St NORTH Approach				Redford St SOUTH Approach				3rd Ave WEST Approach				3rd Ave EAST Approach				Total Volume		Peak					Conflict	
	Left	Thru	Right	Total	Left	Thru	Right	Total	Left	Thru	Right	Total	Left	Thru	Right	Total	15-min	Hour		N	S	W	E	15 min	Hr
12:00	0	0	0	0	0	0	0	0	0	0	0	0	1	0	0	1	1			0	0	0	0	1	
12:15	0	0	0	0	0	0	0	0	0	0	0	0	0	0	0	0	0			0	0	0	0	0	
12:30	0	1	0	1	0	0	0	0	0	0	0	0	0	0	0	0	1			0	0	0	0	1	
12:45	0	0	0	0	0	0	0	0	0	0	0	0	0	0	0	0	0	2	+	0	0	0	0	0	2
13:00	0	2	0	2	0	0	0	0	0	0	0	0	0	0	0	0	2	3	*	0	0	0	0	2	3
13:15	0	0	0	0	0	0	0	0	0	0	0	0	0	0	0	0	0	3	*	0	0	0	0	0	3
13:30	0	0	0	0	0	0	0	0	0	0	0	0	0	0	0	0	0	2	*	0	0	0	0	0	2
13:45	0	0	0	0	0	1	0	1	0	0	0	0	0	0	0	0	1	3		0	0	0	0	1	3
14:00	0	0	0	0	0	1	0	1	0	0	0	0	0	0	1	1	2	3		0	0	0	0	2	3
14:15	0	0	0	0	0	1	0	1	0	0	0	0	0	0	0	0	1	4		0	0	0	0	1	4
14:30	0	0	0	0	0	1	0	1	0	0	0	0	0	0	0	0	1	5		0	0	0	0	1	5
14:45	0	0	0	0	0	0	0	0	0	0	0	0	0	0	0	0	0	4		0	0	0	0	0	4
n/a																									
n/a																									
n/a																									
n/a																									
Total	0	3	0	**3**	0	4	0	**4**	0	0	0	**0**	1	0	1	**2**	9			0	0	0	0		5
Avg Hr	0	1	0	**1**	0	1	0	**1**	0	0	0	**0**	0	0	0	**1**	3			0	0	0	0		

Peak hour of the intersection

Pk Hr	0	2	0	2	0	0	0	0	0	0	0	0	0	0	0	0	2	*		0	0	0	0		2
15x4	0	8	0	8	0	0	0	0	0	0	0	0	0	0	0	0	8	+		0	0	0	0		8
PHF	n/a	0.25	n/a	**0.25**	n/a	n/a	n/a	**n/a**	n/a	n/a	n/a	**n/a**	n/a	n/a	n/a	**n/a**	0.25			n/a	n/a	n/a	n/a		0.25

Peak hour of conflicting volumes for the intersection

Pk Hr	0	0	0	0	0	3	0	3	0	0	0	0	0	0	1	1	4	*		0	0	0	0		4
15x4	0	0	0	0	0	4	0	4	0	0	0	0	0	0	4	4	8	+		0	0	0	0		8
PHF	n/a	n/a	n/a	**n/a**	n/a	0.75	n/a	**0.75**	n/a	n/a	n/a	**n/a**	n/a	n/a	0.25	**0.25**	0.50			n/a	n/a	n/a	n/a		0.50

MD Peak Hour Volumes

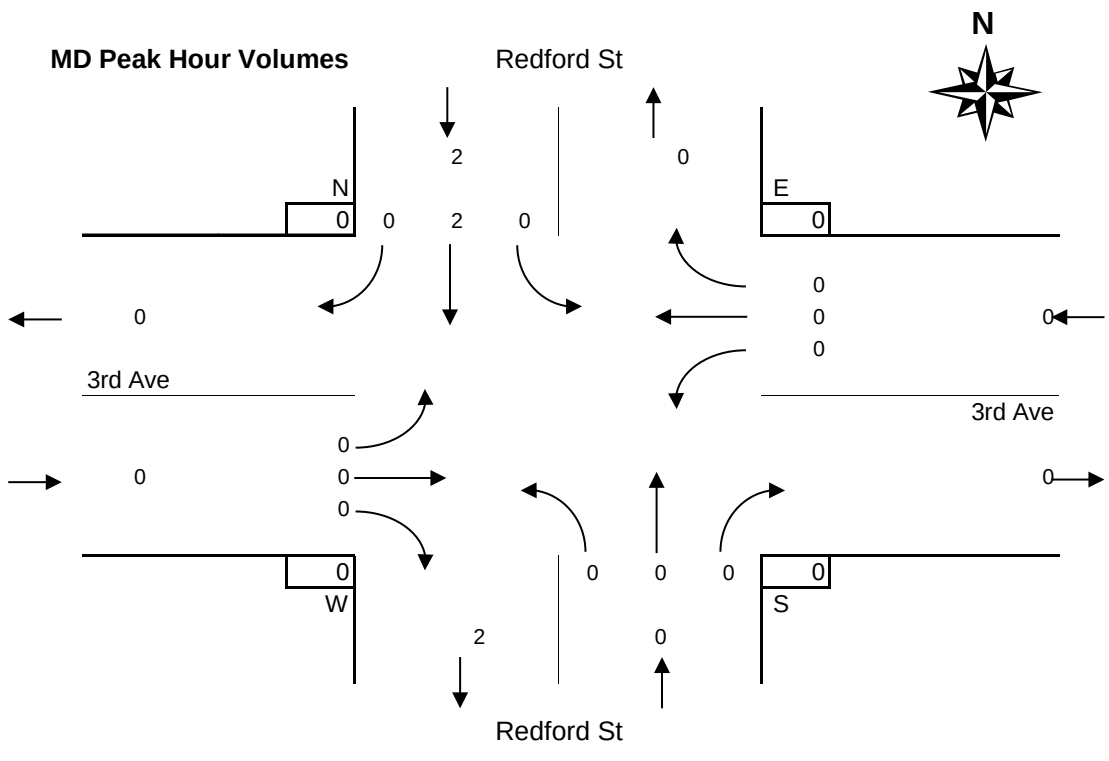

PM Peak Period
RVs

3rd Avenue @ Redford Street
Wednesday, September 27, 2017

Time Period Begins	Redford St NORTH Approach				Redford St SOUTH Approach				3rd Ave WEST Approach				3rd Ave EAST Approach				Total Volume		Peak					Conflict	
	Left	Thru	Right	Total	Left	Thru	Right	Total	Left	Thru	Right	Total	Left	Thru	Right	Total	15-min	Hour		N	S	W	E	15 min	Hr
n/a																									
n/a																									
n/a																									
n/a																									
n/a																									
n/a																									
n/a																									
n/a																									
n/a																									
n/a																									
n/a																									
n/a																									
n/a																									
n/a																									
n/a																									
n/a																									
n/a																									
n/a																									
n/a																									
Total																									0
Avg Hr																									

Peak hour of the intersection

Pk Hr																		*							0
15x4																		+							0
PHF																									n/a

Peak hour of conflicting volumes for the intersection

Pk Hr																		*							0
15x4																		+							0
PHF																									n/a

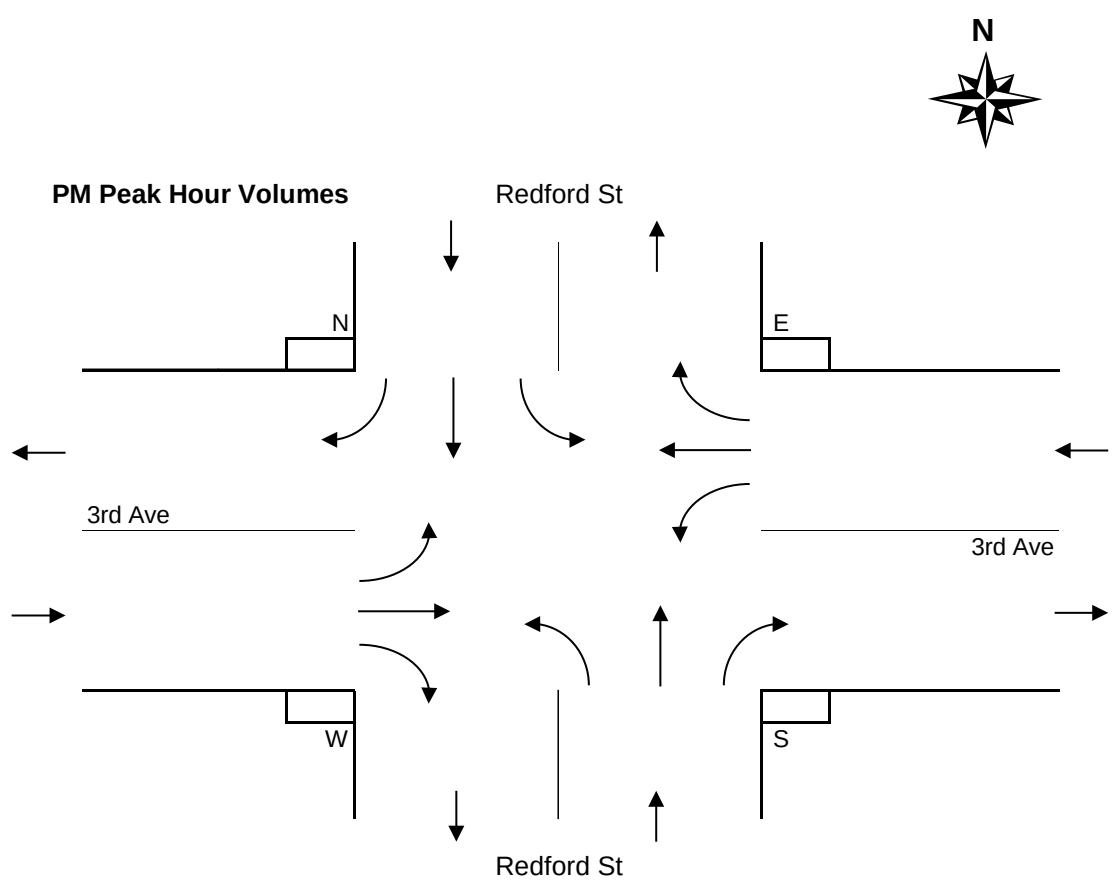

Period Hourly Averages
RVs

3rd Avenue @ Redford Street
Wednesday, September 27, 2017

Entire Survey Period

8 Hours

	Redford St				Redford St				3rd Ave				3rd Ave							
	NORTH Approach				SOUTH Approach				WEST Approach				EAST Approach				Total			
	Left	Thru	Right	Total	Left	Thru	Right	Total	Left	Thru	Right	Total	Left	Thru	Right	Total	Volume	N	S	W	E
Total	1	5	0	**6**	0	8	0	**8**	0	0	0	**0**	1	0	1	**2**	16	0	0	0	0
Avg Hr	0	1	0	**1**	0	1	0	**1**	0	0	0	**0**	0	0	0	**0**	2	0	0	0	0

AM Peak Period

5 Hours

	Redford St				Redford St				3rd Ave				3rd Ave							
	NORTH Approach				SOUTH Approach				WEST Approach				EAST Approach				Total			
Totals	Left	Thru	Right	Total	Left	Thru	Right	Total	Left	Thru	Right	Total	Left	Thru	Right	Total	Volume	N	S	W	E
Period	1	2	0	**3**	0	4	0	**4**	0	0	0	**0**	0	0	0	**0**	7	0	0	0	0
Avg Hr	0	0	0	**1**	0	1	0	**1**	0	0	0	**0**	0	0	0	**0**	1	0	0	0	0

MD Peak Period

3 Hours

	Redford St				Redford St				3rd Ave				3rd Ave							
	NORTH Approach				SOUTH Approach				WEST Approach				EAST Approach				Total			
Totals	Left	Thru	Right	Total	Left	Thru	Right	Total	Left	Thru	Right	Total	Left	Thru	Right	Total	Volume	N	S	W	E
Total	0	3	0	**3**	0	4	0	**4**	0	0	0	**0**	1	0	1	**2**	9	0	0	0	0
Avg Hr	0	1	0	**1**	0	1	0	**1**	0	0	0	**0**	0	0	0	**1**	3	0	0	0	0

PM Peak Period

Hours

	Redford St				Redford St				3rd Ave				3rd Ave							
	NORTH Approach				SOUTH Approach				WEST Approach				EAST Approach				Total			
Totals	Left	Thru	Right	Total	Left	Thru	Right	Total	Left	Thru	Right	Total	Left	Thru	Right	Total	Volume	N	S	W	E
Total																				
Avg Hr																				

Average Hour Volumes

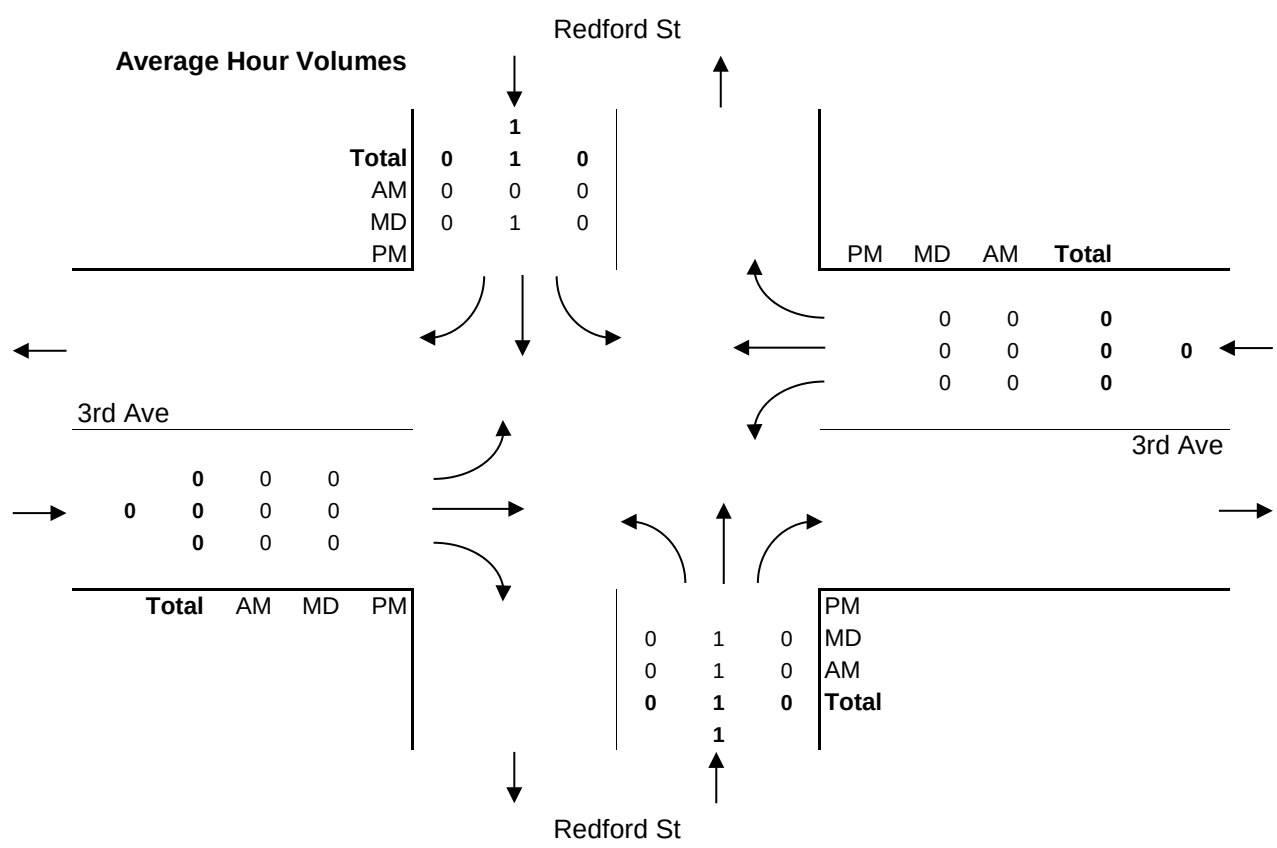

Vehicle Turning Movement Survey
With Classification

Major Route: 3rd Avenue
Minor Route: Redford Street
Municipality: Port Alberni
Filename: 1-3rd Ave @ Redford St-Sep 27, 2017.xlsx
Location #: 1

Date: September 27, 2017
Day-of-week: Wednesday

East/West Route: 3rd Avenue
Intersection Type: 4-leg
Signalized?: Yes
Weather: Clear and dry

Vehicle Classifications: Regular Vehicles
Buses
Articulated Trucks
Cube Trucks
Dump Trucks
Emergency Trucks
Garbage Trucks
Logging Trucks
RVs
Utility Trucks

This data is for Utility Trucks

Shift	Start	End	Duration
AM	7:00	12:00	5.00
MD	12:00	15:00	3.00
PM			
Total	**7:00**		**8.00**

Notes: 24-hour clock used for reporting (15-minute increments)
North Approach - southbound vehicles approaching intersection from the north
15x4 - 15 min volume (from maximum 15 minute period of movement/approach in peak hour period [*]) x 4
Pedestrians - N indicates pedestrians crossing north approach (east/west)

Comments:

Survey Data
Utility Trucks

3rd Avenue @ Redford Street
Wednesday, September 27, 2017

Time Period Begins	Redford St NORTH Approach				Redford St SOUTH Approach				3rd Ave WEST Approach				3rd Ave EAST Approach				Total Volume		Peak				
	Left	Thru	Right	Total	Left	Thru	Right	Total	Left	Thru	Right	Total	Left	Thru	Right	Total	15-min	Hour		N	S	W	E
7:00	0	1	0	**1**	0	0	0	**0**	0	0	0	**0**	0	0	0	**0**	**1**			0	0	0	0
7:15	0	2	0	**2**	0	0	0	**0**	0	0	0	**0**	1	0	0	**1**	**3**			0	0	0	0
7:30	0	1	0	**1**	1	0	0	**1**	0	0	0	**0**	0	0	1	**1**	**3**			0	0	0	0
7:45	0	2	0	**2**	1	2	2	**5**	0	0	0	**0**	3	0	0	**3**	**10**	17		0	0	0	0
8:00	0	2	0	**2**	0	2	1	**3**	0	0	1	**1**	0	0	0	**0**	**6**	22		0	0	0	0
8:15	0	0	0	**0**	0	4	1	**5**	0	0	0	**0**	3	0	0	**3**	**8**	27		0	0	0	0
8:30	0	0	0	**0**	0	2	0	**2**	0	0	1	**1**	1	0	0	**1**	**4**	28		0	0	0	0
8:45	1	3	0	**4**	0	4	0	**4**	1	0	0	**1**	1	0	0	**1**	**10**	28		0	0	0	0
9:00	0	2	0	**2**	0	0	0	**0**	0	0	0	**0**	0	0	0	**0**	**2**	24		0	0	0	0
9:15	0	1	0	**1**	0	0	0	**0**	0	0	0	**0**	0	0	0	**0**	**1**	17		0	0	0	0
9:30	0	3	0	**3**	0	2	2	**4**	0	0	0	**0**	1	0	1	**2**	**9**	22		0	0	0	0
9:45	0	1	0	**1**	0	1	0	**1**	0	0	0	**0**	0	0	0	**0**	**2**	14		0	0	0	0
10:00	0	3	0	**3**	0	0	0	**0**	0	0	0	**0**	1	0	0	**1**	**4**	16		0	0	0	0
10:15	0	0	0	**0**	0	1	0	**1**	0	0	0	**0**	2	0	0	**2**	**3**	18		0	0	0	0
10:30	0	1	0	**1**	0	2	1	**3**	0	0	1	**1**	0	0	0	**0**	**5**	14		0	0	0	0
10:45	0	2	0	**2**	0	1	1	**2**	0	0	1	**1**	0	0	0	**0**	**5**	17		0	0	0	0
11:00	1	1	0	**2**	0	3	0	**3**	0	1	0	**1**	2	0	0	**2**	**8**	21	*	0	0	0	0
11:15	0	0	0	**0**	0	2	2	**4**	0	0	0	**0**	0	0	0	**0**	**4**	22	*	0	0	0	0
11:30	1	2	0	**3**	0	2	0	**2**	0	0	0	**0**	1	1	1	**3**	**8**	25	*	0	0	0	0
11:45	0	1	0	**1**	0	0	1	**1**	0	0	0	**0**	0	0	0	**0**	**2**	22	+	0	0	0	0
Total	3	28	0	**31**	2	28	11	**41**	1	1	4	**6**	16	1	3	**20**	**98**			0	0	0	0
12:00	0	0	1	**1**	0	0	0	**0**	0	0	0	**0**	0	0	0	**0**	**1**			0	0	0	0
12:15	0	0	0	**0**	0	0	0	**0**	0	0	0	**0**	0	0	1	**1**	**1**			0	0	0	0
12:30	0	1	0	**1**	1	0	1	**2**	0	0	0	**0**	0	0	1	**1**	**4**			0	0	0	0
12:45	2	0	0	**2**	1	0	1	**2**	0	0	0	**0**	1	0	0	**1**	**5**	11	+	0	0	0	0
13:00	0	2	0	**2**	0	2	0	**2**	0	0	0	**0**	0	0	0	**0**	**4**	14	*	0	0	0	0
13:15	0	2	0	**2**	0	2	0	**2**	0	0	0	**0**	1	1	1	**3**	**7**	20	*	0	0	0	0
13:30	0	0	0	**0**	0	1	2	**3**	0	1	0	**1**	0	0	1	**1**	**5**	21	*	0	0	0	0
13:45	0	1	0	**1**	0	2	0	**2**	0	0	0	**0**	0	0	0	**0**	**3**	19		0	0	0	0
14:00	0	2	0	**2**	0	2	1	**3**	0	0	0	**0**	3	0	0	**3**	**8**	23		0	0	0	0
14:15	0	2	0	**2**	0	1	2	**3**	0	0	0	**0**	0	0	1	**1**	**6**	22		0	0	0	0
14:30	0	1	0	**1**	0	1	1	**2**	0	0	0	**0**	2	0	0	**2**	**5**	22		0	0	0	0
14:45	0	3	0	**3**	0	2	4	**6**	0	0	0	**0**	2	0	0	**2**	**11**	30		0	0	0	0
n/a																							
n/a																							
n/a																							
n/a																							
Total	2	14	1	**17**	2	13	12	**27**	0	1	0	**1**	9	1	5	**15**	**60**			0	0	0	0
n/a																							
n/a																							
n/a																							
n/a																							
n/a																							
n/a																							
n/a																							
n/a																							
n/a																							
n/a																							
n/a																							
n/a																							
n/a																							
n/a																							
n/a																							
n/a																							
n/a																							
n/a																							
Total																							

AM Peak Period
Utility Trucks

3rd Avenue @ Redford Street
Wednesday, September 27, 2017

Time Period Begins	Redford St NORTH Approach				Redford St SOUTH Approach				3rd Ave WEST Approach				3rd Ave EAST Approach				Total Volume		Peak					Conflict	
	Left	Thru	Right	Total	Left	Thru	Right	Total	Left	Thru	Right	Total	Left	Thru	Right	Total	15-min	Hour		N	S	W	E	15 min	Hr
7:00	0	1	0	1	0	0	0	0	0	0	0	0	0	0	0	0	1			0	0	0	0	1	
7:15	0	2	0	2	0	0	0	0	0	0	0	0	1	0	0	1	3			0	0	0	0	3	
7:30	0	1	0	1	1	0	0	1	0	0	0	0	0	0	1	1	3			0	0	0	0	3	
7:45	0	2	0	2	1	2	2	5	0	0	0	0	3	0	0	3	10	17		0	0	0	0	7	14
8:00	0	2	0	2	0	2	1	3	0	0	1	1	0	0	0	0	6	22		0	0	0	0	4	17
8:15	0	0	0	0	0	4	1	5	0	0	0	0	3	0	0	3	8	27		0	0	0	0	8	22
8:30	0	0	0	0	0	2	0	2	0	0	1	1	1	0	0	1	4	28		0	0	0	0	4	23
8:45	1	3	0	4	0	4	0	4	1	0	0	1	1	0	0	1	10	28		0	0	0	0	6	22
9:00	0	2	0	2	0	0	0	0	0	0	0	0	0	0	0	0	2	24		0	0	0	0	2	20
9:15	0	1	0	1	0	0	0	0	0	0	0	0	0	0	0	0	1	17		0	0	0	0	1	13
9:30	0	3	0	3	0	2	2	4	0	0	0	0	1	0	1	2	9	22		0	0	0	0	5	14
9:45	0	1	0	1	0	1	0	1	0	0	0	0	0	0	0	0	2	14		0	0	0	0	1	9
10:00	0	3	0	3	0	0	0	0	0	0	0	0	1	0	0	1	4	16		0	0	0	0	4	11
10:15	0	0	0	0	0	1	0	1	0	0	0	0	2	0	0	2	3	18		0	0	0	0	3	13
10:30	0	1	0	1	0	2	1	3	0	0	1	1	0	0	0	0	5	14		0	0	0	0	4	12
10:45	0	2	0	2	0	1	1	2	0	0	1	1	0	0	0	0	5	17		0	0	0	0	3	14
11:00	1	1	0	2	0	3	0	3	0	1	0	1	2	0	0	2	8	21	*	0	0	0	0	7	17
11:15	0	0	0	0	0	2	2	4	0	0	0	0	0	0	0	0	4	22	*	0	0	0	0	4	18
11:30	1	2	0	3	0	2	0	2	0	0	0	0	1	1	1	3	8	25	*	0	0	0	0	5	19
11:45	0	1	0	1	0	0	1	1	0	0	0	0	0	0	0	0	2	22	+	0	0	0	0	1	17
Total	3	28	0	**31**	2	28	11	**41**	1	1	4	**6**	16	1	3	**20**	98			0	0	0	0		63
Avg Hr	1	6	0	**6**	0	6	2	**8**	0	0	1	**1**	3	0	1	**4**	20			0	0	0	0		

Peak hour of the intersection

Pk Hr	2	4	0	6	0	7	3	10	0	1	0	1	3	1	1	5	22	*		0	0	0	0		16
15x4	4	8	0	12	0	12	8	16	0	4	0	4	8	4	4	12	32	+		0	0	0	0		36
PHF	0.50	0.50	n/a	**0.50**	n/a	0.58	0.38	**0.63**	n/a	0.25	n/a	**0.25**	0.38	0.25	0.25	**0.42**	0.69			n/a	n/a	n/a	n/a		0.44

Peak hour of conflicting volumes for the intersection

Pk Hr	2	4	0	6	0	7	3	10	0	1	0	1	3	1	1	5	22	*		0	0	0	0		16
15x4	4	8	0	12	0	12	8	16	0	4	0	4	8	4	4	12	32	+		0	0	0	0		36
PHF	0.50	0.50	n/a	**0.50**	n/a	0.58	0.38	**0.63**	n/a	0.25	n/a	**0.25**	0.38	0.25	0.25	**0.42**	0.69			n/a	n/a	n/a	n/a		0.44

** Calculated peak hour occurs during the first or last hour of shift and therefore may be invalid. **

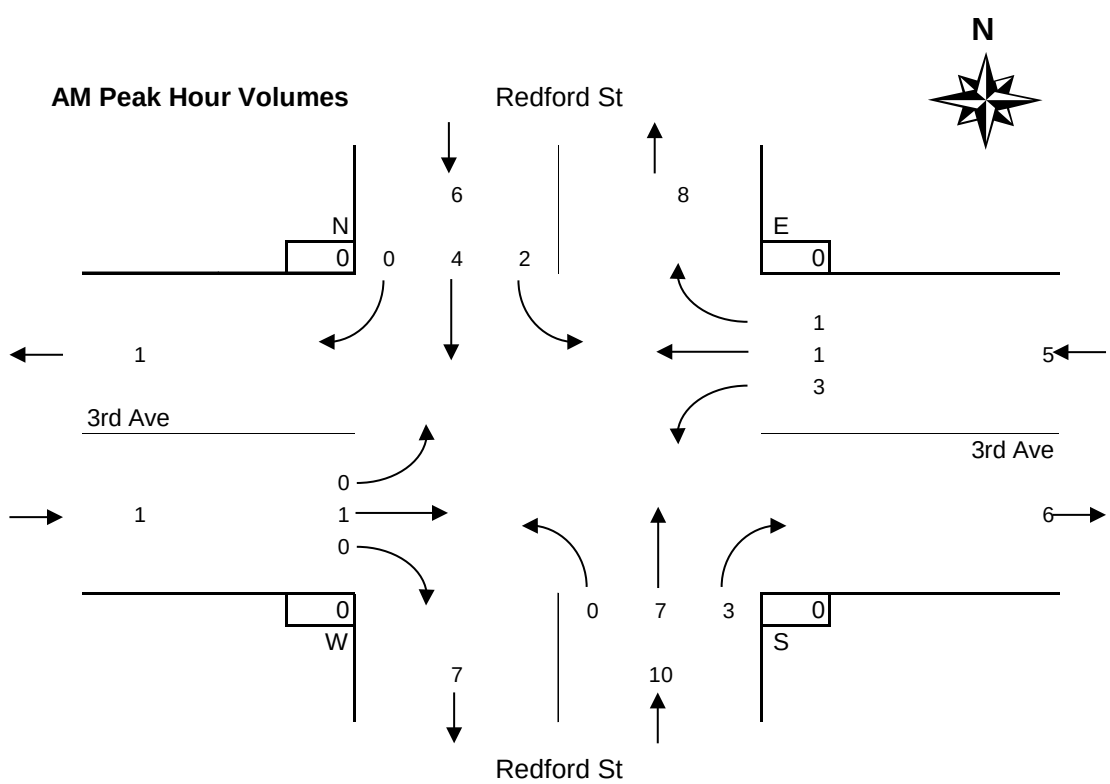

MD Peak Period
Utility Trucks

3rd Avenue @ Redford Street
Wednesday, September 27, 2017

Time Period Begins	Redford St NORTH Approach				Redford St SOUTH Approach				3rd Ave WEST Approach				3rd Ave EAST Approach				Total Volume		Peak					Conflict	
	Left	Thru	Right	Total	Left	Thru	Right	Total	Left	Thru	Right	Total	Left	Thru	Right	Total	15-min	Hour		N	S	W	E	15 min	Hr
12:00	0	0	1	1	0	0	0	0	0	0	0	0	0	0	0	0	1			0	0	0	0	1	
12:15	0	0	0	0	0	0	0	0	0	0	0	0	0	0	1	1	1			0	0	0	0	1	
12:30	0	1	0	1	1	0	1	2	0	0	0	0	0	0	1	1	4			0	0	0	0	3	
12:45	2	0	0	2	1	0	1	2	0	0	0	0	1	0	0	1	5	11	+	0	0	0	0	4	9
13:00	0	2	0	2	0	2	0	2	0	0	0	0	0	0	0	0	4	14	*	0	0	0	0	2	10
13:15	0	2	0	2	0	2	0	2	0	0	0	0	1	1	1	3	7	20	*	0	0	0	0	4	13
13:30	0	0	0	0	0	1	2	3	0	1	0	1	0	0	1	1	5	21	*	0	0	0	0	4	14
13:45	0	1	0	1	0	2	0	2	0	0	0	0	0	0	0	0	3	19		0	0	0	0	2	12
14:00	0	2	0	2	0	2	1	3	0	0	0	0	3	0	0	3	8	23		0	0	0	0	6	16
14:15	0	2	0	2	0	1	2	3	0	0	0	0	0	0	1	1	6	22		0	0	0	0	4	16
14:30	0	1	0	1	0	1	1	2	0	0	0	0	2	0	0	2	5	22		0	0	0	0	4	16
14:45	0	3	0	3	0	2	4	6	0	0	0	0	2	0	0	2	11	30		0	0	0	0	8	22
n/a																									
n/a																									
n/a																									
n/a																									
Total	2	14	1	**17**	2	13	12	**27**	0	1	0	**1**	9	1	5	**15**	60			0	0	0	0		37
Avg Hr	1	5	0	**6**	1	4	4	**9**	0	0	0	**0**	3	0	2	**5**	20			0	0	0	0		

Peak hour of the intersection

Pk Hr	2	4	0	6	1	5	3	9	0	1	0	1	2	1	2	5	21	*		0	0	0	0		13
15x4	8	8	0	8	4	8	8	12	0	4	0	4	4	4	4	12	28	+		0	0	0	0		32
PHF	0.25	0.50	n/a	**0.75**	0.25	0.63	0.38	**0.75**	n/a	0.25	n/a	**0.25**	0.50	0.25	0.50	**0.42**	0.75			n/a	n/a	n/a	n/a		0.41

Peak hour of conflicting volumes for the intersection

Pk Hr	0	8	0	8	0	6	8	14	0	0	0	0	7	0	1	8	30	*		0	0	0	0		21
15x4	0	12	0	12	0	8	16	24	0	0	0	0	12	0	4	12	44	+		0	0	0	0		36
PHF	n/a	0.67	n/a	**0.67**	n/a	0.75	0.50	**0.58**	n/a	n/a	n/a	**n/a**	0.58	n/a	0.25	**0.67**	0.68			n/a	n/a	n/a	n/a		0.58

MD Peak Hour Volumes

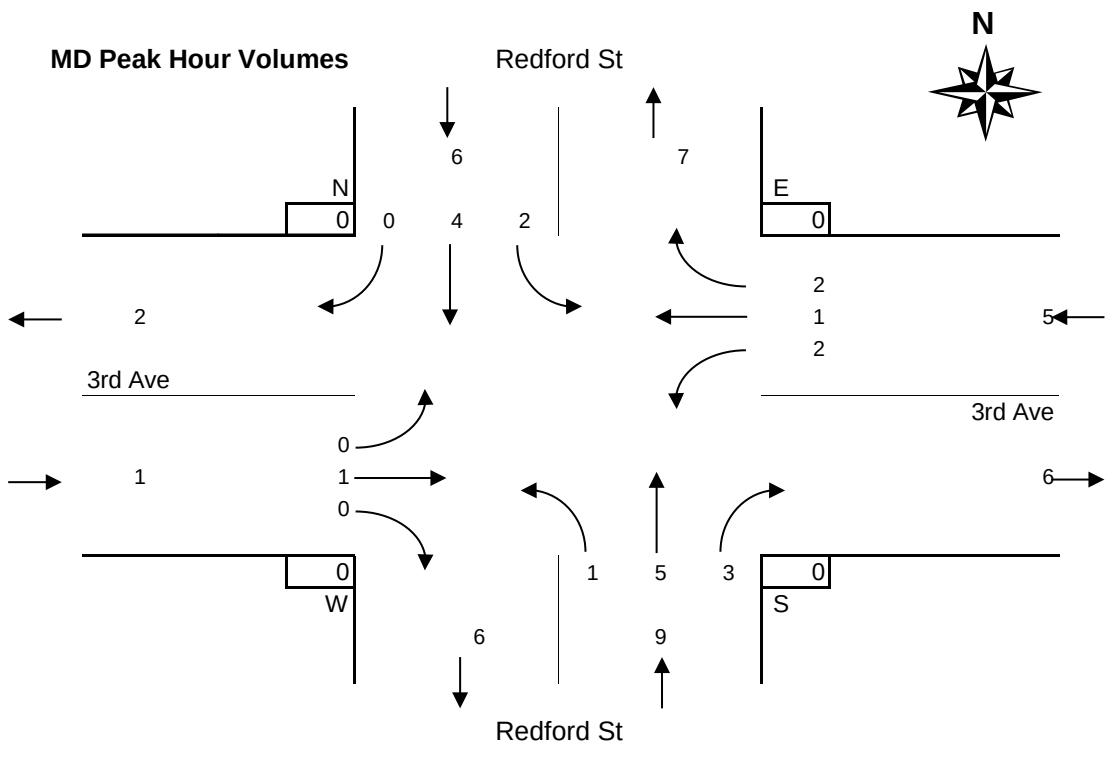

PM Peak Period
Utility Trucks

3rd Avenue @ Redford Street
Wednesday, September 27, 2017

Time Period Begins	Redford St NORTH Approach				Redford St SOUTH Approach				3rd Ave WEST Approach				3rd Ave EAST Approach				Total Volume		Peak					Conflict	
	Left	Thru	Right	Total	Left	Thru	Right	Total	Left	Thru	Right	Total	Left	Thru	Right	Total	15-min	Hour		N	S	W	E	15 min	Hr
n/a																									
n/a																									
n/a																									
n/a																									
n/a																									
n/a																									
n/a																									
n/a																									
n/a																									
n/a																									
n/a																									
n/a																									
n/a																									
n/a																									
n/a																									
n/a																									
n/a																									
n/a																									
n/a																									
Total																									0
Avg Hr																									

Peak hour of the intersection

Pk Hr																		*							0
15x4																		+							0
PHF																									n/a

Peak hour of conflicting volumes for the intersection

Pk Hr																		*							0
15x4																		+							0
PHF																									n/a

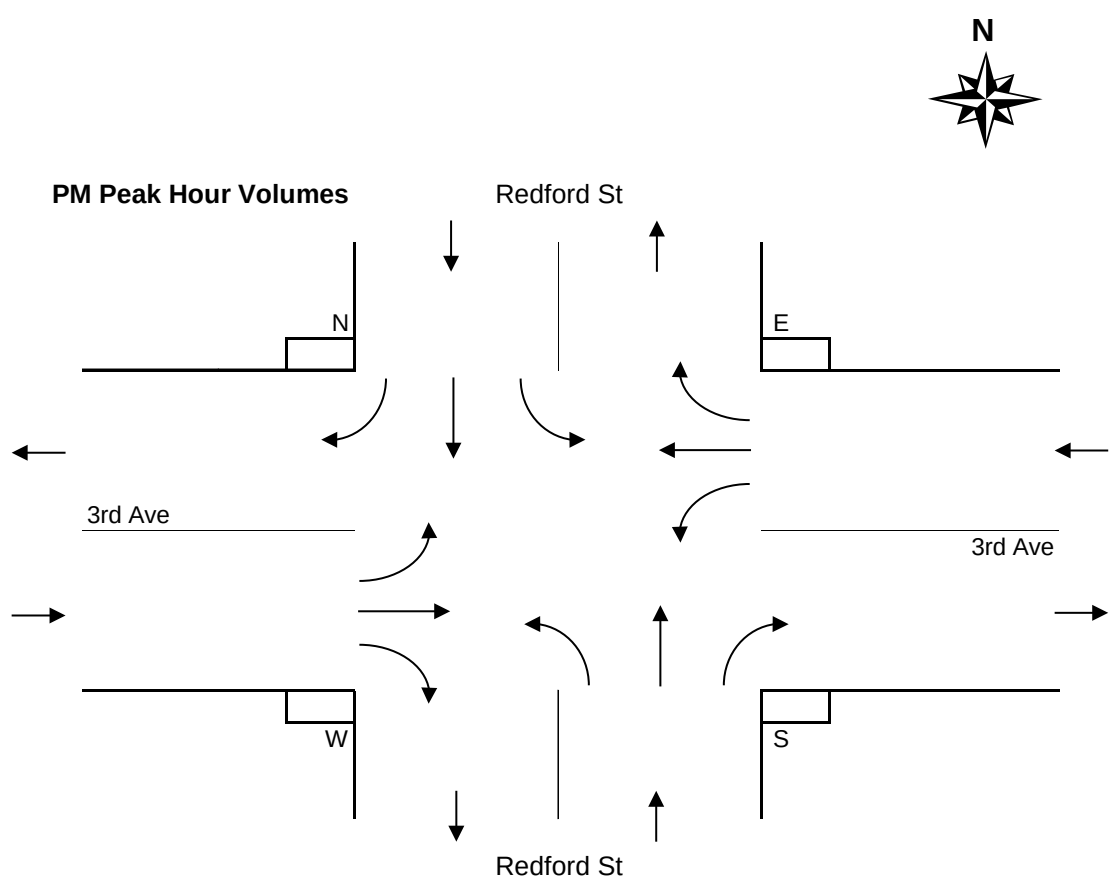

Period Hourly Averages
Utility Trucks

3rd Avenue @ Redford Street
Wednesday, September 27, 2017

Entire Survey Period
8 Hours

	Redford St				Redford St				3rd Ave				3rd Ave							
	NORTH Approach				SOUTH Approach				WEST Approach				EAST Approach				Total			
	Left	Thru	Right	Total	Left	Thru	Right	Total	Left	Thru	Right	Total	Left	Thru	Right	Total	Volume	N	S	W	E
Total	5	42	1	**48**	4	41	23	**68**	1	2	4	**7**	25	2	8	**35**	158	0	0	0	0
Avg Hr	1	5	0	**6**	1	5	3	**9**	0	0	1	**1**	3	0	1	**4**	20	0	0	0	0

AM Peak Period
5 Hours

	Redford St				Redford St				3rd Ave				3rd Ave							
	NORTH Approach				SOUTH Approach				WEST Approach				EAST Approach				Total			
Totals	Left	Thru	Right	Total	Left	Thru	Right	Total	Left	Thru	Right	Total	Left	Thru	Right	Total	Volume	N	S	W	E
Period	3	28	0	**31**	2	28	11	**41**	1	1	4	**6**	16	1	3	**20**	98	0	0	0	0
Avg Hr	1	6	0	**6**	0	6	2	**8**	0	0	1	**1**	3	0	1	**4**	20	0	0	0	0

MD Peak Period
3 Hours

	Redford St				Redford St				3rd Ave				3rd Ave							
	NORTH Approach				SOUTH Approach				WEST Approach				EAST Approach				Total			
Totals	Left	Thru	Right	Total	Left	Thru	Right	Total	Left	Thru	Right	Total	Left	Thru	Right	Total	Volume	N	S	W	E
Total	2	14	1	**17**	2	13	12	**27**	0	1	0	**1**	9	1	5	**15**	60	0	0	0	0
Avg Hr	1	5	0	**6**	1	4	4	**9**	0	0	0	**0**	3	0	2	**5**	20	0	0	0	0

PM Peak Period
Hours

	Redford St				Redford St				3rd Ave				3rd Ave							
	NORTH Approach				SOUTH Approach				WEST Approach				EAST Approach				Total			
Totals	Left	Thru	Right	Total	Left	Thru	Right	Total	Left	Thru	Right	Total	Left	Thru	Right	Total	Volume	N	S	W	E
Total																				
Avg Hr																				

Average Hour Volumes

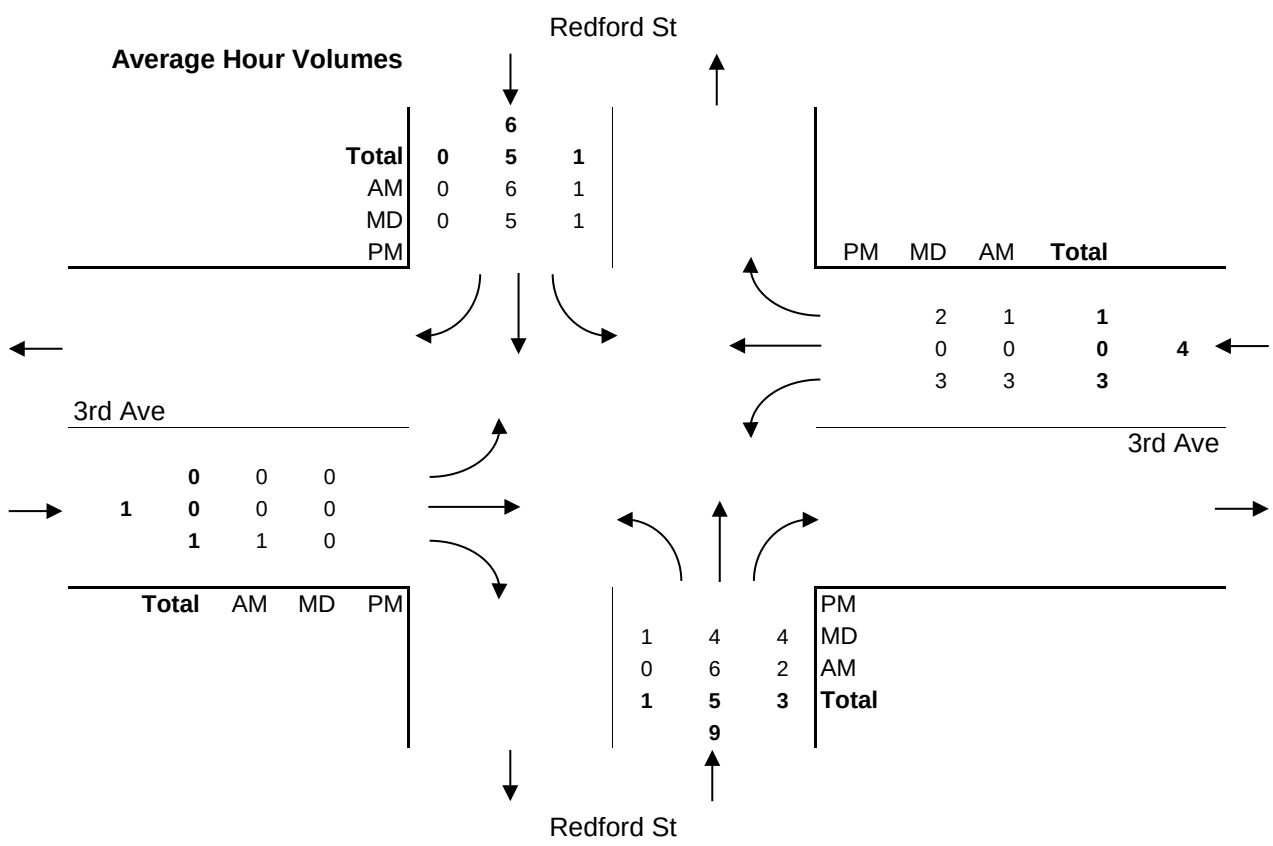

Vehicle Turning Movement Survey
With Classification

Major Route: 3rd Avenue
Minor Route: Redford Street
Municipality: Port Alberni
Filename: 1-3rd Ave @ Redford St-Sep 27, 2017.xlsx
Location #: 1

Date: September 27, 2017
Day-of-week: Wednesday

East/West Route: 3rd Avenue
Intersection Type: 4-leg
Signalized?: Yes
Weather: Clear and dry

Vehicle Classifications: Regular Vehicles
Buses
Articulated Trucks
Cube Trucks
Dump Trucks
Emergency Trucks
Garbage Trucks
Logging Trucks
RVs
Utility Trucks

This data is for All Vehicles Combined

Shift	Start	End	Duration
AM	7:00	12:00	5.00
MD	12:00	15:00	3.00
PM			
Total	**7:00**		**8.00**

Notes: 24-hour clock used for reporting (15-minute increments)
North Approach - southbound vehicles approaching intersection from the north
15x4 - 15 min volume (from maximum 15 minute period of movement/approach in peak hour period [*]) x 4
Pedestrians - N indicates pedestrians crossing north approach (east/west)

Comments:

Survey Data
All Vehicles Combined

3rd Avenue @ Redford Street
Wednesday, September 27, 2017

Time Period Begins	Redford St NORTH Approach				Redford St SOUTH Approach				3rd Ave WEST Approach				3rd Ave EAST Approach				Total Volume		Peak	Crosswalks			
	Left	Thru	Right	Total	Left	Thru	Right	Total	Left	Thru	Right	Total	Left	Thru	Right	Total	15-min	Hour		N	S	W	E
7:00	10	30	0	**40**	0	39	7	**46**	1	1	0	**2**	14	0	21	**35**	**123**			0	0	1	0
7:15	12	37	1	**50**	0	31	13	**44**	1	0	0	**1**	24	1	25	**50**	**145**			0	0	0	2
7:30	15	60	1	**76**	3	44	12	**59**	1	1	1	**3**	28	1	43	**72**	**210**			0	0	0	1
7:45	30	107	0	**137**	1	56	22	**79**	0	0	0	**0**	35	3	31	**69**	**285**	763		0	0	0	4
8:00	14	70	0	**84**	1	56	26	**83**	0	1	3	**4**	24	1	29	**54**	**225**	865		0	0	1	2
8:15	12	86	0	**98**	0	76	24	**100**	0	1	0	**1**	33	1	49	**83**	**282**	1002		0	0	1	3
8:30	23	104	0	**127**	1	76	24	**101**	1	0	1	**2**	25	1	55	**81**	**311**	1103		0	0	0	0
8:45	34	136	0	**170**	0	91	42	**133**	1	1	0	**2**	42	2	45	**89**	**394**	1212		0	0	0	1
9:00	11	83	0	**94**	0	77	30	**107**	0	2	0	**2**	33	0	33	**66**	**269**	1256		0	0	3	6
9:15	19	98	0	**117**	1	88	22	**111**	0	1	0	**1**	30	0	27	**57**	**286**	1260		0	0	0	2
9:30	16	88	3	**107**	0	78	36	**114**	1	0	0	**1**	32	2	39	**73**	**295**	1244		0	0	0	3
9:45	22	114	1	**137**	0	98	35	**133**	0	4	0	**4**	27	1	32	**60**	**334**	1184		0	2	1	7
10:00	10	81	0	**91**	1	104	41	**146**	1	0	1	**2**	51	1	26	**78**	**317**	1232		0	0	1	0
10:15	27	97	0	**124**	0	107	27	**134**	0	1	1	**2**	25	2	50	**77**	**337**	1283		0	1	0	1
10:30	20	98	2	**120**	0	80	36	**116**	0	1	2	**3**	37	2	34	**73**	**312**	1300		0	0	1	3
10:45	21	122	0	**143**	0	98	25	**123**	0	0	2	**2**	38	2	42	**82**	**350**	1316		0	0	0	3
11:00	18	108	0	**126**	0	131	38	**169**	1	4	0	**5**	25	3	32	**60**	**360**	1359	*	0	0	4	2
11:15	21	102	0	**123**	2	123	37	**162**	0	2	1	**3**	28	1	37	**66**	**354**	1376	*	0	0	0	3
11:30	26	111	1	**138**	0	101	46	**147**	1	3	1	**5**	37	4	43	**84**	**374**	1438	*	0	0	0	1
11:45	26	131	0	**157**	0	123	33	**156**	1	1	0	**2**	43	1	50	**94**	**409**	1497	+	0	0	0	2
Total	387	1863	9	**2259**	10	1677	576	**2263**	10	24	13	**47**	631	29	743	**1403**	**5972**			0	3	13	46
12:00	24	111	1	**136**	0	109	40	**149**	0	3	2	**5**	46	0	47	**93**	**383**			0	2	1	4
12:15	17	99	0	**116**	1	115	33	**149**	0	1	1	**2**	38	3	41	**82**	**349**			0	0	0	2
12:30	25	110	0	**135**	1	87	44	**132**	0	0	1	**1**	27	0	38	**65**	**333**			0	2	0	5
12:45	36	135	1	**172**	1	123	44	**168**	0	1	1	**2**	47	1	41	**89**	**431**	1496	+	0	0	1	2
13:00	24	133	0	**157**	0	134	40	**174**	0	1	0	**1**	34	3	41	**78**	**410**	1523	*	0	0	0	3
13:15	22	108	0	**130**	0	110	43	**153**	0	1	1	**2**	31	1	35	**67**	**352**	1526	*	0	0	0	1
13:30	18	122	0	**140**	1	106	53	**160**	0	4	0	**4**	35	0	40	**75**	**379**	1572	*	0	0	0	1
13:45	35	129	0	**164**	0	124	38	**162**	0	1	0	**1**	42	3	38	**83**	**410**	1551		0	0	1	2
14:00	20	93	0	**113**	2	123	29	**154**	0	2	2	**4**	38	0	51	**89**	**360**	1501		0	0	1	0
14:15	23	108	0	**131**	1	127	44	**172**	0	2	1	**3**	32	3	48	**83**	**389**	1538		0	0	0	0
14:30	27	123	0	**150**	0	116	51	**167**	0	3	0	**3**	26	1	40	**67**	**387**	1546		0	0	0	0
14:45	32	114	0	**146**	0	119	44	**163**	0	2	0	**2**	34	1	52	**87**	**398**	1534		0	0	0	0
n/a																							
n/a																							
n/a																							
n/a																							
Total	303	1385	2	**1690**	7	1393	503	**1903**	0	21	9	**30**	430	16	512	**958**	**4581**			0	4	4	20
n/a																							
n/a																							
n/a																							
n/a																							
n/a																							
n/a																							
n/a																							
n/a																							
n/a																							
n/a																							
n/a																							
n/a																							
n/a																							
n/a																							
n/a																							
n/a																							
n/a																							
n/a																							
Total																							

AM Peak Period
All Vehicles Combined

3rd Avenue @ Redford Street
Wednesday, September 27, 2017

Time Period Begins	Redford St NORTH Approach				Redford St SOUTH Approach				3rd Ave WEST Approach				3rd Ave EAST Approach				Total Volume		Peak	Crosswalks				Conflict	
	Left	Thru	Right	Total	Left	Thru	Right	Total	Left	Thru	Right	Total	Left	Thru	Right	Total	15-min	Hour		N	S	W	E	15 min	Hr
7:00	10	30	0	40	0	39	7	46	1	1	0	2	14	0	21	35	123			0	0	1	0	78	
7:15	12	37	1	50	0	31	13	44	1	0	0	1	24	1	25	50	145			0	0	0	2	83	
7:30	15	60	1	76	3	44	12	59	1	1	1	3	28	1	43	72	210			0	0	0	1	116	
7:45	30	107	0	137	1	56	22	79	0	0	0	0	35	3	31	69	285	763		0	0	0	4	143	420
8:00	14	70	0	84	1	56	26	83	0	1	3	4	24	1	29	54	225	865		0	0	1	2	126	468
8:15	12	86	0	98	0	76	24	100	0	1	0	1	33	1	49	83	282	1002		0	0	1	3	162	547
8:30	23	104	0	127	1	76	24	101	1	0	1	2	25	1	55	81	311	1103		0	0	0	0	180	611
8:45	34	136	0	170	0	91	42	133	1	1	0	2	42	2	45	89	394	1212		0	0	0	1	215	683
9:00	11	83	0	94	0	77	30	107	0	2	0	2	33	0	33	66	269	1256		0	0	3	6	153	710
9:15	19	98	0	117	1	88	22	111	0	1	0	1	30	0	27	57	286	1260		0	0	0	2	160	708
9:30	16	88	3	107	0	78	36	114	1	0	0	1	32	2	39	73	295	1244		0	0	0	3	172	700
9:45	22	114	1	137	0	98	35	133	0	4	0	4	27	1	32	60	334	1184		0	2	1	7	188	673
10:00	10	81	0	91	1	104	41	146	1	0	1	2	51	1	26	78	317	1232		0	0	1	0	207	727
10:15	27	97	0	124	0	107	27	134	0	1	1	2	25	2	50	77	337	1283		0	1	0	1	213	780
10:30	20	98	2	120	0	80	36	116	0	1	2	3	37	2	34	73	312	1300		0	0	1	3	176	784
10:45	21	122	0	143	0	98	25	123	0	0	2	2	38	2	42	82	350	1316		0	0	0	3	188	784
11:00	18	108	0	126	0	131	38	169	1	4	0	5	25	3	32	60	360	1359	*	0	0	4	2	223	800
11:15	21	102	0	123	2	123	37	162	0	2	1	3	28	1	37	66	354	1376	*	0	0	0	3	219	806
11:30	26	111	1	138	0	101	46	147	1	3	1	5	37	4	43	84	374	1438	*	0	0	0	1	221	851
11:45	26	131	0	157	0	123	33	156	1	1	0	2	43	1	50	94	409	1497	+	0	0	0	2	234	897
Total	387	1863	9	**2259**	10	1677	576	**2263**	10	24	13	**47**	631	29	743	**1403**	5972			0	3	13	46		3422
Avg Hr	77	373	2	**452**	2	335	115	**453**	2	5	3	**9**	126	6	149	**281**	1194			0	1	3	9		

Peak hour of the intersection

Pk Hr	91	452	1	544	2	478	154	634	3	10	2	15	133	9	162	304	1497	*		0	0	4	8		897
15x4	104	524	4	628	8	524	184	676	4	16	4	20	172	16	200	376	1636	+		0	0	16	12		1032
PHF	0.88	0.86	0.25	**0.87**	0.25	0.91	0.84	**0.94**	0.75	0.63	0.50	**0.75**	0.77	0.56	0.81	**0.81**	0.92			n/a	n/a	0.25	0.67		0.87

Peak hour of conflicting volumes for the intersection

Pk Hr	91	452	1	544	2	478	154	634	3	10	2	15	133	9	162	304	1497	*		0	0	4	8		897
15x4	104	524	4	628	8	524	184	676	4	16	4	20	172	16	200	376	1636	+		0	0	16	12		1032
PHF	0.88	0.86	0.25	**0.87**	0.25	0.91	0.84	**0.94**	0.75	0.63	0.50	**0.75**	0.77	0.56	0.81	**0.81**	0.92			n/a	n/a	0.25	0.67		0.87

** Calculated peak hour occurs during the first or last hour of shift and therefore may be invalid. **

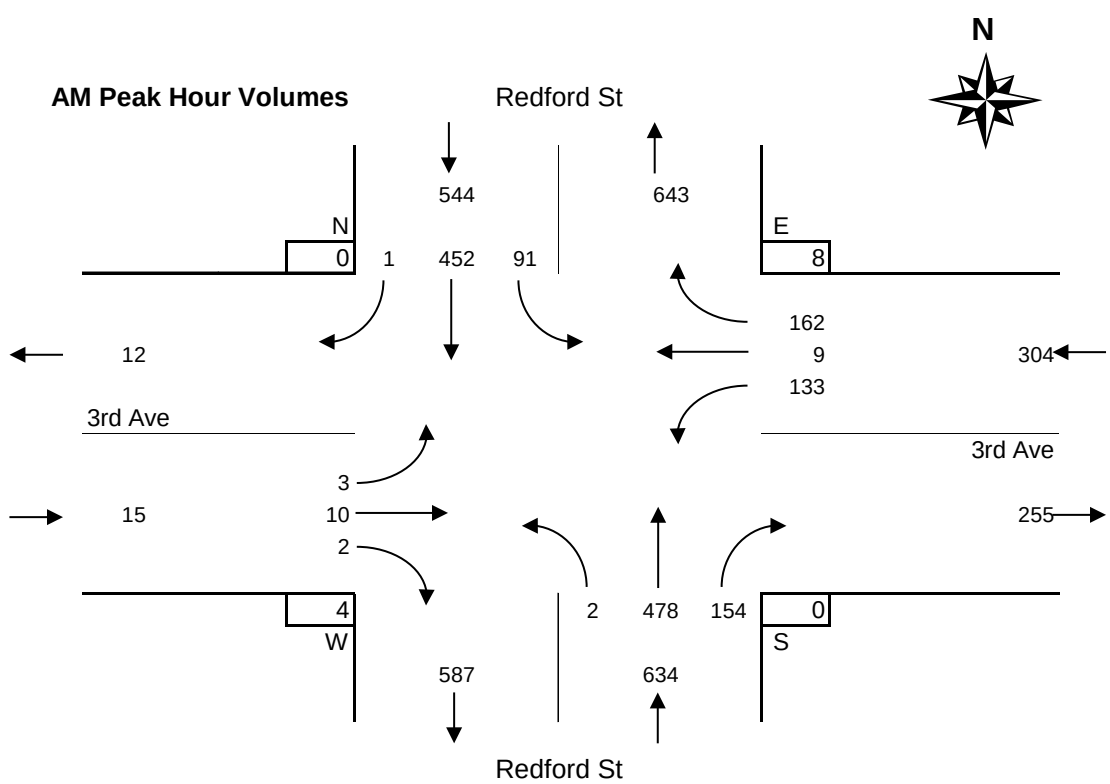

MD Peak Period
All Vehicles Combined

3rd Avenue @ Redford Street
Wednesday, September 27, 2017

Time Period Begins	Redford St NORTH Approach				Redford St SOUTH Approach				3rd Ave WEST Approach				3rd Ave EAST Approach				Total Volume		Peak	Crosswalks				Conflict	
	Left	Thru	Right	Total	Left	Thru	Right	Total	Left	Thru	Right	Total	Left	Thru	Right	Total	15-min	Hour		N	S	W	E	15 min	Hr
12:00	24	111	1	136	0	109	40	149	0	3	2	5	46	0	47	93	383			0	2	1	4	224	
12:15	17	99	0	116	1	115	33	149	0	1	1	2	38	3	41	82	349			0	0	0	2	209	
12:30	25	110	0	135	1	87	44	132	0	0	1	1	27	0	38	65	333			0	2	0	5	194	
12:45	36	135	1	172	1	123	44	168	0	1	1	2	47	1	41	89	431	1496	+	0	0	1	2	252	879
13:00	24	133	0	157	0	134	40	174	0	1	0	1	34	3	41	78	410	1523	*	0	0	0	3	242	897
13:15	22	108	0	130	0	110	43	153	0	1	1	2	31	1	35	67	352	1526	*	0	0	0	1	211	899
13:30	18	122	0	140	1	106	53	160	0	4	0	4	35	0	40	75	379	1572	*	0	0	0	1	217	922
13:45	35	129	0	164	0	124	38	162	0	1	0	1	42	3	38	83	410	1551		0	0	1	2	240	910
14:00	20	93	0	113	2	123	29	154	0	2	2	4	38	0	51	89	360	1501		0	0	1	0	223	891
14:15	23	108	0	131	1	127	44	172	0	2	1	3	32	3	48	83	389	1538		0	0	0	0	245	925
14:30	27	123	0	150	0	116	51	167	0	3	0	3	26	1	40	67	387	1546		0	0	0	0	235	943
14:45	32	114	0	146	0	119	44	163	0	2	0	2	34	1	52	87	398	1534		0	0	0	0	248	951
n/a																									
n/a																									
n/a																									
n/a																									
Total	303	1385	2	**1690**	7	1393	503	**1903**	0	21	9	**30**	430	16	512	**958**	4581			0	4	4	20		2727
Avg Hr	101	462	1	**563**	2	464	168	**634**	0	7	3	**10**	143	5	171	**319**	1527			0	1	1	7		

Peak hour of the intersection

Pk Hr	100	498	1	599	2	473	180	655	0	7	2	9	147	5	157	309	1572	*		0	0	1	7		915
15x4	144	540	4	688	4	536	212	696	0	16	4	16	188	12	164	356	1724	+		0	0	4	12		1100
PHF	0.69	0.92	0.25	**0.87**	0.50	0.88	0.85	**0.94**	n/a	0.44	0.50	**0.56**	0.78	0.42	0.96	**0.87**	0.91			n/a	n/a	0.25	0.58		0.83

Peak hour of conflicting volumes for the intersection

Pk Hr	102	438	0	540	3	485	168	656	0	9	3	12	130	5	191	326	1534	*		0	0	1	0		951
15x4	128	492	0	600	8	508	204	688	0	12	8	16	152	12	208	356	1592	+		0	0	4	0		1060
PHF	0.80	0.89	n/a	**0.90**	0.38	0.95	0.82	**0.95**	n/a	0.75	0.38	**0.75**	0.86	0.42	0.92	**0.92**	0.96			n/a	n/a	0.25	n/a		0.90

MD Peak Hour Volumes

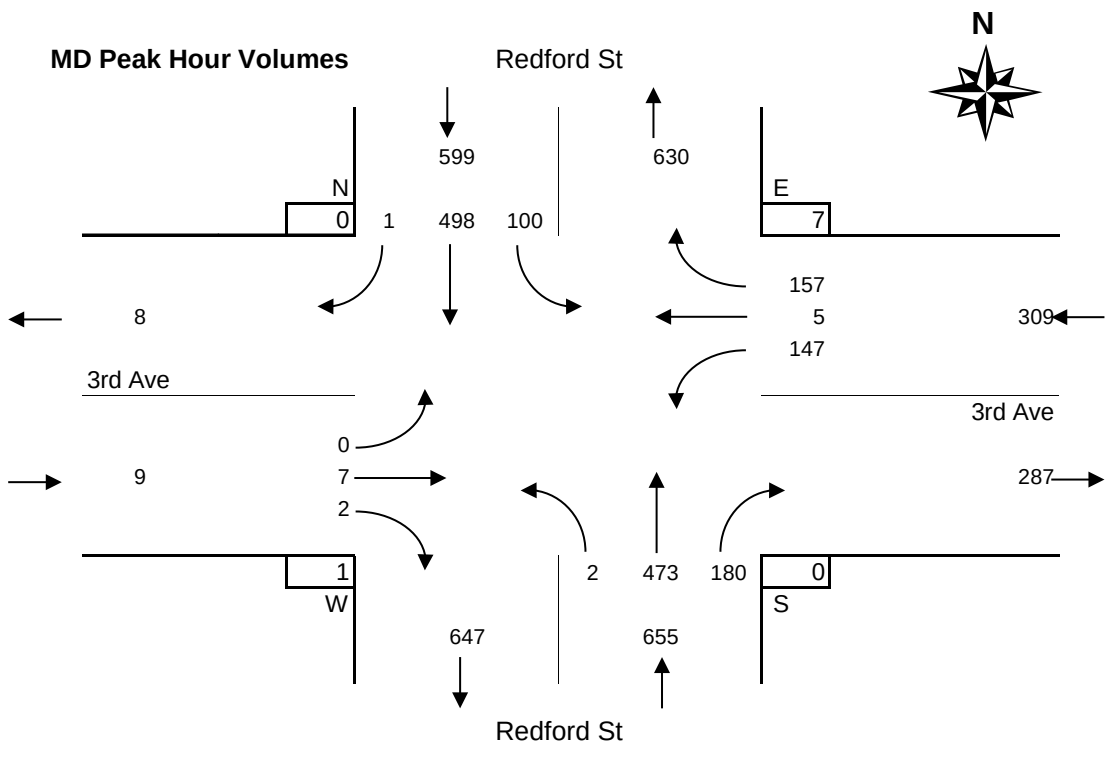

PM Peak Period
All Vehicles Combined

3rd Avenue @ Redford Street
Wednesday, September 27, 2017

Time Period Begins	Redford St NORTH Approach				Redford St SOUTH Approach				3rd Ave WEST Approach				3rd Ave EAST Approach				Total Volume		Peak	Crosswalks				Conflict	
	Left	Thru	Right	Total	Left	Thru	Right	Total	Left	Thru	Right	Total	Left	Thru	Right	Total	15-min	Hour		N	S	W	E	15 min	Hr
n/a																									
n/a																									
n/a																									
n/a																									
n/a																									
n/a																									
n/a																									
n/a																									
n/a																									
n/a																									
n/a																									
n/a																									
n/a																									
n/a																									
n/a																									
n/a																									
n/a																									
n/a																									
n/a																									
n/a																									

Total																									0
Avg Hr																									

Peak hour of the intersection

Pk Hr																		*							0
15x4																		+							0
PHF																									n/a

Peak hour of conflicting volumes for the intersection

Pk Hr																		*							0
15x4																		+							0
PHF																									n/a

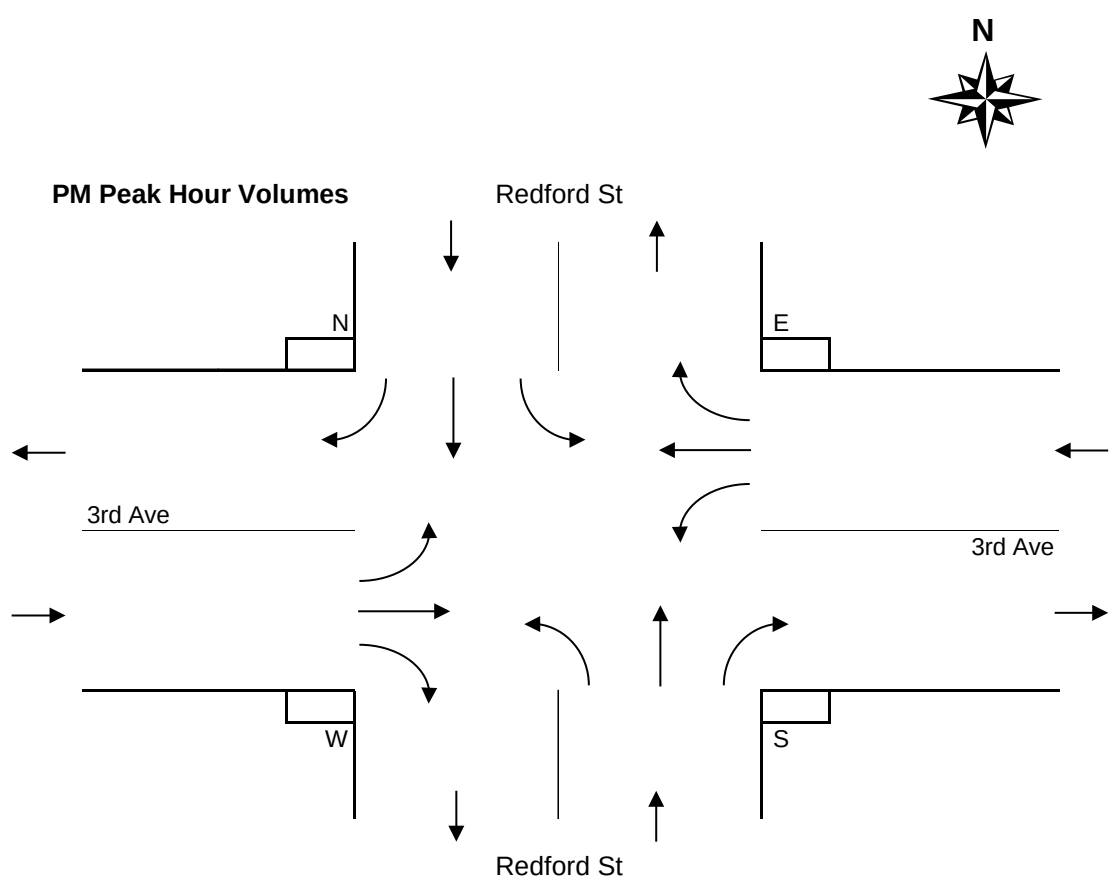

Period Hourly Averages
All Vehicles Combined

3rd Avenue @ Redford Street
Wednesday, September 27, 2017

Entire Survey Period
8 Hours

	Redford St				Redford St				3rd Ave				3rd Ave				Total
	NORTH Approach				SOUTH Approach				WEST Approach				EAST Approach				Volume
	Left	Thru	Right	Total	Left	Thru	Right	Total	Left	Thru	Right	Total	Left	Thru	Right	Total	
Total	690	3248	11	**3949**	17	3070	1079	**4166**	10	45	22	**77**	1061	45	1255	**2361**	10553
Avg Hr	86	406	1	**494**	2	384	135	**521**	1	6	3	**10**	133	6	157	**295**	1319

Crosswalks			
N	S	W	E
0	7	17	66
0	1	2	8

AM Peak Period
5 Hours

	Redford St				Redford St				3rd Ave				3rd Ave				Total
	NORTH Approach				SOUTH Approach				WEST Approach				EAST Approach				Volume
Totals	Left	Thru	Right	Total	Left	Thru	Right	Total	Left	Thru	Right	Total	Left	Thru	Right	Total	
Period	387	1863	9	**2259**	10	1677	576	**2263**	10	24	13	**47**	631	29	743	**1403**	5972
Avg Hr	77	373	2	**452**	2	335	115	**453**	2	5	3	**9**	126	6	149	**281**	1194

Crosswalks			
N	S	W	E
0	3	13	46
0	1	3	9

MD Peak Period
3 Hours

	Redford St				Redford St				3rd Ave				3rd Ave				Total
	NORTH Approach				SOUTH Approach				WEST Approach				EAST Approach				Volume
Totals	Left	Thru	Right	Total	Left	Thru	Right	Total	Left	Thru	Right	Total	Left	Thru	Right	Total	
Total	303	1385	2	**1690**	7	1393	503	**1903**	0	21	9	**30**	430	16	512	**958**	4581
Avg Hr	101	462	1	**563**	2	464	168	**634**	0	7	3	**10**	143	5	171	**319**	1527

Crosswalks			
N	S	W	E
0	4	4	20
0	1	1	7

PM Peak Period
Hours

	Redford St				Redford St				3rd Ave				3rd Ave				Total
	NORTH Approach				SOUTH Approach				WEST Approach				EAST Approach				Volume
Totals	Left	Thru	Right	Total	Left	Thru	Right	Total	Left	Thru	Right	Total	Left	Thru	Right	Total	
Total																	
Avg Hr																	

Crosswalks			
N	S	W	E

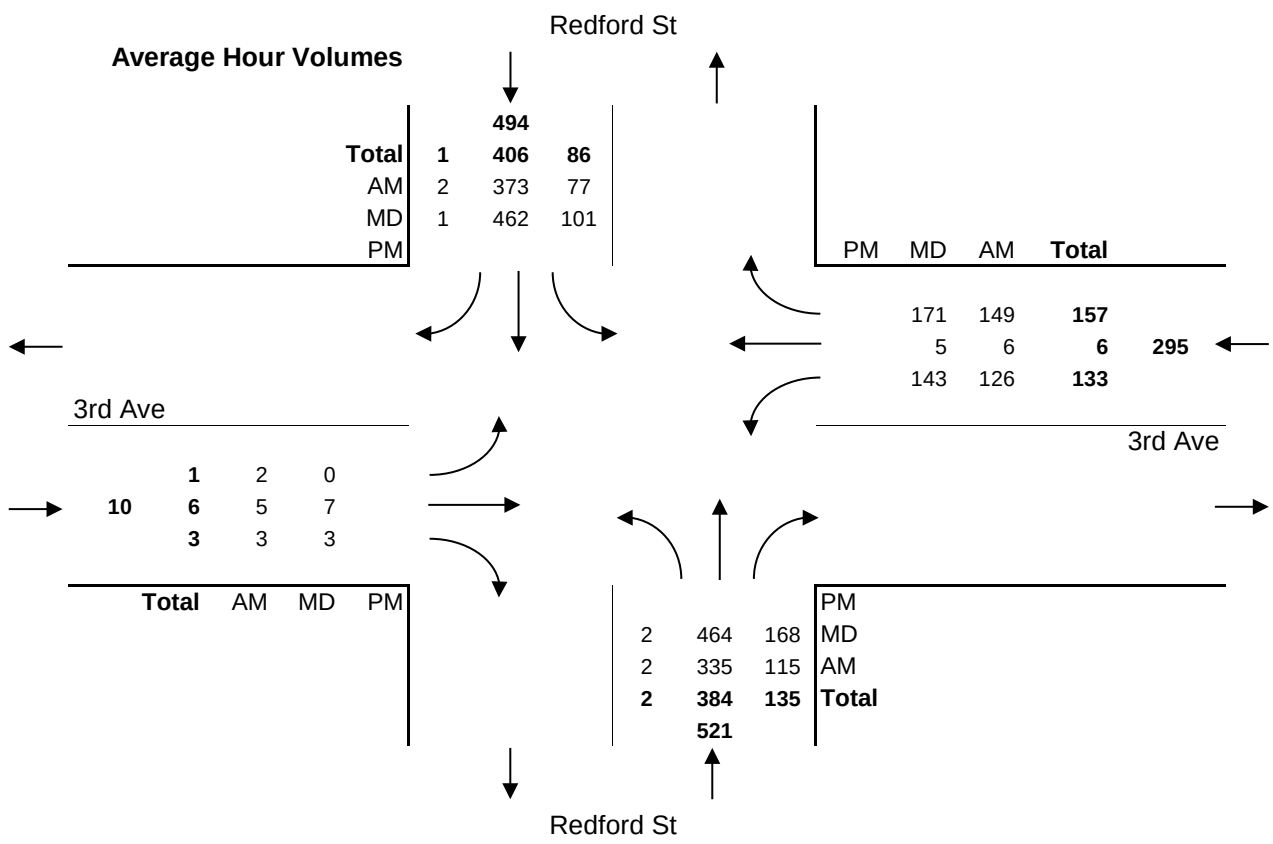

Data summarized for input into Synchro/HCS

All Vehicles Combined

AM

	EBL	EBT	EBR	WBL	WBT	WBR	NBL	NBT	NBR	SBL	SBT	SBR
Traffic Volume (vph)	3	10	2	133	9	162	2	478	154	91	452	1
Peak Hour Factor	0.75	0.63	0.50	0.77	0.56	0.81	0.25	0.91	0.84	0.88	0.86	0.25
Total Volume	10	24	13	631	29	743	10	1677	576	387	1863	9
% of Total Vehicles	100%	100%	100%	100%	100%	100%	100%	100%	100%	100%	100%	100%

MD

	EBL	EBT	EBR	WBL	WBT	WBR	NBL	NBT	NBR	SBL	SBT	SBR
Traffic Volume (vph)	0	7	2	147	5	157	2	473	180	100	498	1
Peak Hour Factor	n/a	0.44	0.50	0.78	0.42	0.96	0.50	0.88	0.85	0.69	0.92	0.25
Total Volume	0	21	9	430	16	512	7	1393	503	303	1385	2
% of Total Vehicles	n/a	100%	100%	100%	100%	100%	100%	100%	100%	100%	100%	100%

PM

	EBL	EBT	EBR	WBL	WBT	WBR	NBL	NBT	NBR	SBL	SBT	SBR
Traffic Volume (vph)												
Peak Hour Factor												
Total Volume												
% of Total Vehicles	n/a	n/a	n/a	n/a	n/a	n/a	n/a	n/a	n/a	n/a	n/a	n/a

Regular Vehicles

AM

	EBL	EBT	EBR	WBL	WBT	WBR	NBL	NBT	NBR	SBL	SBT	SBR
Traffic Volume (vph)	3	3	2	123	5	159	2	457	140	86	434	1
Peak Hour Factor	0.75	0.75	0.50	0.75	0.63	0.80	0.25	0.91	0.80	0.86	0.87	0.25
Total Volume	9	5	7	576	10	730	8	1583	516	371	1772	8
% of Total Vehicles	90%	21%	54%	91%	34%	98%	80%	94%	90%	96%	95%	89%

MD

	EBL	EBT	EBR	WBL	WBT	WBR	NBL	NBT	NBR	SBL	SBT	SBR
Traffic Volume (vph)	0	1	2	139	1	154	1	441	166	97	479	1
Peak Hour Factor	n/a	0.25	0.50	0.77	0.25	0.94	0.25	0.88	0.85	0.71	0.91	0.25
Total Volume	0	7	6	393	3	500	5	1321	462	296	1320	1
% of Total Vehicles	n/a	33%	67%	91%	19%	98%	71%	95%	92%	98%	95%	50%

PM

	EBL	EBT	EBR	WBL	WBT	WBR	NBL	NBT	NBR	SBL	SBT	SBR
Traffic Volume (vph)												
Peak Hour Factor												
Total Volume												
% of Total Vehicles	n/a	n/a	n/a	n/a	n/a	n/a	n/a	n/a	n/a	n/a	n/a	n/a

Buses

AM

	EBL	EBT	EBR	WBL	WBT	WBR	NBL	NBT	NBR	SBL	SBT	SBR
Traffic Volume (vph)	0	0	0	0	0	0	0	0	1	0	0	0
Peak Hour Factor	n/a	n/a	n/a	n/a	n/a	n/a	n/a	n/a	0.25	n/a	n/a	n/a
Total Volume	0	0	0	1	0	3	0	3	7	5	2	0
% of Total Vehicles	0%	0%	0%	0%	0%	0%	0%	0%	1%	1%	0%	0%

MD

	EBL	EBT	EBR	WBL	WBT	WBR	NBL	NBT	NBR	SBL	SBT	SBR
Traffic Volume (vph)	0	0	0	0	0	1	0	2	2	0	0	0
Peak Hour Factor	n/a	n/a	n/a	n/a	n/a	0.25	n/a	0.25	0.50	n/a	n/a	n/a
Total Volume	0	0	0	0	0	3	0	2	4	0	5	0
% of Total Vehicles	n/a	0%	0%	0%	0%	1%	0%	0%	1%	0%	0%	0%

PM

	EBL	EBT	EBR	WBL	WBT	WBR	NBL	NBT	NBR	SBL	SBT	SBR
Traffic Volume (vph)												
Peak Hour Factor												
Total Volume												
% of Total Vehicles	n/a	n/a	n/a	n/a	n/a	n/a	n/a	n/a	n/a	n/a	n/a	n/a

Articulated Trucks

AM

	EBL	EBT	EBR	WBL	WBT	WBR	NBL	NBT	NBR	SBL	SBT	SBR
Traffic Volume (vph)	0	6	0	4	3	0	0	2	6	0	4	0
Peak Hour Factor	n/a	0.75	n/a	0.50	0.38	n/a	n/a	0.50	0.50	n/a	0.50	n/a
Total Volume	0	18	1	29	18	1	0	11	27	3	10	0
% of Total Vehicles	0%	75%	8%	5%	62%	0%	0%	1%	5%	1%	1%	0%

MD

	EBL	EBT	EBR	WBL	WBT	WBR	NBL	NBT	NBR	SBL	SBT	SBR
Traffic Volume (vph)	0	5	0	5	3	0	0	2	7	0	3	0
Peak Hour Factor	n/a	0.63	n/a	0.63	0.38	n/a	n/a	0.50	0.58	n/a	0.38	n/a
Total Volume	0	13	3	22	12	1	0	7	15	1	9	0
% of Total Vehicles	n/a	62%	33%	5%	75%	0%	0%	1%	3%	0%	1%	0%

PM

	EBL	EBT	EBR	WBL	WBT	WBR	NBL	NBT	NBR	SBL	SBT	SBR
Traffic Volume (vph)												
Peak Hour Factor												
Total Volume												
% of Total Vehicles	n/a	n/a	n/a	n/a	n/a	n/a	n/a	n/a	n/a	n/a	n/a	n/a

Cube Trucks

AM

	EBL	EBT	EBR	WBL	WBT	WBR	NBL	NBT	NBR	SBL	SBT	SBR
Traffic Volume (vph)	0	0	0	2	0	2	0	4	3	1	4	0

Peak Hour Factor	n/a	n/a	n/a	0.25	n/a	0.50	n/a	0.50	0.38	0.25	0.50	n/a
Total Volume	0	0	1	7	0	4	0	10	12	2	16	1
% of Total Vehicles	0%	0%	8%	1%	0%	1%	0%	1%	2%	1%	1%	11%

MD

	EBL	EBT	EBR	WBL	WBT	WBR	NBL	NBT	NBR	SBL	SBT	SBR
Traffic Volume (vph)	0	0	0	1	0	0	0	12	2	0	5	0
Peak Hour Factor	n/a	n/a	n/a	0.25	n/a	n/a	n/a	0.75	0.25	n/a	0.42	n/a
Total Volume	0	0	0	4	0	1	0	19	6	1	18	0
% of Total Vehicles	n/a	0%	0%	1%	0%	0%	0%	1%	1%	0%	1%	0%

PM

	EBL	EBT	EBR	WBL	WBT	WBR	NBL	NBT	NBR	SBL	SBT	SBR
Traffic Volume (vph)												
Peak Hour Factor												
Total Volume												
% of Total Vehicles	n/a	n/a	n/a	n/a	n/a	n/a	n/a	n/a	n/a	n/a	n/a	n/a

Dump Trucks

AM

	EBL	EBT	EBR	WBL	WBT	WBR	NBL	NBT	NBR	SBL	SBT	SBR
Traffic Volume (vph)	0	0	0	0	0	0	0	3	1	0	1	0
Peak Hour Factor	n/a	n/a	n/a	n/a	n/a	n/a	n/a	0.75	0.25	n/a	0.25	n/a
Total Volume	0	0	0	0	0	1	0	16	2	1	12	0
% of Total Vehicles	0%	0%	0%	0%	0%	0%	0%	1%	0%	0%	1%	0%

MD

	EBL	EBT	EBR	WBL	WBT	WBR	NBL	NBT	NBR	SBL	SBT	SBR
Traffic Volume (vph)	0	0	0	0	0	0	0	7	0	1	1	0
Peak Hour Factor	n/a	n/a	n/a	n/a	n/a	n/a	n/a	0.88	n/a	0.25	0.25	n/a
Total Volume	0	0	0	1	0	1	0	14	1	2	7	0
% of Total Vehicles	n/a	0%	0%	0%	0%	0%	0%	1%	0%	1%	1%	0%

PM

	EBL	EBT	EBR	WBL	WBT	WBR	NBL	NBT	NBR	SBL	SBT	SBR
Traffic Volume (vph)												
Peak Hour Factor												
Total Volume												
% of Total Vehicles	n/a	n/a	n/a	n/a	n/a	n/a	n/a	n/a	n/a	n/a	n/a	n/a

Emergency Trucks

AM

	EBL	EBT	EBR	WBL	WBT	WBR	NBL	NBT	NBR	SBL	SBT	SBR
Traffic Volume (vph)	0	0	0	0	0	0	0	0	0	0	1	0
Peak Hour Factor	n/a	n/a	n/a	n/a	n/a	n/a	n/a	n/a	n/a	n/a	0.25	n/a
Total Volume	0	0	0	0	0	1	0	0	0	0	1	0
% of Total Vehicles	0%	0%	0%	0%	0%	0%	0%	0%	0%	0%	0%	0%

MD

	EBL	EBT	EBR	WBL	WBT	WBR	NBL	NBT	NBR	SBL	SBT	SBR
Traffic Volume (vph)	0	0	0	0	0	0	0	0	0	0	0	0
Peak Hour Factor	n/a	n/a	n/a	n/a	n/a	n/a	n/a	n/a	n/a	n/a	n/a	n/a
Total Volume	0	0	0	0	0	0	0	0	1	0	0	0
% of Total Vehicles	n/a	0%	0%	0%	0%	0%	0%	0%	0%	0%	0%	0%

PM

	EBL	EBT	EBR	WBL	WBT	WBR	NBL	NBT	NBR	SBL	SBT	SBR
Traffic Volume (vph)												
Peak Hour Factor												
Total Volume												
% of Total Vehicles	n/a	n/a	n/a	n/a	n/a	n/a	n/a	n/a	n/a	n/a	n/a	n/a

Garbage Trucks

AM

	EBL	EBT	EBR	WBL	WBT	WBR	NBL	NBT	NBR	SBL	SBT	SBR
Traffic Volume (vph)	0	0	0	0	0	0	0	0	0	1	0	0
Peak Hour Factor	n/a	n/a	n/a	n/a	n/a	n/a	n/a	n/a	n/a	0.25	n/a	n/a
Total Volume	0	0	0	1	0	0	0	1	0	1	0	0
% of Total Vehicles	0%	0%	0%	0%	0%	0%	0%	0%	0%	0%	0%	0%

MD

	EBL	EBT	EBR	WBL	WBT	WBR	NBL	NBT	NBR	SBL	SBT	SBR
Traffic Volume (vph)	0	0	0	0	0	0	0	0	0	0	0	0
Peak Hour Factor	n/a	n/a	n/a	n/a	n/a	n/a	n/a	n/a	n/a	n/a	n/a	n/a
Total Volume	0	0	0	0	0	0	0	0	0	0	0	0
% of Total Vehicles	n/a	0%	0%	0%	0%	0%	0%	0%	0%	0%	0%	0%

PM

	EBL	EBT	EBR	WBL	WBT	WBR	NBL	NBT	NBR	SBL	SBT	SBR
Traffic Volume (vph)												
Peak Hour Factor												
Total Volume												
% of Total Vehicles	n/a	n/a	n/a	n/a	n/a	n/a	n/a	n/a	n/a	n/a	n/a	n/a

Logging Trucks

AM

	EBL	EBT	EBR	WBL	WBT	WBR	NBL	NBT	NBR	SBL	SBT	SBR
Traffic Volume (vph)	0	0	0	1	0	0	0	4	0	0	3	0
Peak Hour Factor	n/a	n/a	n/a	0.25	n/a	n/a	n/a	0.50	n/a	n/a	0.75	n/a
Total Volume	0	0	0	1	0	0	0	21	1	0	20	0
% of Total Vehicles	0%	0%	0%	0%	0%	0%	0%	1%	0%	0%	1%	0%

MD

	EBL	EBT	EBR	WBL	WBT	WBR	NBL	NBT	NBR	SBL	SBT	SBR
Traffic Volume (vph)	0	0	0	0	0	0	0	4	0	0	4	0
Peak Hour Factor	n/a	n/a	n/a	n/a	n/a	n/a	n/a	0.33	n/a	n/a	0.50	n/a

Total Volume	0	0	0	0	0	0	0	13	2	1	9	0
% of Total Vehicles	n/a	0%	0%	0%	0%	0%	0%	1%	0%	0%	1%	0%

PM

	EBL	EBT	EBR	WBL	WBT	WBR	NBL	NBT	NBR	SBL	SBT	SBR
Traffic Volume (vph)												
Peak Hour Factor												
Total Volume												
% of Total Vehicles	n/a	n/a	n/a	n/a	n/a	n/a	n/a	n/a	n/a	n/a	n/a	n/a

RVs

AM

	EBL	EBT	EBR	WBL	WBT	WBR	NBL	NBT	NBR	SBL	SBT	SBR
Traffic Volume (vph)	0	0	0	0	0	0	0	1	0	1	1	0
Peak Hour Factor	n/a	n/a	n/a	n/a	n/a	n/a	n/a	0.25	n/a	0.25	0.25	n/a
Total Volume	0	0	0	0	0	0	0	4	0	1	2	0
% of Total Vehicles	0%	0%	0%	0%	0%	0%	0%	0%	0%	0%	0%	0%

MD

	EBL	EBT	EBR	WBL	WBT	WBR	NBL	NBT	NBR	SBL	SBT	SBR
Traffic Volume (vph)	0	0	0	0	0	0	0	0	0	0	2	0
Peak Hour Factor	n/a	n/a	n/a	n/a	n/a	n/a	n/a	n/a	n/a	n/a	0.25	n/a
Total Volume	0	0	0	1	0	1	0	4	0	0	3	0
% of Total Vehicles	n/a	0%	0%	0%	0%	0%	0%	0%	0%	0%	0%	0%

PM

	EBL	EBT	EBR	WBL	WBT	WBR	NBL	NBT	NBR	SBL	SBT	SBR
Traffic Volume (vph)												
Peak Hour Factor												
Total Volume												
% of Total Vehicles	n/a	n/a	n/a	n/a	n/a	n/a	n/a	n/a	n/a	n/a	n/a	n/a

Utility Trucks

AM

	EBL	EBT	EBR	WBL	WBT	WBR	NBL	NBT	NBR	SBL	SBT	SBR
Traffic Volume (vph)	0	1	0	3	1	1	0	7	3	2	4	0
Peak Hour Factor	n/a	0.25	n/a	0.38	0.25	0.25	n/a	0.58	0.38	0.50	0.50	n/a
Total Volume	1	1	4	16	1	3	2	28	11	3	28	0
% of Total Vehicles	10%	4%	31%	3%	3%	0%	20%	2%	2%	1%	2%	0%

MD

	EBL	EBT	EBR	WBL	WBT	WBR	NBL	NBT	NBR	SBL	SBT	SBR
Traffic Volume (vph)	0	1	0	2	1	2	1	5	3	2	4	0
Peak Hour Factor	n/a	0.25	n/a	0.50	0.25	0.50	0.25	0.63	0.38	0.25	0.50	n/a
Total Volume	0	1	0	9	1	5	2	13	12	2	14	1
% of Total Vehicles	n/a	5%	0%	2%	6%	1%	29%	1%	2%	1%	1%	50%

PM

	EBL	EBT	EBR	WBL	WBT	WBR	NBL	NBT	NBR	SBL	SBT	SBR
Traffic Volume (vph)												
Peak Hour Factor												
Total Volume												
% of Total Vehicles	n/a	n/a	n/a	n/a	n/a	n/a	n/a	n/a	n/a	n/a	n/a	n/a