Vehicle Turning Movement Survey
With Classification

Major Route: 3rd Avenue
Minor Route: Redford Street
Municipality: Port Alberni
Filename: 1-3rd Ave @ Redford St-Sep 26, 2017.xlsx
Location #: 1

Date: September 26, 2017
Day-of-week: Tuesday

East/West Route: 3rd Avenue
Intersection Type: 4-leg
Signalized?: Yes
Weather: Clear and dry

Vehicle Classifications: Regular Vehicles
Buses
Articulated Trucks
Cube Trucks
Dump Trucks
Emergency Trucks
Garbage Trucks
Logging Trucks
RVs
Utility Trucks

This data is for Regular Vehicles

Shift	Start	End	Duration
AM	7:00	12:00	5.00
MD	12:00	15:00	3.00
PM			
Total	**7:00**		**8.00**

Notes: 24-hour clock used for reporting (15-minute increments)
North Approach - southbound vehicles approaching intersection from the north
15x4 - 15 min volume (from maximum 15 minute period of movement/approach in peak hour period [*]) x 4
Pedestrians - N indicates pedestrians crossing north approach (east/west)

Comments:

Survey Data
Regular Vehicles

3rd Avenue @ Redford Street
Tuesday, September 26, 2017

Time Period Begins	Redford St NORTH Approach				Redford St SOUTH Approach				3rd Ave WEST Approach				3rd Ave EAST Approach				Total Volume		Peak	Crosswalks			
	Left	Thru	Right	Total	Left	Thru	Right	Total	Left	Thru	Right	Total	Left	Thru	Right	Total	15-min	Hour		N	S	W	E
7:00	6	24	1	**31**	0	23	5	**28**	0	0	0	**0**	7	1	17	**25**	**84**			0	0	0	1
7:15	15	32	2	**49**	1	29	13	**43**	0	1	0	**1**	22	0	27	**49**	**142**			0	0	0	1
7:30	7	66	1	**74**	0	48	11	**59**	1	0	0	**1**	34	1	39	**74**	**208**			0	0	0	2
7:45	31	96	0	**127**	0	51	13	**64**	2	0	0	**2**	18	1	37	**56**	**249**	683		0	0	0	3
8:00	13	66	0	**79**	1	59	14	**74**	0	0	0	**0**	23	0	25	**48**	**201**	800		0	0	1	2
8:15	15	105	0	**120**	0	60	23	**83**	0	0	0	**0**	19	1	39	**59**	**262**	920		0	0	0	1
8:30	28	82	1	**111**	1	77	21	**99**	0	0	1	**1**	19	1	51	**71**	**282**	994		0	0	0	2
8:45	24	113	0	**137**	1	70	17	**88**	0	1	2	**3**	28	1	39	**68**	**296**	1041		0	1	0	3
9:00	22	80	1	**103**	0	74	17	**91**	0	0	2	**2**	32	0	24	**56**	**252**	1092		0	0	0	0
9:15	10	98	1	**109**	1	67	24	**92**	0	0	0	**0**	32	0	22	**54**	**255**	1085		0	0	0	4
9:30	17	82	1	**100**	0	71	22	**93**	0	0	3	**3**	24	0	32	**56**	**252**	1055		0	0	0	0
9:45	26	105	0	**131**	0	85	31	**116**	0	0	0	**0**	25	0	30	**55**	**302**	1061		0	0	0	0
10:00	16	98	2	**116**	0	102	23	**125**	1	1	0	**2**	19	0	39	**58**	**301**	1110		0	0	0	8
10:15	20	107	0	**127**	0	91	30	**121**	0	0	0	**0**	28	1	32	**61**	**309**	1164		0	0	0	2
10:30	22	98	1	**121**	0	99	31	**130**	0	0	0	**0**	15	1	30	**46**	**297**	1209		0	0	1	2
10:45	20	99	0	**119**	0	96	38	**134**	1	0	0	**1**	27	0	41	**68**	**322**	1229		0	1	0	2
11:00	16	99	0	**115**	1	97	36	**134**	1	1	0	**2**	27	1	34	**62**	**313**	1241	*	0	0	0	1
11:15	19	110	2	**131**	0	90	28	**118**	1	0	0	**1**	32	0	34	**66**	**316**	1248	*	0	0	0	2
11:30	22	100	0	**122**	0	107	40	**147**	1	3	0	**4**	25	0	37	**62**	**335**	1286	*	0	1	1	2
11:45	21	108	0	**129**	0	117	31	**148**	0	1	0	**1**	39	2	42	**83**	**361**	1325	+	0	1	0	2
Total	370	1768	13	**2151**	6	1513	468	**1987**	8	8	8	**24**	495	11	671	**1177**	**5339**			0	4	3	40
12:00	20	112	0	**132**	1	104	39	**144**	0	0	1	**1**	32	0	44	**76**	**353**			0	0	0	3
12:15	26	122	2	**150**	0	98	33	**131**	0	0	0	**0**	39	2	28	**69**	**350**			0	0	0	4
12:30	21	91	0	**112**	0	90	32	**122**	0	0	0	**0**	28	0	43	**71**	**305**			0	2	0	3
12:45	30	140	2	**172**	0	98	34	**132**	0	0	1	**1**	25	0	40	**65**	**370**	1378		0	1	3	4
13:00	24	108	1	**133**	0	120	38	**158**	1	0	2	**3**	41	0	45	**86**	**380**	1405		1	1	1	2
13:15	24	111	0	**135**	2	112	43	**157**	0	0	1	**1**	32	0	36	**68**	**361**	1416		0	0	1	0
13:30	25	94	1	**120**	0	92	32	**124**	1	1	1	**3**	23	0	30	**53**	**300**	1411		0	0	2	1
13:45	21	125	0	**146**	0	107	25	**132**	0	0	1	**1**	28	0	52	**80**	**359**	1400		0	1	0	1
14:00	20	93	2	**115**	0	129	34	**163**	0	2	0	**2**	33	0	44	**77**	**357**	1377	*	0	2	0	2
14:15	25	96	0	**121**	1	133	37	**171**	1	2	1	**4**	22	0	53	**75**	**371**	1387	+	0	1	1	2
14:30	28	116	0	**144**	0	108	45	**153**	1	0	1	**2**	29	1	39	**69**	**368**	1455	*	0	0	3	0
14:45	32	98	1	**131**	0	108	44	**152**	0	0	1	**1**	32	0	55	**87**	**371**	1467	*	0	0	0	1
n/a																							
n/a																							
n/a																							
n/a																							
Total	296	1306	9	**1611**	4	1299	436	**1739**	4	5	10	**19**	364	3	509	**876**	**4245**			1	8	11	23
n/a																							
n/a																							
n/a																							
n/a																							
n/a																							
n/a																							
n/a																							
n/a																							
n/a																							
n/a																							
n/a																							
n/a																							
n/a																							
n/a																							
n/a																							
n/a																							
n/a																							
n/a																							
Total																							

AM Peak Period
Regular Vehicles

3rd Avenue @ Redford Street
Tuesday, September 26, 2017

Time Period Begins	Redford St NORTH Approach				Redford St SOUTH Approach				3rd Ave WEST Approach				3rd Ave EAST Approach				Total Volume		Peak	Crosswalks				Conflict	
	Left	Thru	Right	Total	Left	Thru	Right	Total	Left	Thru	Right	Total	Left	Thru	Right	Total	15-min	Hour		N	S	W	E	15 min	Hr
7:00	6	24	1	31	0	23	5	28	0	0	0	0	7	1	17	25	84			0	0	0	1	52	
7:15	15	32	2	49	1	29	13	43	0	1	0	1	22	0	27	49	142			0	0	0	1	84	
7:30	7	66	1	74	0	48	11	59	1	0	0	1	34	1	39	74	208			0	0	0	2	108	
7:45	31	96	0	127	0	51	13	64	2	0	0	2	18	1	37	56	249	683		0	0	0	3	136	380
8:00	13	66	0	79	1	59	14	74	0	0	0	0	23	0	25	48	201	800		0	0	1	2	111	439
8:15	15	105	0	120	0	60	23	83	0	0	0	0	19	1	39	59	262	920		0	0	0	1	145	500
8:30	28	82	1	111	1	77	21	99	0	0	1	1	19	1	51	71	282	994		0	0	0	2	178	570
8:45	24	113	0	137	1	70	17	88	0	1	2	3	28	1	39	68	296	1041		0	1	0	3	154	588
9:00	22	80	1	103	0	74	17	91	0	0	2	2	32	0	24	56	252	1092		0	0	0	0	147	624
9:15	10	98	1	109	1	67	24	92	0	0	0	0	32	0	22	54	255	1085		0	0	0	4	133	612
9:30	17	82	1	100	0	71	22	93	0	0	3	3	24	0	32	56	252	1055		0	0	0	0	142	576
9:45	26	105	0	131	0	85	31	116	0	0	0	0	25	0	30	55	302	1061		0	0	0	0	172	594
10:00	16	98	2	116	0	102	23	125	1	1	0	2	19	0	39	58	301	1110		0	0	0	8	181	628
10:15	20	107	0	127	0	91	30	121	0	0	0	0	28	1	32	61	309	1164		0	0	0	2	174	669
10:30	22	98	1	121	0	99	31	130	0	0	0	0	15	1	30	46	297	1209		0	0	1	2	183	710
10:45	20	99	0	119	0	96	38	134	1	0	0	1	27	0	41	68	322	1229		0	1	0	2	196	734
11:00	16	99	0	115	1	97	36	134	1	1	0	2	27	1	34	62	313	1241	*	0	0	0	1	185	738
11:15	19	110	2	131	0	90	28	118	1	0	0	1	32	0	34	66	316	1248	*	0	0	0	2	172	736
11:30	22	100	0	122	0	107	40	147	1	3	0	4	25	0	37	62	335	1286	*	0	1	1	2	207	760
11:45	21	108	0	129	0	117	31	148	0	1	0	1	39	2	42	83	361	1325	+	0	1	0	2	213	777
Total	370	1768	13	**2151**	6	1513	468	**1987**	8	8	8	**24**	495	11	671	**1177**	5339			0	4	3	40		3041
Avg Hr	74	354	3	**430**	1	303	94	**397**	2	2	2	**5**	99	2	134	**235**	1068			0	1	1	8		

Peak hour of the intersection

Pk Hr	78	417	2	497	1	411	135	547	3	5	0	8	123	3	147	273	1325	*		0	2	1	7		777
15x4	88	440	8	524	4	468	160	592	4	12	0	16	156	8	168	332	1444	+		0	4	4	8		896
PHF	0.89	0.95	0.25	**0.95**	0.25	0.88	0.84	**0.92**	0.75	0.42	n/a	**0.50**	0.79	0.38	0.88	**0.82**	0.92			n/a	0.50	0.25	0.88		0.87

Peak hour of conflicting volumes for the intersection

Pk Hr	78	417	2	497	1	411	135	547	3	5	0	8	123	3	147	273	1325	*		0	2	1	7		777
15x4	88	440	8	524	4	468	160	592	4	12	0	16	156	8	168	332	1444	+		0	4	4	8		896
PHF	0.89	0.95	0.25	**0.95**	0.25	0.88	0.84	**0.92**	0.75	0.42	n/a	**0.50**	0.79	0.38	0.88	**0.82**	0.92			n/a	0.50	0.25	0.88		0.87

** Calculated peak hour occurs during the first or last hour of shift and therefore may be invalid. **

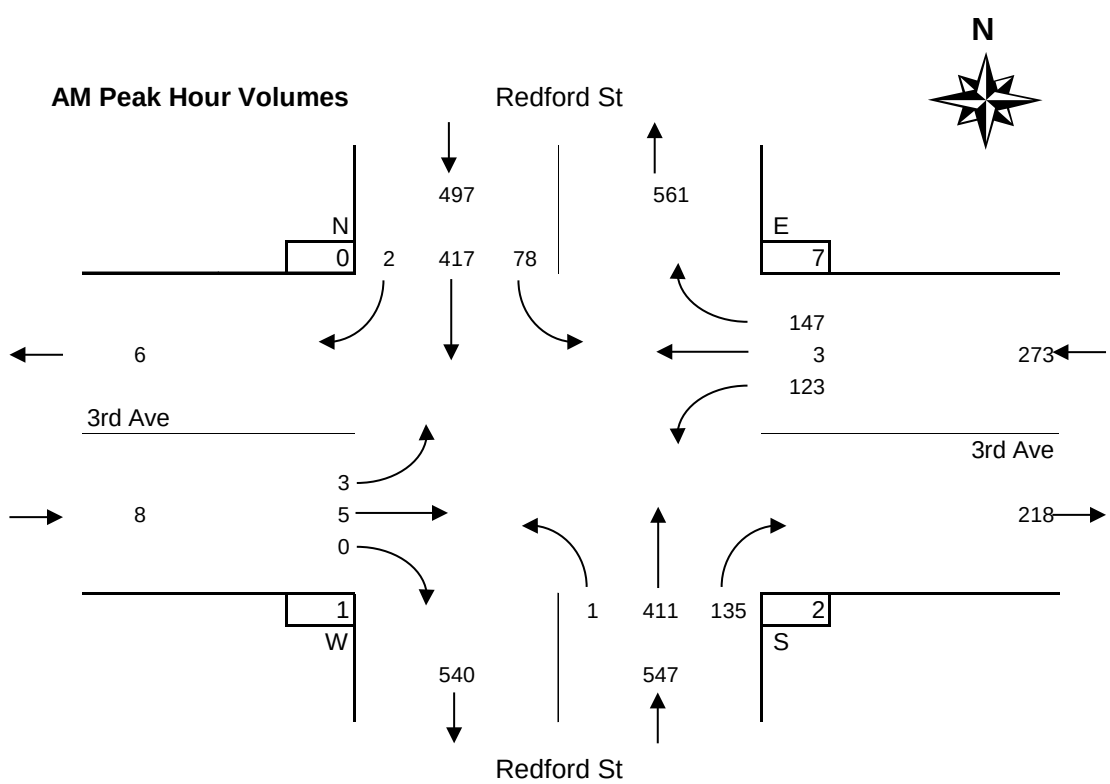

MD Peak Period
Regular Vehicles

3rd Avenue @ Redford Street
Tuesday, September 26, 2017

Time Period Begins	Redford St NORTH Approach				Redford St SOUTH Approach				3rd Ave WEST Approach				3rd Ave EAST Approach				Total Volume		Peak	Crosswalks				Conflict	
	Left	Thru	Right	Total	Left	Thru	Right	Total	Left	Thru	Right	Total	Left	Thru	Right	Total	15-min	Hour		N	S	W	E	15 min	Hr
12:00	20	112	0	132	1	104	39	144	0	0	1	1	32	0	44	76	353			0	0	0	3	207	
12:15	26	122	2	150	0	98	33	131	0	0	0	0	39	2	28	69	350			0	0	0	4	196	
12:30	21	91	0	112	0	90	32	122	0	0	0	0	28	0	43	71	305			0	2	0	3	186	
12:45	30	140	2	172	0	98	34	132	0	0	1	1	25	0	40	65	370	1378		0	1	3	4	202	791
13:00	24	108	1	133	0	120	38	158	1	0	2	3	41	0	45	86	380	1405		1	1	1	2	228	812
13:15	24	111	0	135	2	112	43	157	0	0	1	1	32	0	36	68	361	1416		0	0	1	0	215	831
13:30	25	94	1	120	0	92	32	124	1	1	1	3	23	0	30	53	300	1411		0	0	2	1	180	825
13:45	21	125	0	146	0	107	25	132	0	0	1	1	28	0	52	80	359	1400		0	1	0	1	205	828
14:00	20	93	2	115	0	129	34	163	0	2	0	2	33	0	44	77	357	1377	*	0	2	0	2	227	827
14:15	25	96	0	121	1	133	37	171	1	2	1	4	22	0	53	75	371	1387	+	0	1	1	2	249	861
14:30	28	116	0	144	0	108	45	153	1	0	1	2	29	1	39	69	368	1455	*	0	0	3	0	222	903
14:45	32	98	1	131	0	108	44	152	0	0	1	1	32	0	55	87	371	1467	*	0	0	0	1	239	937
n/a																									
n/a																									
n/a																									
n/a																									
Total	296	1306	9	**1611**	4	1299	436	**1739**	4	5	10	**19**	364	3	509	**876**	4245			1	8	11	23		2547
Avg Hr	99	435	3	**537**	1	433	145	**580**	1	2	3	**6**	121	1	170	**292**	1415			0	3	4	8		

Peak hour of the intersection

Pk Hr	105	403	3	511	1	478	160	639	2	4	3	9	116	1	191	308	1467	*		0	3	4	5		937
15x4	128	464	8	576	4	532	180	684	4	8	4	16	132	4	220	348	1484	+		0	8	12	8		1068
PHF	0.82	0.87	0.38	**0.89**	0.25	0.90	0.89	**0.93**	0.50	0.50	0.75	**0.56**	0.88	0.25	0.87	**0.89**	0.99			n/a	0.38	0.33	0.63		0.88

Peak hour of conflicting volumes for the intersection

Pk Hr	105	403	3	511	1	478	160	639	2	4	3	9	116	1	191	308	1467	*		0	3	4	5		937
15x4	128	464	8	576	4	532	180	684	4	8	4	16	132	4	220	348	1484	+		0	8	12	8		1068
PHF	0.82	0.87	0.38	**0.89**	0.25	0.90	0.89	**0.93**	0.50	0.50	0.75	**0.56**	0.88	0.25	0.87	**0.89**	0.99			n/a	0.38	0.33	0.63		0.88

** Calculated peak hour occurs during the first or last hour of shift and therefore may be invalid. **

MD Peak Hour Volumes

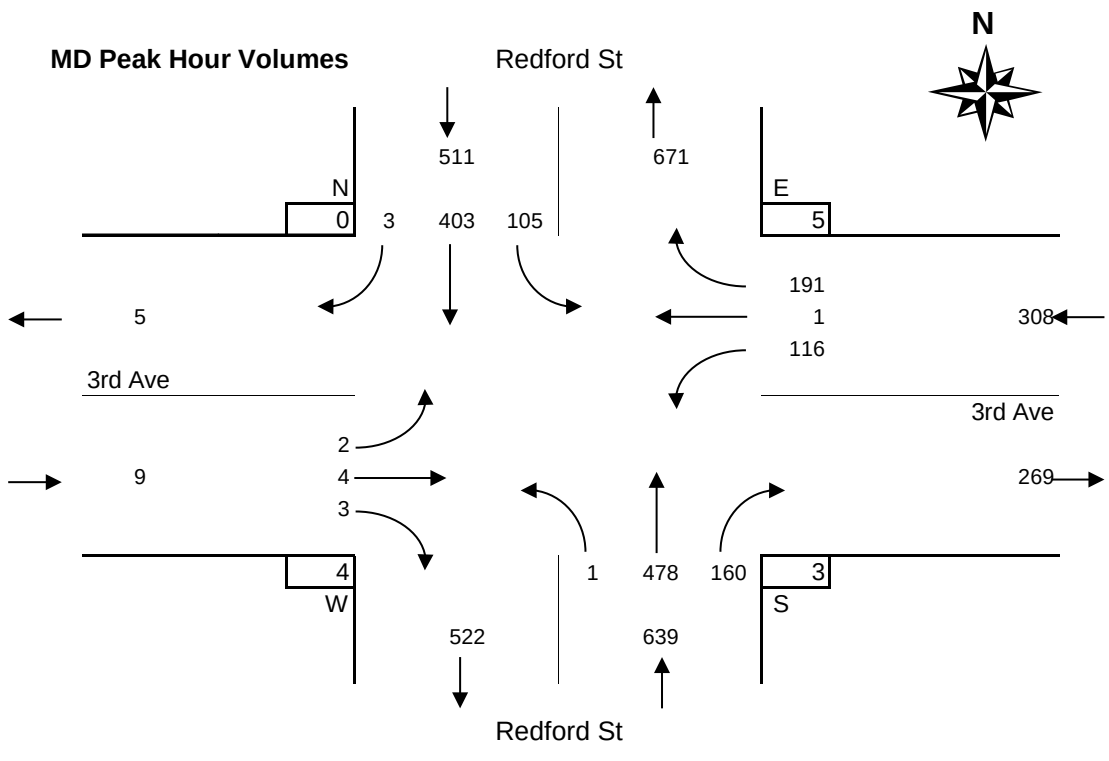

PM Peak Period
Regular Vehicles

3rd Avenue @ Redford Street
Tuesday, September 26, 2017

Time Period Begins	Redford St NORTH Approach				Redford St SOUTH Approach				3rd Ave WEST Approach				3rd Ave EAST Approach				Total Volume		Peak	Crosswalks				Conflict	
	Left	Thru	Right	Total	Left	Thru	Right	Total	Left	Thru	Right	Total	Left	Thru	Right	Total	15-min	Hour		N	S	W	E	15 min	Hr
n/a																									
n/a																									
n/a																									
n/a																									
n/a																									
n/a																									
n/a																									
n/a																									
n/a																									
n/a																									
n/a																									
n/a																									
n/a																									
n/a																									
n/a																									
n/a																									
n/a																									
n/a																									
n/a																									
Total																									0
Avg Hr																									

Peak hour of the intersection

Pk Hr																		*							0
15x4																		+							0
PHF																									n/a

Peak hour of conflicting volumes for the intersection

Pk Hr																		*							0
15x4																		+							0
PHF																									n/a

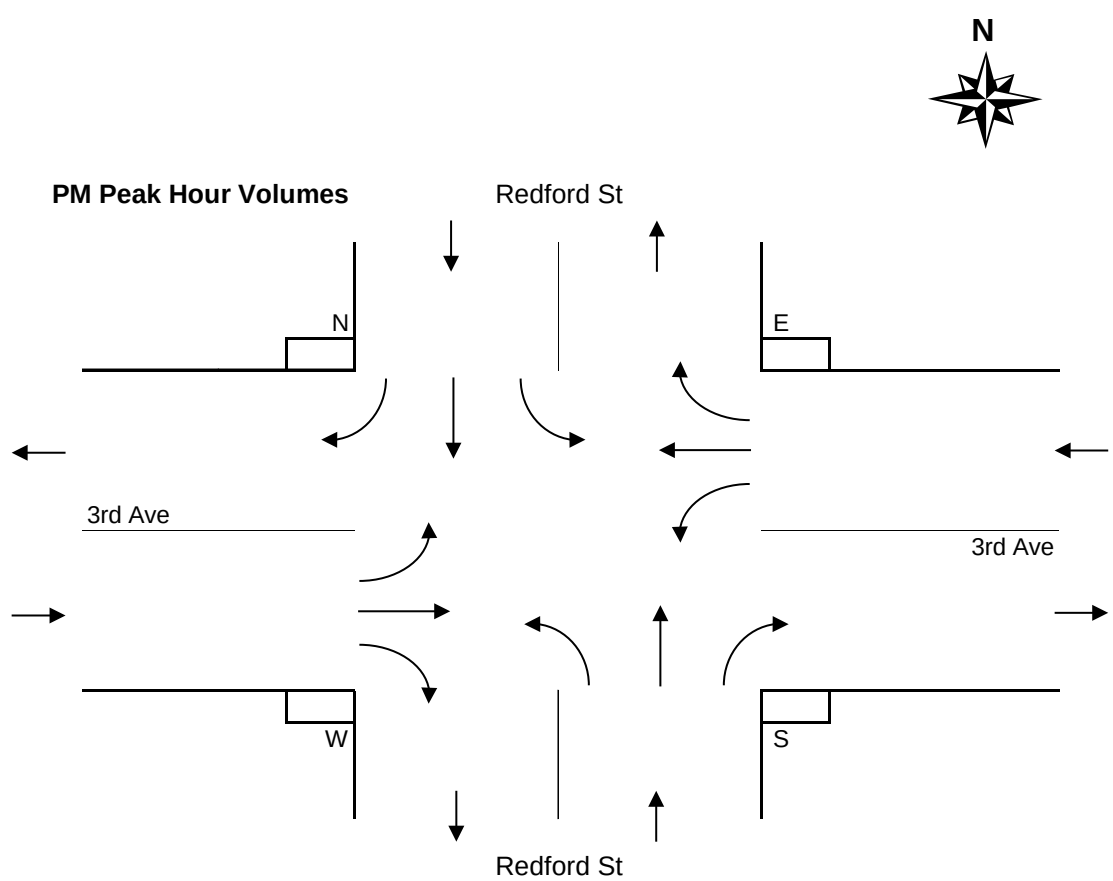

Period Hourly Averages
Regular Vehicles

3rd Avenue @ Redford Street
Tuesday, September 26, 2017

Entire Survey Period
8 Hours

	Redford St				Redford St				3rd Ave				3rd Ave				Total	Crosswalks			
	NORTH Approach				SOUTH Approach				WEST Approach				EAST Approach				Volume				
Totals	Left	Thru	Right	Total	Left	Thru	Right	Total	Left	Thru	Right	Total	Left	Thru	Right	Total		N	S	W	E
Total	666	3074	22	**3762**	10	2812	904	**3726**	12	13	18	**43**	859	14	1180	**2053**	9584	1	12	14	63
Avg Hr	83	384	3	**470**	1	352	113	**466**	2	2	2	**5**	107	2	148	**257**	1198	0	2	2	8

AM Peak Period
5 Hours

	Redford St				Redford St				3rd Ave				3rd Ave				Total	Crosswalks			
	NORTH Approach				SOUTH Approach				WEST Approach				EAST Approach				Volume				
Totals	Left	Thru	Right	Total	Left	Thru	Right	Total	Left	Thru	Right	Total	Left	Thru	Right	Total		N	S	W	E
Period	370	1768	13	**2151**	6	1513	468	**1987**	8	8	8	**24**	495	11	671	**1177**	5339	0	4	3	40
Avg Hr	74	354	3	**430**	1	303	94	**397**	2	2	2	**5**	99	2	134	**235**	1068	0	1	1	8

MD Peak Period
3 Hours

	Redford St				Redford St				3rd Ave				3rd Ave				Total	Crosswalks			
	NORTH Approach				SOUTH Approach				WEST Approach				EAST Approach				Volume				
Totals	Left	Thru	Right	Total	Left	Thru	Right	Total	Left	Thru	Right	Total	Left	Thru	Right	Total		N	S	W	E
Total	296	1306	9	**1611**	4	1299	436	**1739**	4	5	10	**19**	364	3	509	**876**	4245	1	8	11	23
Avg Hr	99	435	3	**537**	1	433	145	**580**	1	2	3	**6**	121	1	170	**292**	1415	0	3	4	8

PM Peak Period
Hours

	Redford St				Redford St				3rd Ave				3rd Ave				Total	Crosswalks			
	NORTH Approach				SOUTH Approach				WEST Approach				EAST Approach				Volume				
Totals	Left	Thru	Right	Total	Left	Thru	Right	Total	Left	Thru	Right	Total	Left	Thru	Right	Total		N	S	W	E
Total																					
Avg Hr																					

Average Hour Volumes

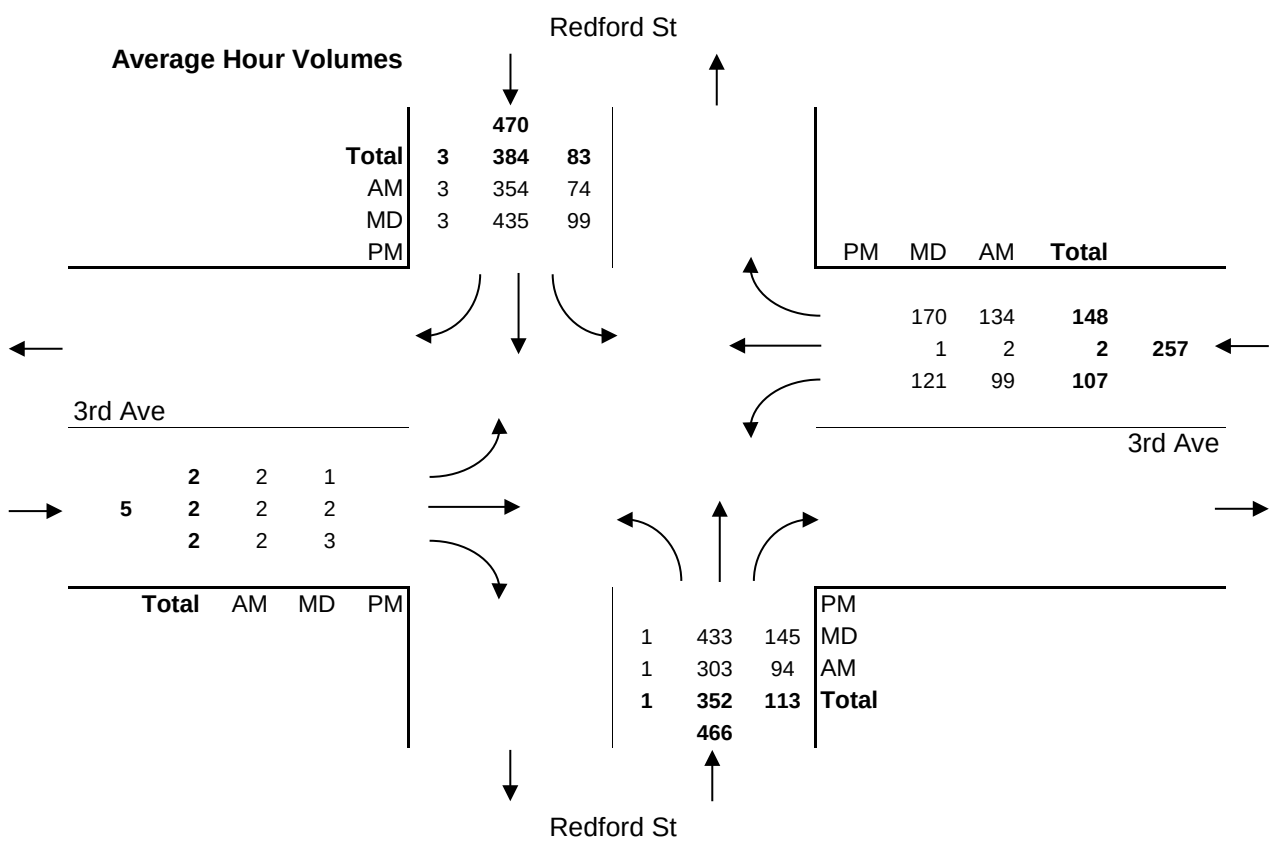

Vehicle Turning Movement Survey
With Classification

Major Route: 3rd Avenue
Minor Route: Redford Street
Municipality: Port Alberni
Filename: 1-3rd Ave @ Redford St-Sep 26, 2017.xlsx
Location #: 1

Date: September 26, 2017
Day-of-week: Tuesday

East/West Route: 3rd Avenue
Intersection Type: 4-leg
Signalized?: Yes
Weather: Clear and dry

Vehicle Classifications: Regular Vehicles
Buses
Articulated Trucks
Cube Trucks
Dump Trucks
Emergency Trucks
Garbage Trucks
Logging Trucks
RVs
Utility Trucks

This data is for Buses

Shift	Start	End	Duration
AM	7:00	12:00	5.00
MD	12:00	15:00	3.00
PM			
Total	**7:00**		**8.00**

Notes: 24-hour clock used for reporting (15-minute increments)
North Approach - southbound vehicles approaching intersection from the north
15x4 - 15 min volume (from maximum 15 minute period of movement/approach in peak hour period [*]) x 4
Pedestrians - N indicates pedestrians crossing north approach (east/west)

Comments:

Survey Data
Buses

3rd Avenue @ Redford Street
Tuesday, September 26, 2017

Time Period Begins	Redford St NORTH Approach				Redford St SOUTH Approach				3rd Ave WEST Approach				3rd Ave EAST Approach				Total Volume		Peak				
	Left	Thru	Right	Total	Left	Thru	Right	Total	Left	Thru	Right	Total	Left	Thru	Right	Total	15-min	Hour		N	S	W	E
7:00	0	0	0	**0**	0	0	0	**0**	0	0	0	**0**	0	0	1	**1**	**1**			0	0	0	0
7:15	0	0	0	**0**	0	0	0	**0**	0	0	0	**0**	0	0	0	**0**	**0**			0	0	0	0
7:30	0	0	0	**0**	0	0	1	**1**	0	0	0	**0**	0	0	0	**0**	**1**			0	0	0	0
7:45	0	0	0	**0**	0	1	0	**1**	0	0	0	**0**	0	0	0	**0**	**1**	3		0	0	0	0
8:00	0	0	0	**0**	0	0	1	**1**	0	0	0	**0**	0	0	1	**1**	**2**	4		0	0	0	0
8:15	0	0	0	**0**	0	1	0	**1**	0	0	0	**0**	0	0	0	**0**	**1**	5		0	0	0	0
8:30	0	1	0	**1**	0	0	0	**0**	0	0	0	**0**	0	0	0	**0**	**1**	5		0	0	0	0
8:45	0	0	0	**0**	0	0	1	**1**	0	0	0	**0**	0	0	0	**0**	**1**	5		0	0	0	0
9:00	0	0	0	**0**	0	0	0	**0**	0	0	0	**0**	0	0	0	**0**	**0**	3		0	0	0	0
9:15	1	0	0	**1**	0	0	0	**0**	0	0	0	**0**	0	0	1	**1**	**2**	4		0	0	0	0
9:30	0	1	0	**1**	0	0	1	**1**	0	0	0	**0**	0	0	0	**0**	**2**	5		0	0	0	0
9:45	0	0	0	**0**	0	0	0	**0**	0	0	0	**0**	0	0	0	**0**	**0**	4		0	0	0	0
10:00	0	0	0	**0**	0	0	1	**1**	0	0	0	**0**	1	0	1	**2**	**3**	7		0	0	0	0
10:15	0	0	0	**0**	0	1	1	**2**	0	0	0	**0**	0	0	0	**0**	**2**	7		0	0	0	0
10:30	1	0	0	**1**	0	1	0	**1**	0	0	0	**0**	0	0	0	**0**	**2**	7		0	0	0	0
10:45	0	0	0	**0**	0	0	0	**0**	0	0	0	**0**	0	0	0	**0**	**0**	7		0	0	0	0
11:00	0	0	0	**0**	0	0	1	**1**	0	0	0	**0**	0	0	0	**0**	**1**	5	*	0	0	0	0
11:15	0	0	0	**0**	0	0	0	**0**	0	0	0	**0**	0	0	1	**1**	**1**	4	*	0	0	0	0
11:30	1	0	0	**1**	0	0	1	**1**	0	0	0	**0**	0	0	1	**1**	**3**	5	*	0	0	0	0
11:45	1	1	0	**2**	0	0	0	**0**	0	0	0	**0**	0	0	0	**0**	**2**	7	+	0	0	0	0
Total	4	3	0	**7**	0	4	8	**12**	0	0	0	**0**	1	0	6	**7**	**26**			0	0	0	0
12:00	0	0	0	**0**	0	0	0	**0**	0	0	0	**0**	0	0	0	**0**	**0**			0	0	0	0
12:15	0	0	0	**0**	0	0	1	**1**	0	0	0	**0**	1	0	0	**1**	**2**			0	0	0	0
12:30	0	0	0	**0**	0	0	0	**0**	0	0	0	**0**	0	0	0	**0**	**0**			0	0	0	0
12:45	0	0	0	**0**	0	0	1	**1**	0	0	0	**0**	0	0	0	**0**	**1**	3		0	0	0	0
13:00	1	0	0	**1**	0	0	0	**0**	0	0	0	**0**	1	0	0	**1**	**2**	5		0	0	0	0
13:15	0	0	0	**0**	0	0	0	**0**	0	0	0	**0**	0	0	0	**0**	**0**	3		0	0	0	0
13:30	0	0	0	**0**	0	1	2	**3**	0	0	0	**0**	0	0	0	**0**	**3**	6		0	0	0	0
13:45	0	0	0	**0**	0	0	0	**0**	0	0	0	**0**	0	0	0	**0**	**0**	5		0	0	0	0
14:00	0	0	0	**0**	0	1	0	**1**	0	0	0	**0**	0	0	0	**0**	**1**	4	*	0	0	0	0
14:15	0	0	0	**0**	0	0	1	**1**	0	0	0	**0**	0	0	2	**2**	**3**	7	+	0	0	0	0
14:30	0	0	0	**0**	0	0	0	**0**	0	0	0	**0**	0	0	0	**0**	**0**	4	*	0	0	0	0
14:45	0	0	0	**0**	0	0	0	**0**	0	0	0	**0**	0	0	0	**0**	**0**	4	*	0	0	0	0
n/a																							
n/a																							
n/a																							
n/a																							
Total	1	0	0	**1**	0	2	5	**7**	0	0	0	**0**	2	0	2	**4**	**12**			0	0	0	0
n/a																							
n/a																							
n/a																							
n/a																							
n/a																							
n/a																							
n/a																							
n/a																							
n/a																							
n/a																							
n/a																							
n/a																							
n/a																							
n/a																							
n/a																							
n/a																							
n/a																							
n/a																							
Total																							

AM Peak Period
Buses

3rd Avenue @ Redford Street
Tuesday, September 26, 2017

Time Period Begins	Redford St NORTH Approach				Redford St SOUTH Approach				3rd Ave WEST Approach				3rd Ave EAST Approach				Total Volume		Peak					Conflict	
	Left	Thru	Right	Total	Left	Thru	Right	Total	Left	Thru	Right	Total	Left	Thru	Right	Total	15-min	Hour		N	S	W	E	15 min	Hr
7:00	0	0	0	0	0	0	0	0	0	0	0	0	0	0	1	1	1			0	0	0	0	1	
7:15	0	0	0	0	0	0	0	0	0	0	0	0	0	0	0	0	0			0	0	0	0	0	
7:30	0	0	0	0	0	0	1	1	0	0	0	0	0	0	0	0	1			0	0	0	0	1	
7:45	0	0	0	0	0	1	0	1	0	0	0	0	0	0	0	0	1	3		0	0	0	0	1	3
8:00	0	0	0	0	0	0	1	1	0	0	0	0	0	0	1	1	2	4		0	0	0	0	2	4
8:15	0	0	0	0	0	1	0	1	0	0	0	0	0	0	0	0	1	5		0	0	0	0	1	5
8:30	0	1	0	1	0	0	0	0	0	0	0	0	0	0	0	0	1	5		0	0	0	0	1	5
8:45	0	0	0	0	0	0	1	1	0	0	0	0	0	0	0	0	1	5		0	0	0	0	1	5
9:00	0	0	0	0	0	0	0	0	0	0	0	0	0	0	0	0	0	3		0	0	0	0	0	3
9:15	1	0	0	1	0	0	0	0	0	0	0	0	0	0	1	1	2	4		0	0	0	0	2	4
9:30	0	1	0	1	0	0	1	1	0	0	0	0	0	0	0	0	2	5		0	0	0	0	1	4
9:45	0	0	0	0	0	0	0	0	0	0	0	0	0	0	0	0	0	4		0	0	0	0	0	3
10:00	0	0	0	0	0	0	1	1	0	0	0	0	1	0	1	2	3	7		0	0	0	0	2	5
10:15	0	0	0	0	0	1	1	2	0	0	0	0	0	0	0	0	2	7		0	0	0	0	2	5
10:30	1	0	0	1	0	1	0	1	0	0	0	0	0	0	0	0	2	7		0	0	0	0	2	6
10:45	0	0	0	0	0	0	0	0	0	0	0	0	0	0	0	0	0	7		0	0	0	0	0	6
11:00	0	0	0	0	0	0	1	1	0	0	0	0	0	0	0	0	1	5	*	0	0	0	0	1	5
11:15	0	0	0	0	0	0	0	0	0	0	0	0	0	0	1	1	1	4	*	0	0	0	0	1	4
11:30	1	0	0	1	0	0	1	1	0	0	0	0	0	0	1	1	3	5	*	0	0	0	0	3	5
11:45	1	1	0	2	0	0	0	0	0	0	0	0	0	0	0	0	2	7	+	0	0	0	0	1	6
Total	4	3	0	**7**	0	4	8	**12**	0	0	0	**0**	1	0	6	**7**	26			0	0	0	0		22
Avg Hr	1	1	0	**1**	0	1	2	**2**	0	0	0	**0**	0	0	1	**1**	5			0	0	0	0		

Peak hour of the intersection

Pk Hr	2	1	0	3	0	0	2	2	0	0	0	0	0	0	2	2	7	*		0	0	0	0		6
15x4	4	4	0	8	0	0	4	4	0	0	0	0	0	0	4	4	12	+		0	0	0	0		12
PHF	0.50	0.25	n/a	**0.38**	n/a	n/a	0.50	**0.50**	n/a	n/a	n/a	**n/a**	n/a	n/a	0.50	**0.50**	0.58			n/a	n/a	n/a	n/a		0.50

Peak hour of conflicting volumes for the intersection

Pk Hr	2	1	0	3	0	0	2	2	0	0	0	0	0	0	2	2	7	*		0	0	0	0		6
15x4	4	4	0	8	0	0	4	4	0	0	0	0	0	0	4	4	12	+		0	0	0	0		12
PHF	0.50	0.25	n/a	**0.38**	n/a	n/a	0.50	**0.50**	n/a	n/a	n/a	**n/a**	n/a	n/a	0.50	**0.50**	0.58			n/a	n/a	n/a	n/a		0.50

** Calculated peak hour occurs during the first or last hour of shift and therefore may be invalid. **

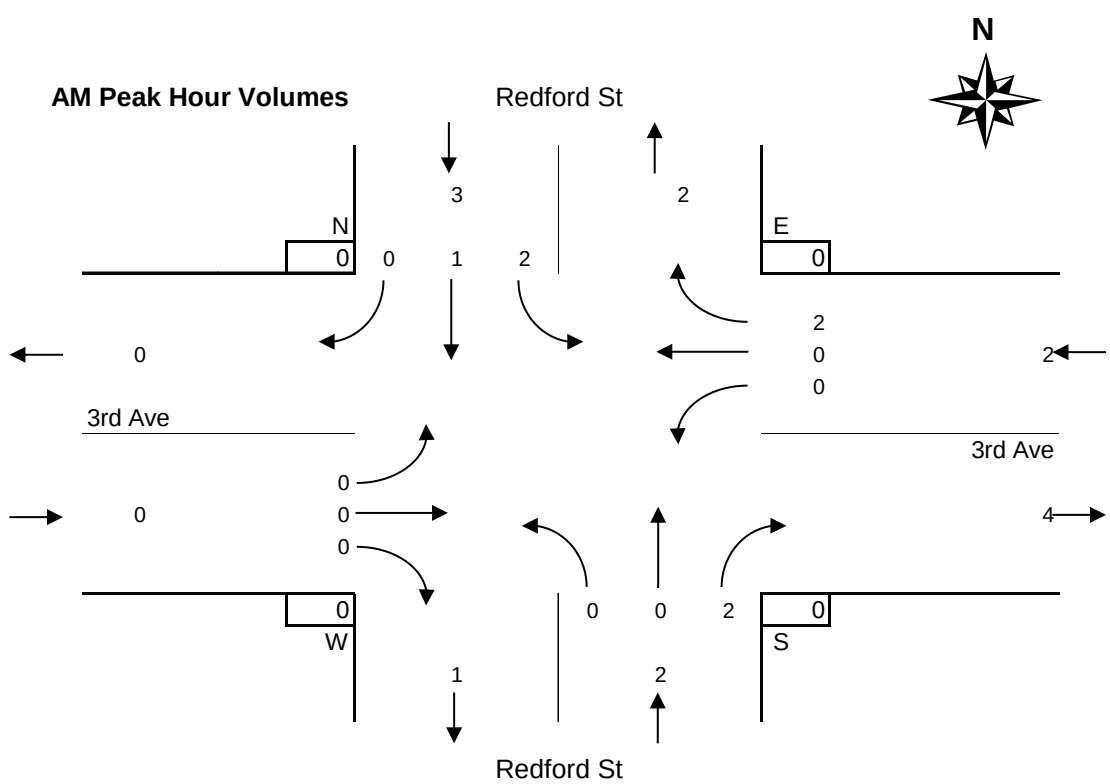

MD Peak Period
Buses

3rd Avenue @ Redford Street
Tuesday, September 26, 2017

Time Period Begins	Redford St NORTH Approach				Redford St SOUTH Approach				3rd Ave WEST Approach				3rd Ave EAST Approach				Total Volume		Peak					Conflict	
	Left	Thru	Right	Total	Left	Thru	Right	Total	Left	Thru	Right	Total	Left	Thru	Right	Total	15-min	Hour		N	S	W	E	15 min	Hr
12:00	0	0	0	0	0	0	0	0	0	0	0	0	0	0	0	0	0			0	0	0	0	0	
12:15	0	0	0	0	0	0	1	1	0	0	0	0	1	0	0	1	2			0	0	0	0	2	
12:30	0	0	0	0	0	0	0	0	0	0	0	0	0	0	0	0	0			0	0	0	0	0	
12:45	0	0	0	0	0	0	1	1	0	0	0	0	0	0	0	0	1	3		0	0	0	0	1	3
13:00	1	0	0	1	0	0	0	0	0	0	0	0	1	0	0	1	2	5		0	0	0	0	2	5
13:15	0	0	0	0	0	0	0	0	0	0	0	0	0	0	0	0	0	3		0	0	0	0	0	3
13:30	0	0	0	0	0	1	2	3	0	0	0	0	0	0	0	0	3	6		0	0	0	0	3	6
13:45	0	0	0	0	0	0	0	0	0	0	0	0	0	0	0	0	0	5		0	0	0	0	0	5
14:00	0	0	0	0	0	1	0	1	0	0	0	0	0	0	0	0	1	4	*	0	0	0	0	1	4
14:15	0	0	0	0	0	0	1	1	0	0	0	0	0	0	2	2	3	7	+	0	0	0	0	3	7
14:30	0	0	0	0	0	0	0	0	0	0	0	0	0	0	0	0	0	4	*	0	0	0	0	0	4
14:45	0	0	0	0	0	0	0	0	0	0	0	0	0	0	0	0	0	4	*	0	0	0	0	0	4
n/a																									
n/a																									
n/a																									
n/a																									
Total	1	0	0	**1**	0	2	5	**7**	0	0	0	**0**	2	0	2	**4**	12			0	0	0	0		10
Avg Hr	0	0	0	**0**	0	1	2	**2**	0	0	0	**0**	1	0	1	**1**	4			0	0	0	0		

Peak hour of the intersection

Pk Hr	0	0	0	0	0	1	1	2	0	0	0	0	0	0	2	2	4	*		0	0	0	0		4
15x4	0	0	0	0	0	4	4	4	0	0	0	0	0	0	8	8	12	+		0	0	0	0		16
PHF	n/a	n/a	n/a	**n/a**	n/a	0.25	0.25	**0.50**	n/a	n/a	n/a	**n/a**	n/a	n/a	0.25	**0.25**	0.33			n/a	n/a	n/a	n/a		0.25

Peak hour of conflicting volumes for the intersection

Pk Hr	0	0	0	0	0	1	1	2	0	0	0	0	0	0	2	2	4	*		0	0	0	0		4
15x4	0	0	0	0	0	4	4	4	0	0	0	0	0	0	8	8	12	+		0	0	0	0		16
PHF	n/a	n/a	n/a	**n/a**	n/a	0.25	0.25	**0.50**	n/a	n/a	n/a	**n/a**	n/a	n/a	0.25	**0.25**	0.33			n/a	n/a	n/a	n/a		0.25

** Calculated peak hour occurs during the first or last hour of shift and therefore may be invalid. **

MD Peak Hour Volumes

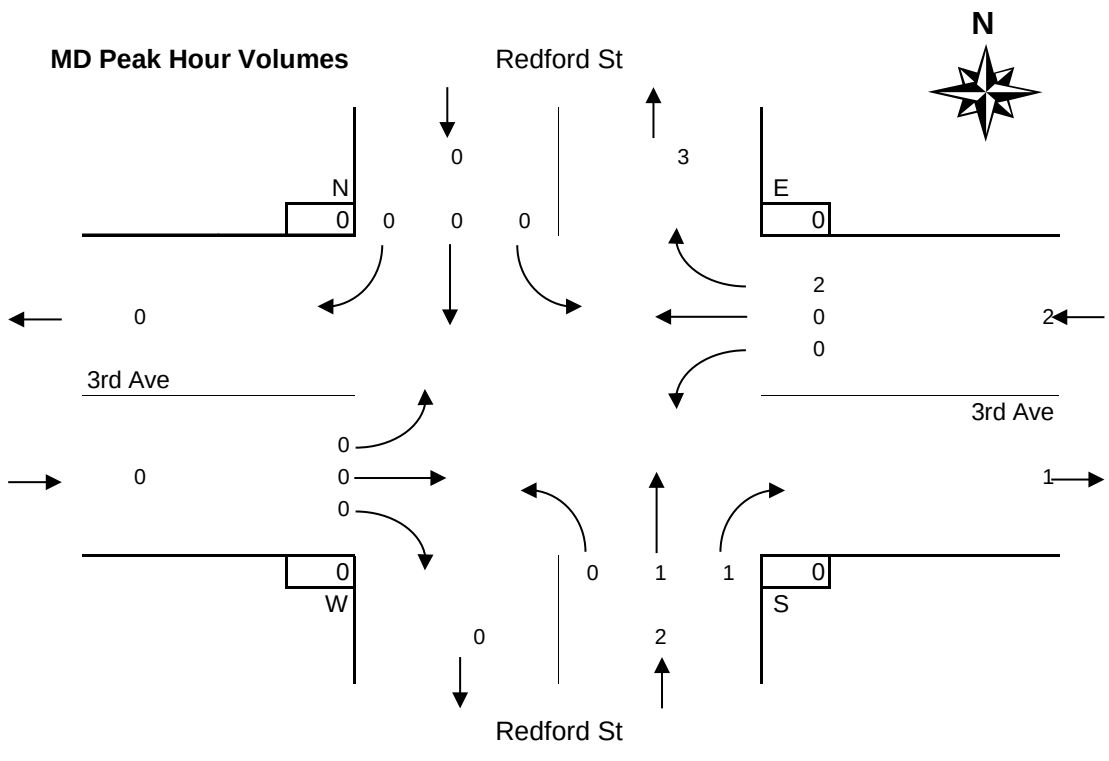

PM Peak Period
Buses

3rd Avenue @ Redford Street
Tuesday, September 26, 2017

Time Period Begins	Redford St NORTH Approach				Redford St SOUTH Approach				3rd Ave WEST Approach				3rd Ave EAST Approach				Total Volume		Peak					Conflict	
	Left	Thru	Right	Total	Left	Thru	Right	Total	Left	Thru	Right	Total	Left	Thru	Right	Total	15-min	Hour		N	S	W	E	15 min	Hr
n/a																									
n/a																									
n/a																									
n/a																									
n/a																									
n/a																									
n/a																									
n/a																									
n/a																									
n/a																									
n/a																									
n/a																									
n/a																									
n/a																									
n/a																									
n/a																									
n/a																									
n/a																									
n/a																									
Total																									0
Avg Hr																									

Peak hour of the intersection

Pk Hr																		*							0
15x4																		+							0
PHF																									n/a

Peak hour of conflicting volumes for the intersection

Pk Hr																		*							0
15x4																		+							0
PHF																									n/a

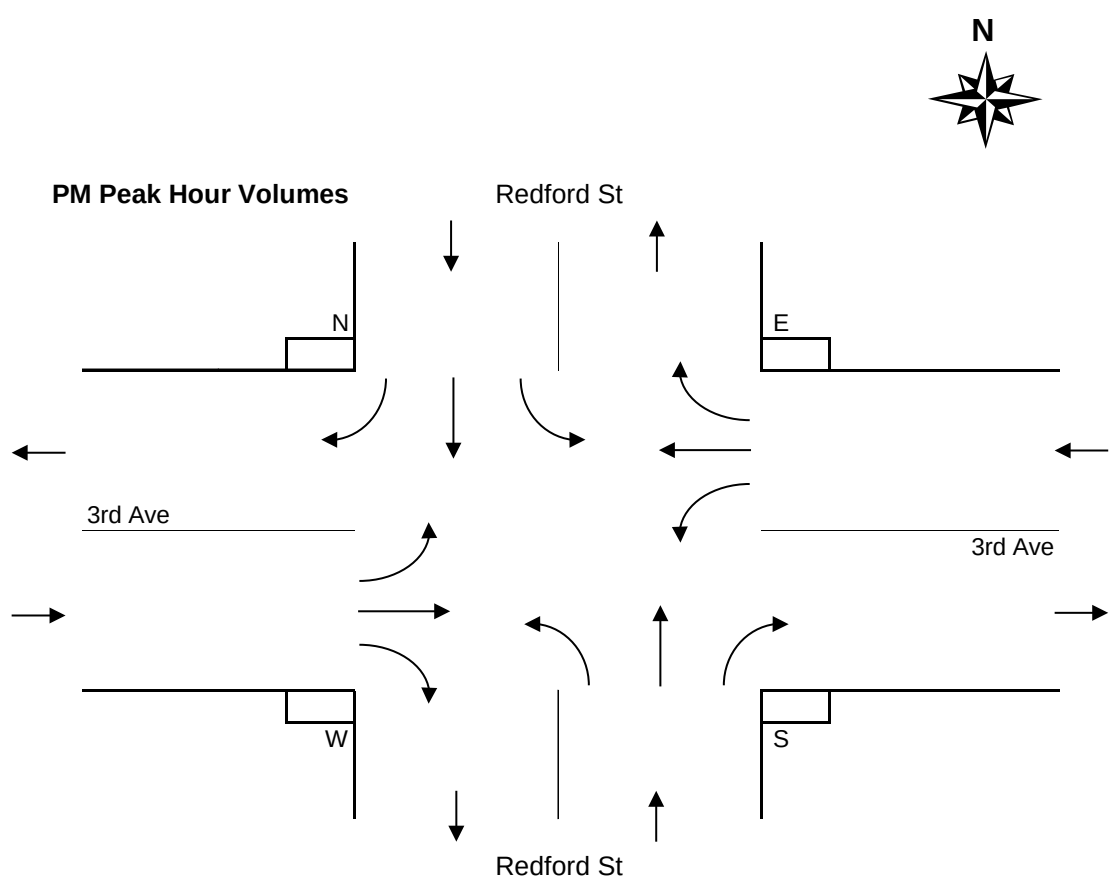

Period Hourly Averages
Buses

3rd Avenue @ Redford Street
Tuesday, September 26, 2017

Entire Survey Period
8 Hours

	Redford St				Redford St				3rd Ave				3rd Ave							
	NORTH Approach				SOUTH Approach				WEST Approach				EAST Approach				Total			
	Left	Thru	Right	Total	Left	Thru	Right	Total	Left	Thru	Right	Total	Left	Thru	Right	Total	Volume	N	S	W	E
Total	5	3	0	**8**	0	6	13	**19**	0	0	0	**0**	3	0	8	**11**	38	0	0	0	0
Avg Hr	1	0	0	**1**	0	1	2	**2**	0	0	0	**0**	0	0	1	**1**	5	0	0	0	0

AM Peak Period
5 Hours

	Redford St				Redford St				3rd Ave				3rd Ave							
	NORTH Approach				SOUTH Approach				WEST Approach				EAST Approach				Total			
Totals	Left	Thru	Right	Total	Left	Thru	Right	Total	Left	Thru	Right	Total	Left	Thru	Right	Total	Volume	N	S	W	E
Period	4	3	0	**7**	0	4	8	**12**	0	0	0	**0**	1	0	6	**7**	26	0	0	0	0
Avg Hr	1	1	0	**1**	0	1	2	**2**	0	0	0	**0**	0	0	1	**1**	5	0	0	0	0

MD Peak Period
3 Hours

	Redford St				Redford St				3rd Ave				3rd Ave							
	NORTH Approach				SOUTH Approach				WEST Approach				EAST Approach				Total			
Totals	Left	Thru	Right	Total	Left	Thru	Right	Total	Left	Thru	Right	Total	Left	Thru	Right	Total	Volume	N	S	W	E
Total	1	0	0	**1**	0	2	5	**7**	0	0	0	**0**	2	0	2	**4**	12	0	0	0	0
Avg Hr	0	0	0	**0**	0	1	2	**2**	0	0	0	**0**	1	0	1	**1**	4	0	0	0	0

PM Peak Period
Hours

	Redford St				Redford St				3rd Ave				3rd Ave							
	NORTH Approach				SOUTH Approach				WEST Approach				EAST Approach				Total			
Totals	Left	Thru	Right	Total	Left	Thru	Right	Total	Left	Thru	Right	Total	Left	Thru	Right	Total	Volume	N	S	W	E
Total																				
Avg Hr																				

Average Hour Volumes

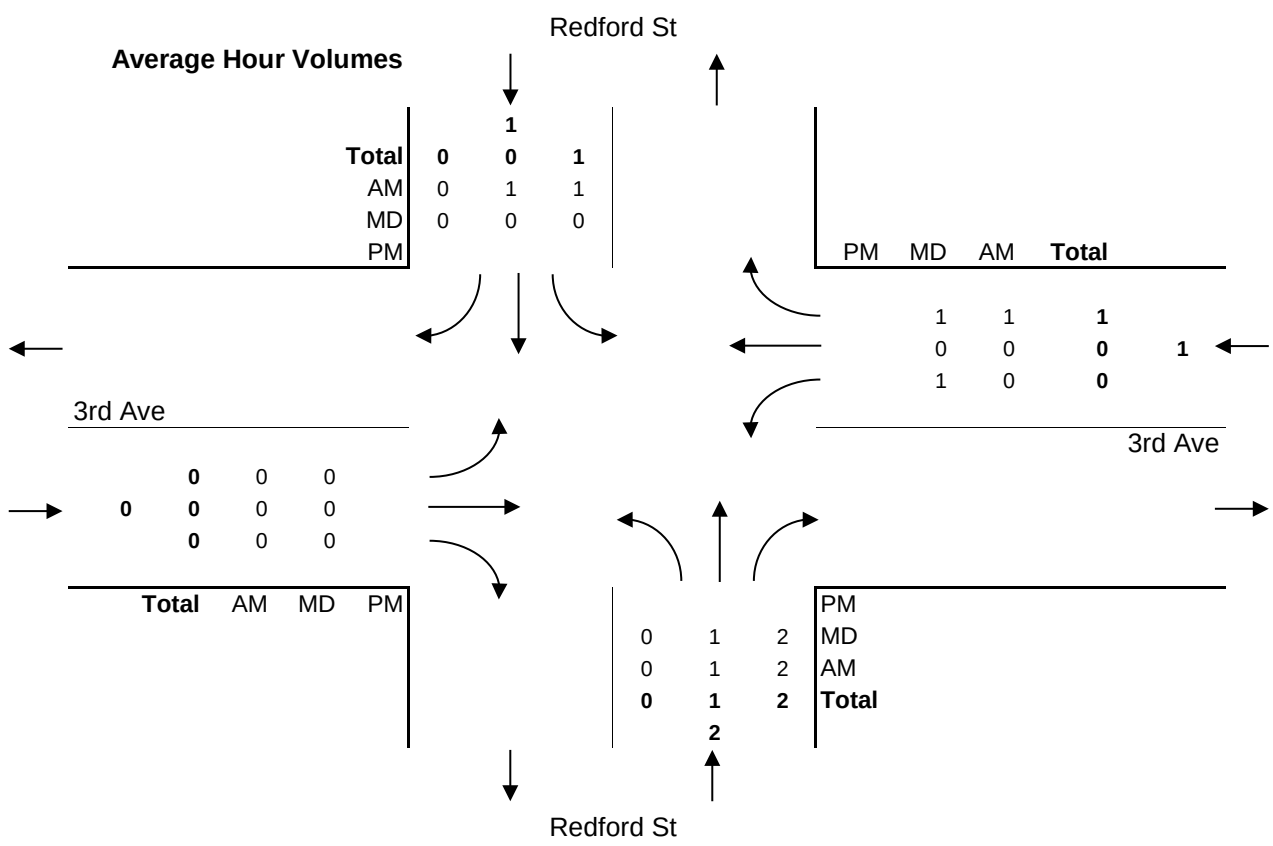

Major Route: 3rd Avenue
Minor Route: Redford Street
Municipality: Port Alberni
Filename: 1-3rd Ave @ Redford St-Sep 26, 2017.xlsx
Location #: 1

Date: September 26, 2017
Day-of-week: Tuesday

East/West Route: 3rd Avenue
Intersection Type: 4-leg
Signalized?: Yes
Weather: Clear and dry

Vehicle Classifications: Regular Vehicles
Buses
Articulated Trucks
Cube Trucks
Dump Trucks
Emergency Trucks
Garbage Trucks
Logging Trucks
RVs
Utility Trucks

This data is for Articulated Trucks

Shift	Start	End	Duration
AM	7:00	12:00	5.00
MD	12:00	15:00	3.00
PM			
Total	**7:00**		**8.00**

Notes: 24-hour clock used for reporting (15-minute increments)
North Approach - southbound vehicles approaching intersection from the north
15x4 - 15 min volume (from maximum 15 minute period of movement/approach in peak hour period [*]) x 4
Pedestrians - N indicates pedestrians crossing north approach (east/west)

Comments:

Survey Data
Articulated Trucks

3rd Avenue @ Redford Street
Tuesday, September 26, 2017

Time Period Begins	Redford St NORTH Approach				Redford St SOUTH Approach				3rd Ave WEST Approach				3rd Ave EAST Approach				Total Volume		Peak				
	Left	Thru	Right	Total	Left	Thru	Right	Total	Left	Thru	Right	Total	Left	Thru	Right	Total	15-min	Hour		N	S	W	E
7:00	0	2	0	**2**	0	0	0	**0**	0	0	0	**0**	2	0	0	**2**	**4**			0	0	0	0
7:15	0	0	0	**0**	0	0	1	**1**	0	1	0	**1**	1	1	0	**2**	**4**			0	0	0	0
7:30	0	0	0	**0**	0	1	3	**4**	0	1	0	**1**	2	0	0	**2**	**7**			0	0	0	0
7:45	1	0	0	**1**	0	0	1	**1**	0	1	0	**1**	2	1	0	**3**	**6**	21		0	0	0	0
8:00	0	0	0	**0**	0	0	0	**0**	0	0	0	**0**	2	0	0	**2**	**2**	19		0	0	0	0
8:15	0	0	0	**0**	0	1	2	**3**	0	1	0	**1**	3	0	0	**3**	**7**	22		0	0	0	0
8:30	0	0	0	**0**	0	0	4	**4**	0	0	0	**0**	0	0	1	**1**	**5**	20		0	0	0	0
8:45	0	0	0	**0**	0	0	1	**1**	0	0	0	**0**	2	1	0	**3**	**4**	18		0	0	0	0
9:00	0	1	0	**1**	0	0	1	**1**	0	1	0	**1**	4	0	0	**4**	**7**	23		0	0	0	0
9:15	1	2	0	**3**	0	0	0	**0**	0	1	0	**1**	0	0	0	**0**	**4**	20		0	0	0	0
9:30	0	0	0	**0**	0	1	2	**3**	0	0	0	**0**	3	1	0	**4**	**7**	22		0	0	0	0
9:45	0	0	0	**0**	0	0	2	**2**	0	1	0	**1**	0	1	0	**1**	**4**	22		0	0	0	0
10:00	0	0	0	**0**	0	0	1	**1**	0	1	0	**1**	0	0	0	**0**	**2**	17		0	0	0	0
10:15	0	0	0	**0**	0	1	1	**2**	0	0	0	**0**	1	1	0	**2**	**4**	17		0	0	0	0
10:30	1	1	0	**2**	0	0	2	**2**	0	0	0	**0**	2	1	0	**3**	**7**	17		0	0	0	0
10:45	0	0	0	**0**	0	0	1	**1**	0	1	0	**1**	4	0	0	**4**	**6**	19		0	0	0	0
11:00	0	0	0	**0**	0	0	0	**0**	0	0	0	**0**	1	2	0	**3**	**3**	20	*	0	0	0	0
11:15	0	1	0	**1**	0	0	2	**2**	0	3	0	**3**	1	1	0	**2**	**8**	24	*	0	0	0	0
11:30	0	0	0	**0**	0	1	2	**3**	0	0	0	**0**	2	0	0	**2**	**5**	22	*	0	0	0	0
11:45	0	0	0	**0**	0	0	2	**2**	0	1	0	**1**	3	0	0	**3**	**6**	22	+	0	0	0	0
Total	3	7	0	**10**	0	5	28	**33**	0	13	0	**13**	35	10	1	**46**	**102**			0	0	0	0
12:00	0	0	0	**0**	0	1	2	**3**	0	0	0	**0**	1	2	0	**3**	**6**			0	0	0	0
12:15	0	0	0	**0**	0	0	1	**1**	0	1	0	**1**	1	2	0	**3**	**5**			0	0	0	0
12:30	0	0	0	**0**	0	0	1	**1**	0	3	0	**3**	4	2	0	**6**	**10**			0	0	0	0
12:45	2	0	0	**2**	0	0	4	**4**	0	2	0	**2**	1	2	0	**3**	**11**	32		0	0	0	0
13:00	0	0	0	**0**	0	0	1	**1**	0	2	0	**2**	1	1	0	**2**	**5**	31		0	0	0	0
13:15	0	0	0	**0**	0	0	2	**2**	0	0	0	**0**	0	1	0	**1**	**3**	29		0	0	0	0
13:30	1	0	0	**1**	0	0	0	**0**	0	2	0	**2**	2	1	0	**3**	**6**	25		0	0	0	0
13:45	0	0	0	**0**	0	0	2	**2**	0	0	0	**0**	2	0	1	**3**	**5**	19		0	0	0	0
14:00	0	0	0	**0**	0	0	1	**1**	0	1	0	**1**	2	0	0	**2**	**4**	18	*	0	0	0	0
14:15	0	0	0	**0**	0	0	0	**0**	0	0	0	**0**	0	1	0	**1**	**1**	16	+	0	0	0	0
14:30	0	0	0	**0**	0	0	2	**2**	0	0	0	**0**	2	2	0	**4**	**6**	16	*	0	0	0	0
14:45	0	1	0	**1**	0	0	1	**1**	0	2	0	**2**	0	1	0	**1**	**5**	16	*	0	0	0	0
n/a																							
n/a																							
n/a																							
n/a																							
Total	3	1	0	**4**	0	1	17	**18**	0	13	0	**13**	16	15	1	**32**	**67**			0	0	0	0
n/a																							
n/a																							
n/a																							
n/a																							
n/a																							
n/a																							
n/a																							
n/a																							
n/a																							
n/a																							
n/a																							
n/a																							
n/a																							
n/a																							
n/a																							
n/a																							
n/a																							
n/a																							
Total																							

AM Peak Period
Articulated Trucks

3rd Avenue @ Redford Street
Tuesday, September 26, 2017

Time Period Begins	Redford St NORTH Approach				Redford St SOUTH Approach				3rd Ave WEST Approach				3rd Ave EAST Approach				Total Volume		Peak					Conflict	
	Left	Thru	Right	Total	Left	Thru	Right	Total	Left	Thru	Right	Total	Left	Thru	Right	Total	15-min	Hour		N	S	W	E	15 min	Hr
7:00	0	2	0	2	0	0	0	0	0	0	0	0	2	0	0	2	4			0	0	0	0	4	
7:15	0	0	0	0	0	0	1	1	0	1	0	1	1	1	0	2	4			0	0	0	0	3	
7:30	0	0	0	0	0	1	3	4	0	1	0	1	2	0	0	2	7			0	0	0	0	7	
7:45	1	0	0	1	0	0	1	1	0	1	0	1	2	1	0	3	6	21		0	0	0	0	5	19
8:00	0	0	0	0	0	0	0	0	0	0	0	0	2	0	0	2	2	19		0	0	0	0	2	17
8:15	0	0	0	0	0	1	2	3	0	1	0	1	3	0	0	3	7	22		0	0	0	0	7	21
8:30	0	0	0	0	0	0	4	4	0	0	0	0	0	0	1	1	5	20		0	0	0	0	5	19
8:45	0	0	0	0	0	0	1	1	0	0	0	0	2	1	0	3	4	18		0	0	0	0	3	17
9:00	0	1	0	1	0	0	1	1	0	1	0	1	4	0	0	4	7	23		0	0	0	0	6	21
9:15	1	2	0	3	0	0	0	0	0	1	0	1	0	0	0	0	4	20		0	0	0	0	3	17
9:30	0	0	0	0	0	1	2	3	0	0	0	0	3	1	0	4	7	22		0	0	0	0	6	18
9:45	0	0	0	0	0	0	2	2	0	1	0	1	0	1	0	1	4	22		0	0	0	0	3	18
10:00	0	0	0	0	0	0	1	1	0	1	0	1	0	0	0	0	2	17		0	0	0	0	2	14
10:15	0	0	0	0	0	1	1	2	0	0	0	0	1	1	0	2	4	17		0	0	0	0	3	14
10:30	1	1	0	2	0	0	2	2	0	0	0	0	2	1	0	3	7	17		0	0	0	0	5	13
10:45	0	0	0	0	0	0	1	1	0	1	0	1	4	0	0	4	6	19		0	0	0	0	6	16
11:00	0	0	0	0	0	0	0	0	0	0	0	0	1	2	0	3	3	20	*	0	0	0	0	2	16
11:15	0	1	0	1	0	0	2	2	0	3	0	3	1	1	0	2	8	24	*	0	0	0	0	6	19
11:30	0	0	0	0	0	1	2	3	0	0	0	0	2	0	0	2	5	22	*	0	0	0	0	5	19
11:45	0	0	0	0	0	0	2	2	0	1	0	1	3	0	0	3	6	22	+	0	0	0	0	6	19
Total	3	7	0	**10**	0	5	28	**33**	0	13	0	**13**	35	10	1	**46**	102			0	0	0	0		84
Avg Hr	1	1	0	**2**	0	1	6	**7**	0	3	0	**3**	7	2	0	**9**	20			0	0	0	0		

Peak hour of the intersection

Pk Hr	0	1	0	1	0	1	6	7	0	4	0	4	7	3	0	10	22	*		0	0	0	0		18
15x4	0	4	0	4	0	4	8	12	0	12	0	12	12	8	0	12	32	+		0	0	0	0		36
PHF	n/a	0.25	n/a	**0.25**	n/a	0.25	0.75	**0.58**	n/a	0.33	n/a	**0.33**	0.58	0.38	n/a	**0.83**	0.69			n/a	n/a	n/a	n/a		0.50

Peak hour of conflicting volumes for the intersection

Pk Hr	0	1	0	1	0	1	6	7	0	4	0	4	7	3	0	10	22	*		0	0	0	0		18
15x4	0	4	0	4	0	4	8	12	0	12	0	12	12	8	0	12	32	+		0	0	0	0		36
PHF	n/a	0.25	n/a	**0.25**	n/a	0.25	0.75	**0.58**	n/a	0.33	n/a	**0.33**	0.58	0.38	n/a	**0.83**	0.69			n/a	n/a	n/a	n/a		0.50

** Calculated peak hour occurs during the first or last hour of shift and therefore may be invalid. **

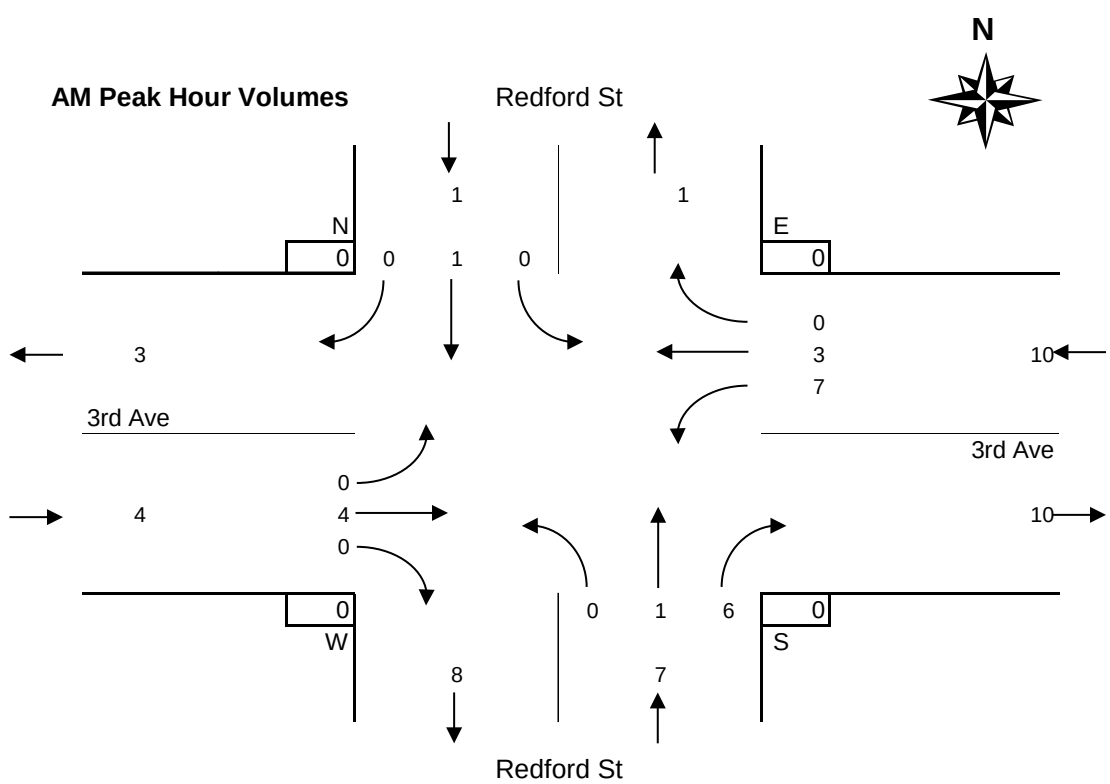

MD Peak Period
Articulated Trucks

3rd Avenue @ Redford Street
Tuesday, September 26, 2017

Time Period Begins	Redford St NORTH Approach				Redford St SOUTH Approach				3rd Ave WEST Approach				3rd Ave EAST Approach				Total Volume		Peak					Conflict	
	Left	Thru	Right	Total	Left	Thru	Right	Total	Left	Thru	Right	Total	Left	Thru	Right	Total	15-min	Hour		N	S	W	E	15 min	Hr
12:00	0	0	0	0	0	1	2	3	0	0	0	0	1	2	0	3	6			0	0	0	0	5	
12:15	0	0	0	0	0	0	1	1	0	1	0	1	1	2	0	3	5			0	0	0	0	3	
12:30	0	0	0	0	0	0	1	1	0	3	0	3	4	2	0	6	10			0	0	0	0	8	
12:45	2	0	0	2	0	0	4	4	0	2	0	2	1	2	0	3	11	32		0	0	0	0	9	25
13:00	0	0	0	0	0	0	1	1	0	2	0	2	1	1	0	2	5	31		0	0	0	0	4	24
13:15	0	0	0	0	0	0	2	2	0	0	0	0	0	1	0	1	3	29		0	0	0	0	3	24
13:30	1	0	0	1	0	0	0	0	0	2	0	2	2	1	0	3	6	25		0	0	0	0	5	21
13:45	0	0	0	0	0	0	2	2	0	0	0	0	2	0	1	3	5	19		0	0	0	0	4	16
14:00	0	0	0	0	0	0	1	1	0	1	0	1	2	0	0	2	4	18	*	0	0	0	0	4	16
14:15	0	0	0	0	0	0	0	0	0	0	0	0	0	1	0	1	1	16	+	0	0	0	0	1	14
14:30	0	0	0	0	0	0	2	2	0	0	0	0	2	2	0	4	6	16	*	0	0	0	0	4	13
14:45	0	1	0	1	0	0	1	1	0	2	0	2	0	1	0	1	5	16	*	0	0	0	0	3	12
n/a																									
n/a																									
n/a																									
n/a																									
Total	3	1	0	**4**	0	1	17	**18**	0	13	0	**13**	16	15	1	**32**	67			0	0	0	0		50
Avg Hr	1	0	0	**1**	0	0	6	**6**	0	4	0	**4**	5	5	0	**11**	22			0	0	0	0		

Peak hour of the intersection

Pk Hr	0	1	0	1	0	0	4	4	0	3	0	3	4	4	0	8	16	*	0	0	0	0	11
15x4	0	4	0	4	0	0	8	8	0	8	0	8	8	8	0	16	24	+	0	0	0	0	24
PHF	n/a	0.25	n/a	**0.25**	n/a	n/a	0.50	**0.50**	n/a	0.38	n/a	**0.38**	0.50	0.50	n/a	**0.50**	0.67		n/a	n/a	n/a	n/a	0.46

Peak hour of conflicting volumes for the intersection

Pk Hr	0	1	0	1	0	0	4	4	0	3	0	3	4	4	0	8	16	*	0	0	0	0	11
15x4	0	4	0	4	0	0	8	8	0	8	0	8	8	8	0	16	24	+	0	0	0	0	24
PHF	n/a	0.25	n/a	**0.25**	n/a	n/a	0.50	**0.50**	n/a	0.38	n/a	**0.38**	0.50	0.50	n/a	**0.50**	0.67		n/a	n/a	n/a	n/a	0.46

** Calculated peak hour occurs during the first or last hour of shift and therefore may be invalid. **

MD Peak Hour Volumes

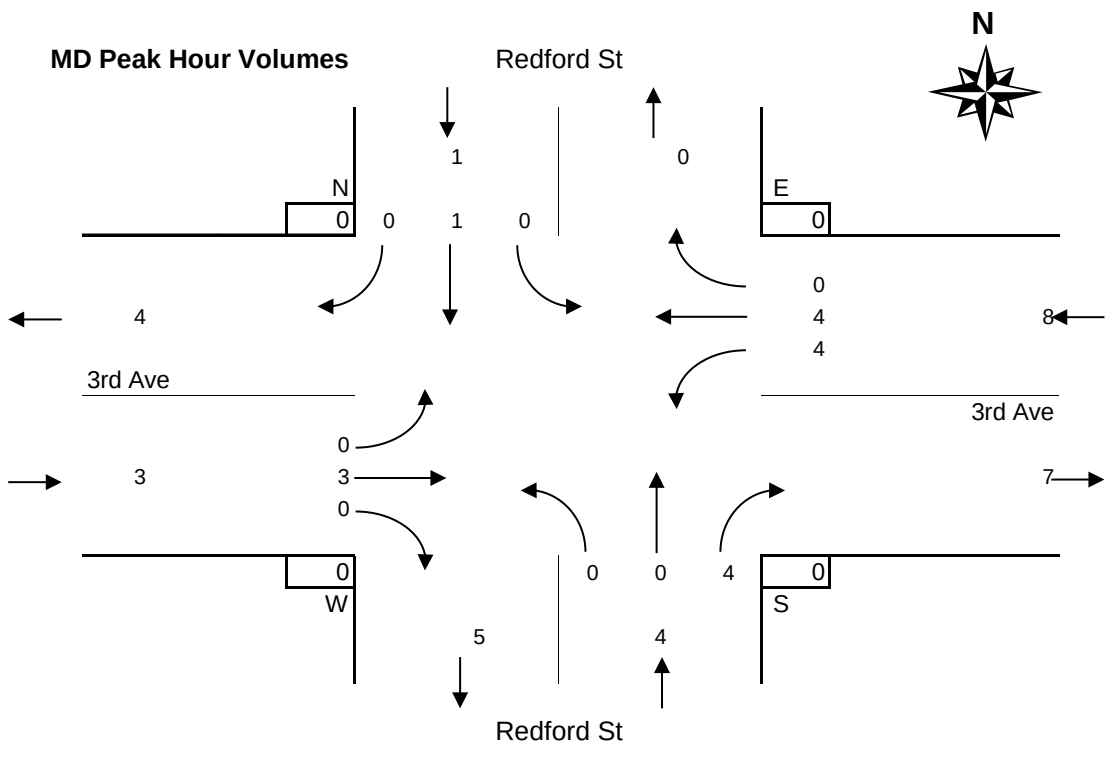

PM Peak Period
Articulated Trucks

3rd Avenue @ Redford Street
Tuesday, September 26, 2017

Time Period Begins	Redford St NORTH Approach				Redford St SOUTH Approach				3rd Ave WEST Approach				3rd Ave EAST Approach				Total Volume		Peak					Conflict	
	Left	Thru	Right	Total	Left	Thru	Right	Total	Left	Thru	Right	Total	Left	Thru	Right	Total	15-min	Hour		N	S	W	E	15 min	Hr
n/a																									
n/a																									
n/a																									
n/a																									
n/a																									
n/a																									
n/a																									
n/a																									
n/a																									
n/a																									
n/a																									
n/a																									
n/a																									
n/a																									
n/a																									
n/a																									
n/a																									
n/a																									
n/a																									
Total																									0
Avg Hr																									

Peak hour of the intersection

Pk Hr																		*							0
15x4																		+							0
PHF																									n/a

Peak hour of conflicting volumes for the intersection

Pk Hr																		*							0
15x4																		+							0
PHF																									n/a

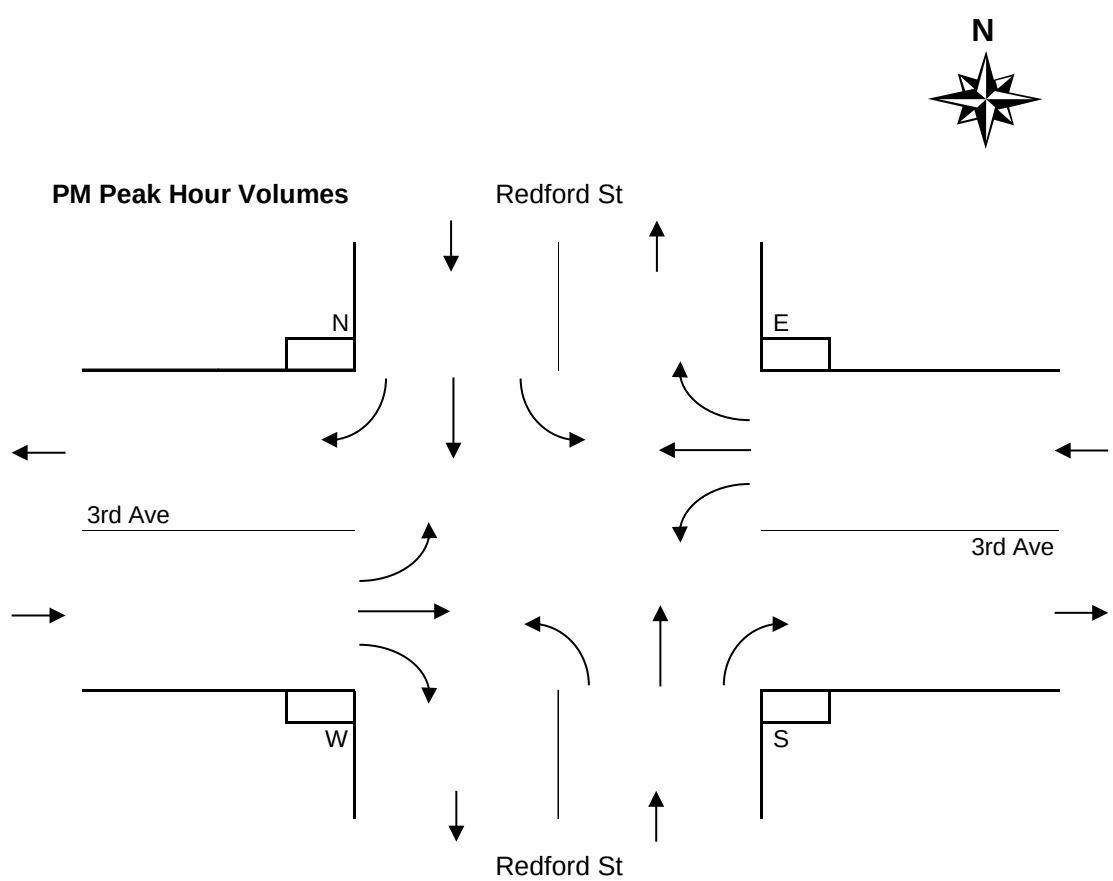

Period Hourly Averages
Articulated Trucks

3rd Avenue @ Redford Street
Tuesday, September 26, 2017

Entire Survey Period
8 Hours

	Redford St				Redford St				3rd Ave				3rd Ave							
	NORTH Approach				SOUTH Approach				WEST Approach				EAST Approach				Total			
	Left	Thru	Right	Total	Left	Thru	Right	Total	Left	Thru	Right	Total	Left	Thru	Right	Total	Volume	N	S	W	E
Total	6	8	0	**14**	0	6	45	**51**	0	26	0	**26**	51	25	2	**78**	169	0	0	0	0
Avg Hr	1	1	0	**2**	0	1	6	**6**	0	3	0	**3**	6	3	0	**10**	21	0	0	0	0

AM Peak Period
5 Hours

	Redford St				Redford St				3rd Ave				3rd Ave							
	NORTH Approach				SOUTH Approach				WEST Approach				EAST Approach				Total			
Totals	Left	Thru	Right	Total	Left	Thru	Right	Total	Left	Thru	Right	Total	Left	Thru	Right	Total	Volume	N	S	W	E
Period	3	7	0	**10**	0	5	28	**33**	0	13	0	**13**	35	10	1	**46**	102	0	0	0	0
Avg Hr	1	1	0	**2**	0	1	6	**7**	0	3	0	**3**	7	2	0	**9**	20	0	0	0	0

MD Peak Period
3 Hours

	Redford St				Redford St				3rd Ave				3rd Ave							
	NORTH Approach				SOUTH Approach				WEST Approach				EAST Approach				Total			
Totals	Left	Thru	Right	Total	Left	Thru	Right	Total	Left	Thru	Right	Total	Left	Thru	Right	Total	Volume	N	S	W	E
Total	3	1	0	**4**	0	1	17	**18**	0	13	0	**13**	16	15	1	**32**	67	0	0	0	0
Avg Hr	1	0	0	**1**	0	0	6	**6**	0	4	0	**4**	5	5	0	**11**	22	0	0	0	0

PM Peak Period
Hours

	Redford St				Redford St				3rd Ave				3rd Ave							
	NORTH Approach				SOUTH Approach				WEST Approach				EAST Approach				Total			
Totals	Left	Thru	Right	Total	Left	Thru	Right	Total	Left	Thru	Right	Total	Left	Thru	Right	Total	Volume	N	S	W	E
Total																				
Avg Hr																				

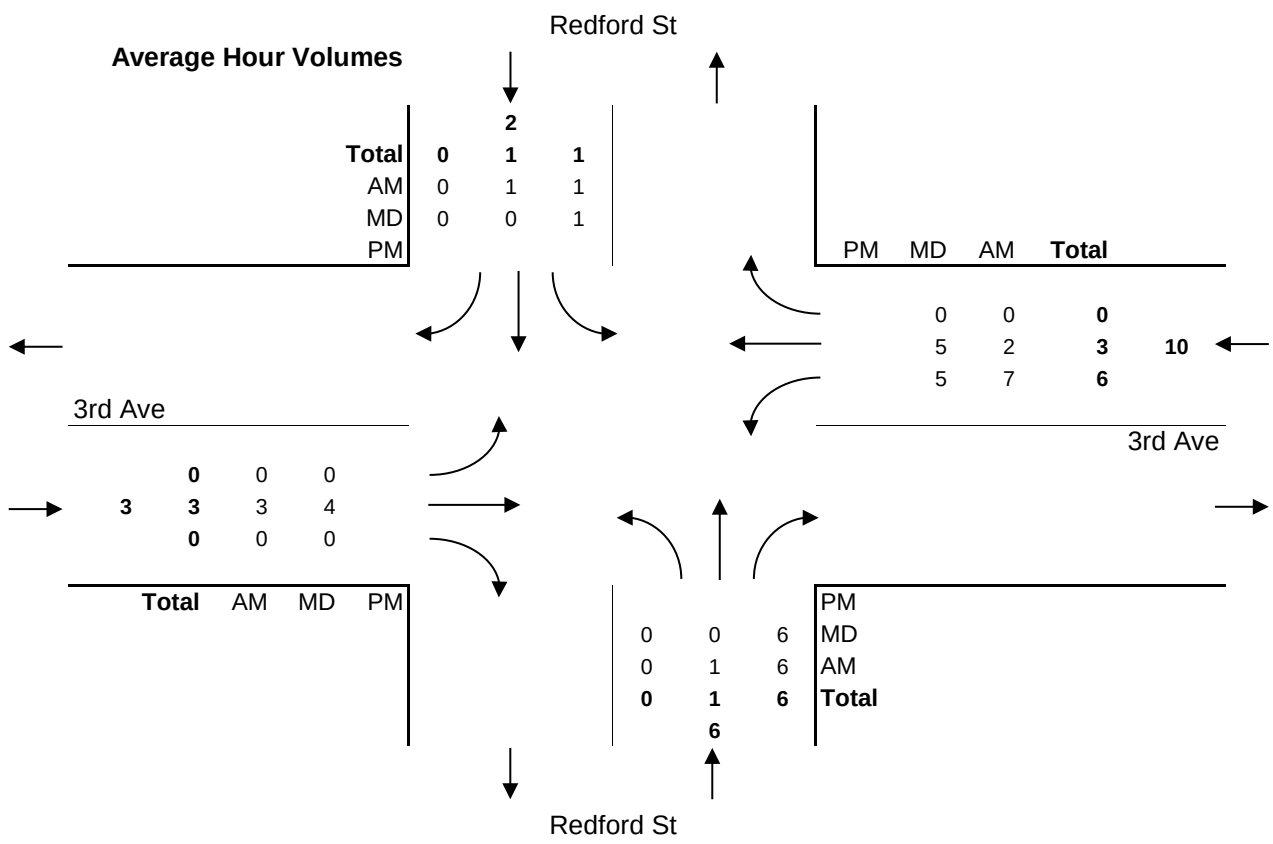

Major Route: 3rd Avenue
Minor Route: Redford Street
Municipality: Port Alberni
Filename: 1-3rd Ave @ Redford St-Sep 26, 2017.xlsx
Location #: 1

Date: September 26, 2017
Day-of-week: Tuesday

East/West Route: 3rd Avenue
Intersection Type: 4-leg
Signalized?: Yes
Weather: Clear and dry

Vehicle Classifications: Regular Vehicles
Buses
Articulated Trucks
Cube Trucks
Dump Trucks
Emergency Trucks
Garbage Trucks
Logging Trucks
RVs
Utility Trucks

This data is for Cube Trucks

Shift	Start	End	Duration
AM	7:00	12:00	5.00
MD	12:00	15:00	3.00
PM			
Total	**7:00**		**8.00**

Notes: 24-hour clock used for reporting (15-minute increments)
North Approach - southbound vehicles approaching intersection from the north
15x4 - 15 min volume (from maximum 15 minute period of movement/approach in peak hour period [*]) x 4
Pedestrians - N indicates pedestrians crossing north approach (east/west)

Comments:

Survey Data
Cube Trucks

3rd Avenue @ Redford Street
Tuesday, September 26, 2017

Time Period Begins	Redford St NORTH Approach				Redford St SOUTH Approach				3rd Ave WEST Approach				3rd Ave EAST Approach				Total Volume		Peak				
	Left	Thru	Right	Total	Left	Thru	Right	Total	Left	Thru	Right	Total	Left	Thru	Right	Total	15-min	Hour		N	S	W	E
7:00	0	1	0	**1**	0	0	0	**0**	0	0	0	**0**	1	0	0	**1**	**2**			0	0	0	0
7:15	0	0	0	**0**	0	2	0	**2**	0	0	0	**0**	0	0	0	**0**	**2**			0	0	0	0
7:30	0	0	0	**0**	0	1	0	**1**	0	0	0	**0**	0	0	0	**0**	**1**			0	0	0	0
7:45	1	1	0	**2**	0	0	0	**0**	0	0	0	**0**	0	0	0	**0**	**2**	7		0	0	0	0
8:00	0	2	0	**2**	0	0	0	**0**	0	0	0	**0**	0	0	0	**0**	**2**	7		0	0	0	0
8:15	0	1	0	**1**	0	2	0	**2**	0	0	0	**0**	1	0	1	**2**	**5**	10		0	0	0	0
8:30	0	1	0	**1**	0	1	0	**1**	0	0	0	**0**	0	0	0	**0**	**2**	11		0	0	0	0
8:45	0	3	0	**3**	0	0	0	**0**	0	0	0	**0**	0	0	0	**0**	**3**	12		0	0	0	0
9:00	0	1	0	**1**	0	1	1	**2**	0	0	0	**0**	0	0	0	**0**	**3**	13		0	0	0	0
9:15	0	0	0	**0**	0	3	0	**3**	0	0	0	**0**	1	0	0	**1**	**4**	12		0	0	0	0
9:30	1	1	0	**2**	0	1	1	**2**	0	0	0	**0**	1	0	0	**1**	**5**	15		0	0	0	0
9:45	0	2	0	**2**	0	0	2	**2**	0	0	0	**0**	0	0	1	**1**	**5**	17		0	0	0	0
10:00	0	0	0	**0**	0	0	0	**0**	0	0	0	**0**	0	0	0	**0**	**0**	14		0	0	0	0
10:15	1	0	0	**1**	0	2	0	**2**	0	0	0	**0**	0	0	0	**0**	**3**	13		0	0	0	0
10:30	0	0	0	**0**	0	0	0	**0**	0	0	0	**0**	1	0	0	**1**	**1**	9		0	0	0	0
10:45	0	0	0	**0**	0	2	1	**3**	0	0	0	**0**	0	0	0	**0**	**3**	7		0	0	0	0
11:00	1	2	0	**3**	0	1	0	**1**	0	0	0	**0**	0	0	0	**0**	**4**	11	*	0	0	0	0
11:15	0	2	0	**2**	0	3	0	**3**	0	0	0	**0**	1	0	0	**1**	**6**	14	*	0	0	0	0
11:30	0	0	0	**0**	0	1	0	**1**	0	0	0	**0**	1	0	0	**1**	**2**	15	*	0	0	0	0
11:45	0	3	0	**3**	0	1	0	**1**	0	0	0	**0**	0	0	0	**0**	**4**	16	+	0	0	0	0
Total	4	20	0	**24**	0	21	5	**26**	0	0	0	**0**	7	0	2	**9**	**59**			0	0	0	0
12:00	0	1	0	**1**	0	0	0	**0**	0	0	0	**0**	0	0	0	**0**	**1**			0	0	0	0
12:15	0	1	0	**1**	0	0	0	**0**	0	0	0	**0**	1	0	0	**1**	**2**			0	0	0	0
12:30	0	0	0	**0**	0	2	1	**3**	0	0	0	**0**	0	0	0	**0**	**3**			0	0	0	0
12:45	0	0	0	**0**	0	0	0	**0**	0	0	0	**0**	1	0	0	**1**	**1**	7		0	0	0	0
13:00	0	0	0	**0**	0	0	0	**0**	0	0	0	**0**	0	0	0	**0**	**0**	6		0	0	0	0
13:15	1	1	0	**2**	0	2	1	**3**	0	0	0	**0**	0	0	0	**0**	**5**	9		0	0	0	0
13:30	0	0	0	**0**	0	3	0	**3**	0	0	0	**0**	0	0	0	**0**	**3**	9		0	0	0	0
13:45	0	1	0	**1**	0	1	1	**2**	0	0	0	**0**	0	0	2	**2**	**5**	13		0	0	0	0
14:00	0	1	0	**1**	0	2	0	**2**	0	0	0	**0**	0	0	0	**0**	**3**	16	*	0	0	0	0
14:15	2	0	0	**2**	0	0	1	**1**	0	0	0	**0**	1	0	1	**2**	**5**	16	+	0	0	0	0
14:30	0	1	0	**1**	0	0	0	**0**	0	0	0	**0**	0	0	0	**0**	**1**	14	*	0	0	0	0
14:45	0	0	0	**0**	0	1	0	**1**	0	0	0	**0**	1	0	1	**2**	**3**	12	*	0	0	0	0
n/a																							
n/a																							
n/a																							
n/a																							
Total	3	6	0	**9**	0	11	4	**15**	0	0	0	**0**	4	0	4	**8**	**32**			0	0	0	0
n/a																							
n/a																							
n/a																							
n/a																							
n/a																							
n/a																							
n/a																							
n/a																							
n/a																							
n/a																							
n/a																							
n/a																							
n/a																							
n/a																							
n/a																							
n/a																							
n/a																							
n/a																							
Total																							

AM Peak Period
Cube Trucks

3rd Avenue @ Redford Street
Tuesday, September 26, 2017

Time Period Begins	Redford St NORTH Approach				Redford St SOUTH Approach				3rd Ave WEST Approach				3rd Ave EAST Approach				Total Volume		Peak					Conflict	
	Left	Thru	Right	Total	Left	Thru	Right	Total	Left	Thru	Right	Total	Left	Thru	Right	Total	15-min	Hour		N	S	W	E	15 min	Hr
7:00	0	1	0	1	0	0	0	0	0	0	0	0	1	0	0	1	2			0	0	0	0	2	
7:15	0	0	0	0	0	2	0	2	0	0	0	0	0	0	0	0	2			0	0	0	0	2	
7:30	0	0	0	0	0	1	0	1	0	0	0	0	0	0	0	0	1			0	0	0	0	1	
7:45	1	1	0	2	0	0	0	0	0	0	0	0	0	0	0	0	2	7		0	0	0	0	1	6
8:00	0	2	0	2	0	0	0	0	0	0	0	0	0	0	0	0	2	7		0	0	0	0	2	6
8:15	0	1	0	1	0	2	0	2	0	0	0	0	1	0	1	2	5	10		0	0	0	0	3	7
8:30	0	1	0	1	0	1	0	1	0	0	0	0	0	0	0	0	2	11		0	0	0	0	1	7
8:45	0	3	0	3	0	0	0	0	0	0	0	0	0	0	0	0	3	12		0	0	0	0	3	9
9:00	0	1	0	1	0	1	1	2	0	0	0	0	0	0	0	0	3	13		0	0	0	0	2	9
9:15	0	0	0	0	0	3	0	3	0	0	0	0	1	0	0	1	4	12		0	0	0	0	4	10
9:30	1	1	0	2	0	1	1	2	0	0	0	0	1	0	0	1	5	15		0	0	0	0	4	13
9:45	0	2	0	2	0	0	2	2	0	0	0	0	0	0	1	1	5	17		0	0	0	0	3	13
10:00	0	0	0	0	0	0	0	0	0	0	0	0	0	0	0	0	0	14		0	0	0	0	0	11
10:15	1	0	0	1	0	2	0	2	0	0	0	0	0	0	0	0	3	13		0	0	0	0	3	10
10:30	0	0	0	0	0	0	0	0	0	0	0	0	1	0	0	1	1	9		0	0	0	0	1	7
10:45	0	0	0	0	0	2	1	3	0	0	0	0	0	0	0	0	3	7		0	0	0	0	3	7
11:00	1	2	0	3	0	1	0	1	0	0	0	0	0	0	0	0	4	11	*	0	0	0	0	2	9
11:15	0	2	0	2	0	3	0	3	0	0	0	0	1	0	0	1	6	14	*	0	0	0	0	4	10
11:30	0	0	0	0	0	1	0	1	0	0	0	0	1	0	0	1	2	15	*	0	0	0	0	2	11
11:45	0	3	0	3	0	1	0	1	0	0	0	0	0	0	0	0	4	16	+	0	0	0	0	3	11
Total	4	20	0	**24**	0	21	5	**26**	0	0	0	**0**	7	0	2	**9**	59			0	0	0	0		37
Avg Hr	1	4	0	**5**	0	4	1	**5**	0	0	0	**0**	1	0	0	**2**	12			0	0	0	0		

Peak hour of the intersection

Pk Hr	1	7	0	8	0	6	0	6	0	0	0	0	2	0	0	2	16	*		0	0	0	0		9
15x4	4	12	0	12	0	12	0	12	0	0	0	0	4	0	0	4	24	+		0	0	0	0		20
PHF	0.25	0.58	n/a	**0.67**	n/a	0.50	n/a	**0.50**	n/a	n/a	n/a	**n/a**	0.50	n/a	n/a	**0.50**	0.67			n/a	n/a	n/a	n/a		0.45

Peak hour of conflicting volumes for the intersection

Pk Hr	1	7	0	8	0	6	0	6	0	0	0	0	2	0	0	2	16	*		0	0	0	0		9
15x4	4	12	0	12	0	12	0	12	0	0	0	0	4	0	0	4	24	+		0	0	0	0		20
PHF	0.25	0.58	n/a	**0.67**	n/a	0.50	n/a	**0.50**	n/a	n/a	n/a	**n/a**	0.50	n/a	n/a	**0.50**	0.67			n/a	n/a	n/a	n/a		0.45

** Calculated peak hour occurs during the first or last hour of shift and therefore may be invalid. **

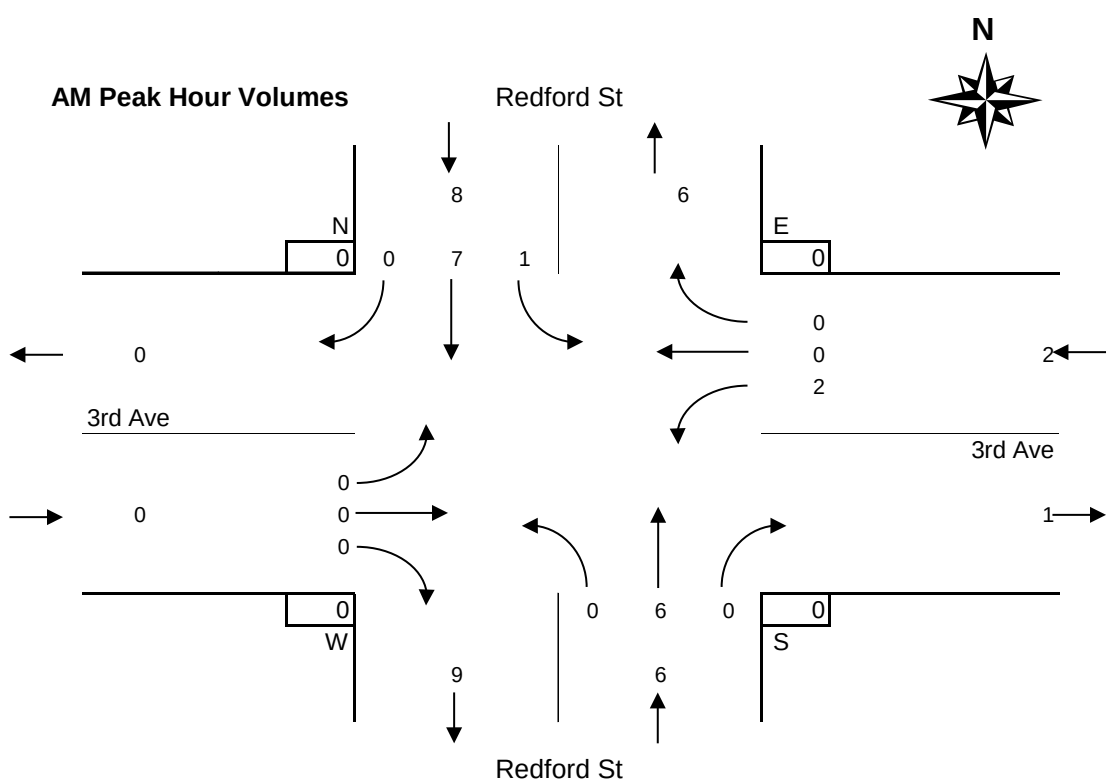

MD Peak Period
Cube Trucks

3rd Avenue @ Redford Street
Tuesday, September 26, 2017

Time Period Begins	Redford St NORTH Approach				Redford St SOUTH Approach				3rd Ave WEST Approach				3rd Ave EAST Approach				Total Volume		Peak					Conflict	
	Left	Thru	Right	Total	Left	Thru	Right	Total	Left	Thru	Right	Total	Left	Thru	Right	Total	15-min	Hour		N	S	W	E	15 min	Hr
12:00	0	1	0	1	0	0	0	0	0	0	0	0	0	0	0	0	1			0	0	0	0	1	
12:15	0	1	0	1	0	0	0	0	0	0	0	0	1	0	0	1	2			0	0	0	0	2	
12:30	0	0	0	0	0	2	1	3	0	0	0	0	0	0	0	0	3			0	0	0	0	3	
12:45	0	0	0	0	0	0	0	0	0	0	0	0	1	0	0	1	1	7		0	0	0	0	1	7
13:00	0	0	0	0	0	0	0	0	0	0	0	0	0	0	0	0	0	6		0	0	0	0	0	6
13:15	1	1	0	2	0	2	1	3	0	0	0	0	0	0	0	0	5	9		0	0	0	0	4	8
13:30	0	0	0	0	0	3	0	3	0	0	0	0	0	0	0	0	3	9		0	0	0	0	3	8
13:45	0	1	0	1	0	1	1	2	0	0	0	0	0	0	2	2	5	13		0	0	0	0	4	11
14:00	0	1	0	1	0	2	0	2	0	0	0	0	0	0	0	0	3	16	*	0	0	0	0	2	13
14:15	2	0	0	2	0	0	1	1	0	0	0	0	1	0	1	2	5	16	+	0	0	0	0	4	13
14:30	0	1	0	1	0	0	0	0	0	0	0	0	0	0	0	0	1	14	*	0	0	0	0	1	11
14:45	0	0	0	0	0	1	0	1	0	0	0	0	1	0	1	2	3	12	*	0	0	0	0	2	9
n/a																									
n/a																									
n/a																									
n/a																									
Total	3	6	0	**9**	0	11	4	**15**	0	0	0	**0**	4	0	4	**8**	32			0	0	0	0		22
Avg Hr	1	2	0	**3**	0	4	1	**5**	0	0	0	**0**	1	0	1	**3**	11			0	0	0	0		

Peak hour of the intersection

Pk Hr	2	2	0	4	0	3	1	4	0	0	0	0	2	0	2	4	12	*		0	0	0	0		8
15x4	8	4	0	8	0	8	4	8	0	0	0	0	4	0	4	8	20	+		0	0	0	0		24
PHF	0.25	0.50	n/a	**0.50**	n/a	0.38	0.25	**0.50**	n/a	n/a	n/a	**n/a**	0.50	n/a	0.50	**0.50**	0.60			n/a	n/a	n/a	n/a		0.33

Peak hour of conflicting volumes for the intersection

Pk Hr	2	2	0	4	0	3	1	4	0	0	0	0	2	0	2	4	12	*		0	0	0	0		8
15x4	8	4	0	8	0	8	4	8	0	0	0	0	4	0	4	8	20	+		0	0	0	0		24
PHF	0.25	0.50	n/a	**0.50**	n/a	0.38	0.25	**0.50**	n/a	n/a	n/a	**n/a**	0.50	n/a	0.50	**0.50**	0.60			n/a	n/a	n/a	n/a		0.33

** Calculated peak hour occurs during the first or last hour of shift and therefore may be invalid. **

MD Peak Hour Volumes

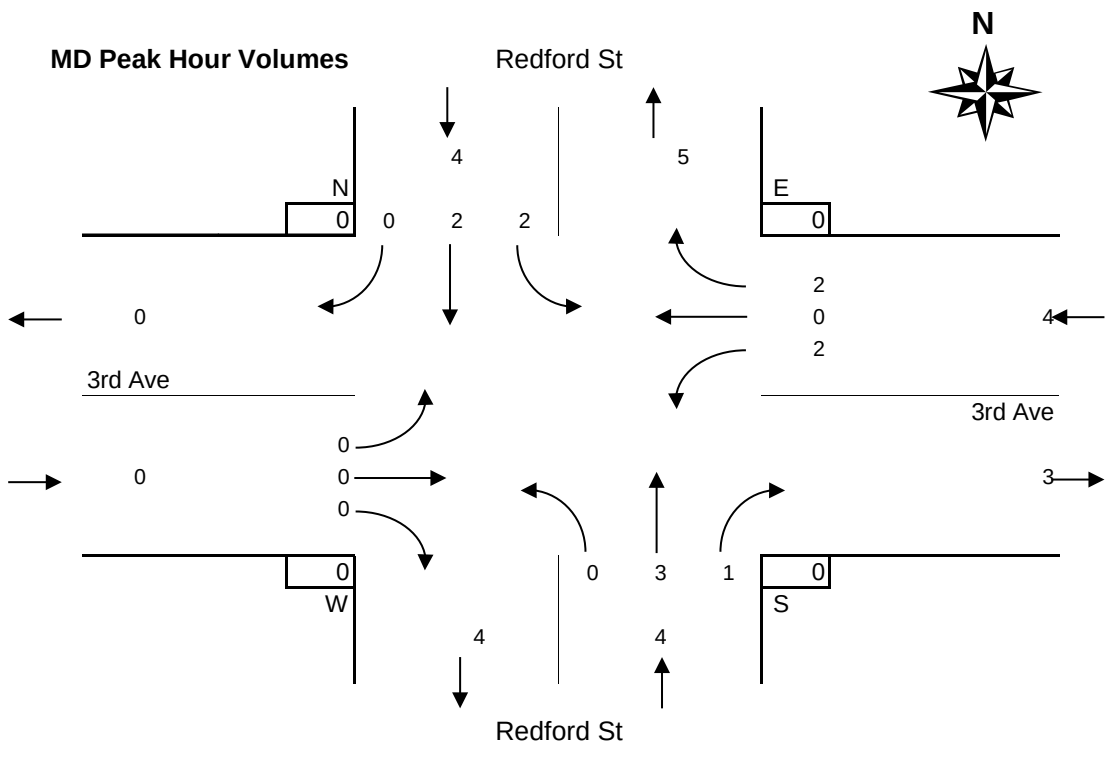

PM Peak Period
Cube Trucks

3rd Avenue @ Redford Street
Tuesday, September 26, 2017

Time Period Begins	Redford St NORTH Approach				Redford St SOUTH Approach				3rd Ave WEST Approach				3rd Ave EAST Approach				Total Volume		Peak					Conflict	
	Left	Thru	Right	Total	Left	Thru	Right	Total	Left	Thru	Right	Total	Left	Thru	Right	Total	15-min	Hour		N	S	W	E	15 min	Hr
n/a																									
n/a																									
n/a																									
n/a																									
n/a																									
n/a																									
n/a																									
n/a																									
n/a																									
n/a																									
n/a																									
n/a																									
n/a																									
n/a																									
n/a																									
n/a																									
n/a																									
n/a																									
n/a																									
Total																									0
Avg Hr																									

Peak hour of the intersection

Pk Hr																		*							0
15x4																		+							0
PHF																									n/a

Peak hour of conflicting volumes for the intersection

Pk Hr																		*							0
15x4																		+							0
PHF																									n/a

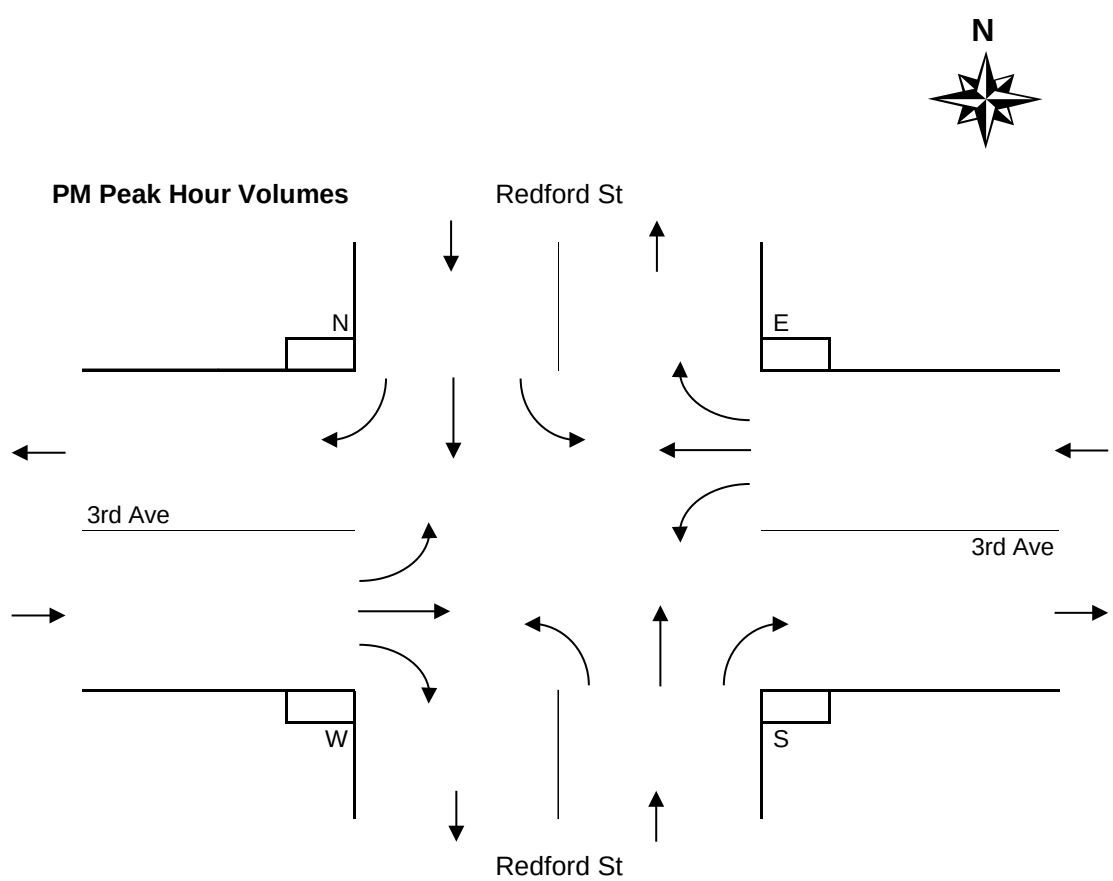

Period Hourly Averages
Cube Trucks

3rd Avenue @ Redford Street
Tuesday, September 26, 2017

Entire Survey Period
8 Hours

	Redford St				Redford St				3rd Ave				3rd Ave							
	NORTH Approach				SOUTH Approach				WEST Approach				EAST Approach				Total			
	Left	Thru	Right	Total	Left	Thru	Right	Total	Left	Thru	Right	Total	Left	Thru	Right	Total	Volume	N	S	W	E
Total	7	26	0	**33**	0	32	9	**41**	0	0	0	**0**	11	0	6	**17**	91	0	0	0	0
Avg Hr	1	3	0	**4**	0	4	1	**5**	0	0	0	**0**	1	0	1	**2**	11	0	0	0	0

AM Peak Period
5 Hours

	Redford St				Redford St				3rd Ave				3rd Ave							
	NORTH Approach				SOUTH Approach				WEST Approach				EAST Approach				Total			
Totals	Left	Thru	Right	Total	Left	Thru	Right	Total	Left	Thru	Right	Total	Left	Thru	Right	Total	Volume	N	S	W	E
Period	4	20	0	**24**	0	21	5	**26**	0	0	0	**0**	7	0	2	**9**	59	0	0	0	0
Avg Hr	1	4	0	**5**	0	4	1	**5**	0	0	0	**0**	1	0	0	**2**	12	0	0	0	0

MD Peak Period
3 Hours

	Redford St				Redford St				3rd Ave				3rd Ave							
	NORTH Approach				SOUTH Approach				WEST Approach				EAST Approach				Total			
Totals	Left	Thru	Right	Total	Left	Thru	Right	Total	Left	Thru	Right	Total	Left	Thru	Right	Total	Volume	N	S	W	E
Total	3	6	0	**9**	0	11	4	**15**	0	0	0	**0**	4	0	4	**8**	32	0	0	0	0
Avg Hr	1	2	0	**3**	0	4	1	**5**	0	0	0	**0**	1	0	1	**3**	11	0	0	0	0

PM Peak Period
Hours

	Redford St				Redford St				3rd Ave				3rd Ave							
	NORTH Approach				SOUTH Approach				WEST Approach				EAST Approach				Total			
Totals	Left	Thru	Right	Total	Left	Thru	Right	Total	Left	Thru	Right	Total	Left	Thru	Right	Total	Volume	N	S	W	E
Total																				
Avg Hr																				

Average Hour Volumes

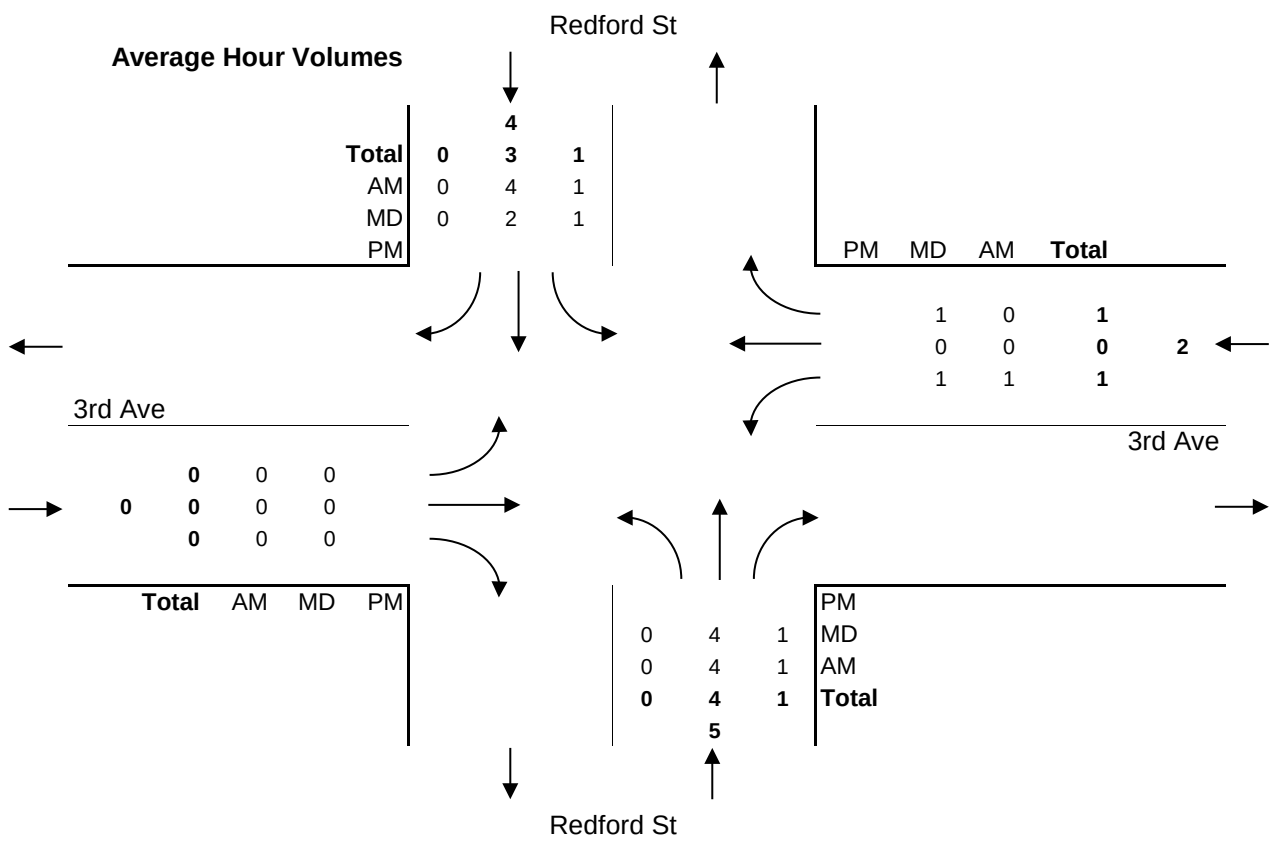

Vehicle Turning Movement Survey
With Classification

Major Route: 3rd Avenue
Minor Route: Redford Street
Municipality: Port Alberni
Filename: 1-3rd Ave @ Redford St-Sep 26, 2017.xlsx
Location #: 1

Date: September 26, 2017
Day-of-week: Tuesday

East/West Route: 3rd Avenue
Intersection Type: 4-leg
Signalized?: Yes
Weather: Clear and dry

Vehicle Classifications: Regular Vehicles
Buses
Articulated Trucks
Cube Trucks
Dump Trucks
Emergency Trucks
Garbage Trucks
Logging Trucks
RVs
Utility Trucks

This data is for Dump Trucks

Shift	Start	End	Duration
AM	7:00	12:00	5.00
MD	12:00	15:00	3.00
PM			
Total	**7:00**		**8.00**

Notes: 24-hour clock used for reporting (15-minute increments)
North Approach - southbound vehicles approaching intersection from the north
15x4 - 15 min volume (from maximum 15 minute period of movement/approach in peak hour period [*]) x 4
Pedestrians - N indicates pedestrians crossing north approach (east/west)

Comments:

Survey Data
Dump Trucks

3rd Avenue @ Redford Street
Tuesday, September 26, 2017

Time Period Begins	Redford St NORTH Approach				Redford St SOUTH Approach				3rd Ave WEST Approach				3rd Ave EAST Approach				Total Volume		Peak				
	Left	Thru	Right	Total	Left	Thru	Right	Total	Left	Thru	Right	Total	Left	Thru	Right	Total	15-min	Hour		N	S	W	E
7:00	0	0	0	**0**	0	0	0	**0**	0	0	0	**0**	0	0	0	**0**	**0**			0	0	0	0
7:15	0	3	0	**3**	0	0	0	**0**	0	0	0	**0**	0	0	0	**0**	**3**			0	0	0	0
7:30	0	1	0	**1**	0	1	0	**1**	0	0	0	**0**	0	0	0	**0**	**2**			0	0	0	0
7:45	0	0	0	**0**	0	2	1	**3**	0	0	0	**0**	0	0	0	**0**	**3**	8		0	0	0	0
8:00	0	0	0	**0**	0	1	0	**1**	0	0	0	**0**	0	0	1	**1**	**2**	10		0	0	0	0
8:15	0	0	0	**0**	0	0	0	**0**	0	0	0	**0**	0	0	0	**0**	**0**	7		0	0	0	0
8:30	0	1	0	**1**	0	0	0	**0**	0	0	0	**0**	0	0	0	**0**	**1**	6		0	0	0	0
8:45	0	2	0	**2**	0	1	0	**1**	0	0	0	**0**	0	0	0	**0**	**3**	6		0	0	0	0
9:00	0	1	0	**1**	0	2	0	**2**	0	0	0	**0**	0	0	0	**0**	**3**	7		0	0	0	0
9:15	0	0	0	**0**	0	1	0	**1**	0	0	0	**0**	0	0	0	**0**	**1**	8		0	0	0	0
9:30	0	1	0	**1**	0	0	0	**0**	0	0	0	**0**	1	0	0	**1**	**2**	9		0	0	0	0
9:45	1	2	0	**3**	0	2	0	**2**	0	0	0	**0**	0	0	0	**0**	**5**	11		0	0	0	0
10:00	0	1	0	**1**	0	2	1	**3**	0	0	0	**0**	0	0	0	**0**	**4**	12		0	0	0	0
10:15	0	0	0	**0**	0	0	0	**0**	0	0	0	**0**	0	0	0	**0**	**0**	11		0	0	0	0
10:30	0	1	0	**1**	0	0	0	**0**	0	0	0	**0**	0	0	0	**0**	**1**	10		0	0	0	0
10:45	0	0	0	**0**	0	2	0	**2**	0	0	0	**0**	0	0	0	**0**	**2**	7		0	0	0	0
11:00	1	3	0	**4**	0	1	0	**1**	0	0	0	**0**	0	0	0	**0**	**5**	8	*	0	0	0	0
11:15	0	1	0	**1**	0	2	0	**2**	0	0	0	**0**	0	0	0	**0**	**3**	11	*	0	0	0	0
11:30	0	1	0	**1**	0	2	0	**2**	0	0	0	**0**	0	0	0	**0**	**3**	13	*	0	0	0	0
11:45	0	1	0	**1**	0	2	1	**3**	0	0	0	**0**	1	0	0	**1**	**5**	16	+	0	0	0	0
Total	2	19	0	**21**	0	21	3	**24**	0	0	0	**0**	2	0	1	**3**	**48**			0	0	0	0
12:00	0	0	0	**0**	0	0	0	**0**	0	0	0	**0**	0	0	0	**0**	**0**			0	0	0	0
12:15	0	0	0	**0**	0	1	0	**1**	0	0	0	**0**	0	0	0	**0**	**1**			0	0	0	0
12:30	0	1	0	**1**	0	0	0	**0**	0	0	0	**0**	0	0	0	**0**	**1**			0	0	0	0
12:45	0	1	0	**1**	0	0	1	**1**	0	0	0	**0**	0	0	0	**0**	**2**	4		0	0	0	0
13:00	0	0	0	**0**	0	1	0	**1**	0	0	0	**0**	0	0	0	**0**	**1**	5		0	0	0	0
13:15	0	2	0	**2**	0	1	1	**2**	0	0	0	**0**	0	0	0	**0**	**4**	8		0	0	0	0
13:30	0	0	0	**0**	0	1	0	**1**	0	0	0	**0**	0	0	0	**0**	**1**	8		0	0	0	0
13:45	0	1	0	**1**	0	2	0	**2**	0	0	0	**0**	0	0	0	**0**	**3**	9		0	0	0	0
14:00	0	0	0	**0**	0	1	1	**2**	0	0	0	**0**	0	0	0	**0**	**2**	10	*	0	0	0	0
14:15	0	1	0	**1**	0	0	0	**0**	0	0	0	**0**	0	0	0	**0**	**1**	7	+	0	0	0	0
14:30	1	0	0	**1**	0	0	0	**0**	0	0	0	**0**	0	0	0	**0**	**1**	7	*	0	0	0	0
14:45	0	1	0	**1**	0	0	0	**0**	0	0	0	**0**	0	0	0	**0**	**1**	5	*	0	0	0	0
n/a																							
n/a																							
n/a																							
n/a																							
Total	1	7	0	**8**	0	7	3	**10**	0	0	0	**0**	0	0	0	**0**	**18**			0	0	0	0
n/a																							
n/a																							
n/a																							
n/a																							
n/a																							
n/a																							
n/a																							
n/a																							
n/a																							
n/a																							
n/a																							
n/a																							
n/a																							
n/a																							
n/a																							
n/a																							
n/a																							
n/a																							
Total																							

AM Peak Period
Dump Trucks

3rd Avenue @ Redford Street
Tuesday, September 26, 2017

Time Period Begins	Redford St NORTH Approach				Redford St SOUTH Approach				3rd Ave WEST Approach				3rd Ave EAST Approach				Total Volume		Peak					Conflict	
	Left	Thru	Right	Total	Left	Thru	Right	Total	Left	Thru	Right	Total	Left	Thru	Right	Total	15-min	Hour		N	S	W	E	15 min	Hr
7:00	0	0	0	0	0	0	0	0	0	0	0	0	0	0	0	0	0			0	0	0	0	0	
7:15	0	3	0	3	0	0	0	0	0	0	0	0	0	0	0	0	3			0	0	0	0	3	
7:30	0	1	0	1	0	1	0	1	0	0	0	0	0	0	0	0	2			0	0	0	0	1	
7:45	0	0	0	0	0	2	1	3	0	0	0	0	0	0	0	0	3	8		0	0	0	0	3	7
8:00	0	0	0	0	0	1	0	1	0	0	0	0	0	0	1	1	2	10		0	0	0	0	2	9
8:15	0	0	0	0	0	0	0	0	0	0	0	0	0	0	0	0	0	7		0	0	0	0	0	6
8:30	0	1	0	1	0	0	0	0	0	0	0	0	0	0	0	0	1	6		0	0	0	0	1	6
8:45	0	2	0	2	0	1	0	1	0	0	0	0	0	0	0	0	3	6		0	0	0	0	2	5
9:00	0	1	0	1	0	2	0	2	0	0	0	0	0	0	0	0	3	7		0	0	0	0	2	5
9:15	0	0	0	0	0	1	0	1	0	0	0	0	0	0	0	0	1	8		0	0	0	0	1	6
9:30	0	1	0	1	0	0	0	0	0	0	0	0	1	0	0	1	2	9		0	0	0	0	2	7
9:45	1	2	0	3	0	2	0	2	0	0	0	0	0	0	0	0	5	11		0	0	0	0	3	8
10:00	0	1	0	1	0	2	1	3	0	0	0	0	0	0	0	0	4	12		0	0	0	0	3	9
10:15	0	0	0	0	0	0	0	0	0	0	0	0	0	0	0	0	0	11		0	0	0	0	0	8
10:30	0	1	0	1	0	0	0	0	0	0	0	0	0	0	0	0	1	10		0	0	0	0	1	7
10:45	0	0	0	0	0	2	0	2	0	0	0	0	0	0	0	0	2	7		0	0	0	0	2	6
11:00	1	3	0	4	0	1	0	1	0	0	0	0	0	0	0	0	5	8	*	0	0	0	0	3	6
11:15	0	1	0	1	0	2	0	2	0	0	0	0	0	0	0	0	3	11	*	0	0	0	0	2	8
11:30	0	1	0	1	0	2	0	2	0	0	0	0	0	0	0	0	3	13	*	0	0	0	0	2	9
11:45	0	1	0	1	0	2	1	3	0	0	0	0	1	0	0	1	5	16	+	0	0	0	0	4	11
Total	2	19	0	**21**	0	21	3	**24**	0	0	0	**0**	2	0	1	**3**	48			0	0	0	0		28
Avg Hr	0	4	0	**4**	0	4	1	**5**	0	0	0	**0**	0	0	0	**1**	10			0	0	0	0		

Peak hour of the intersection

Pk Hr	1	6	0	7	0	7	1	8	0	0	0	0	1	0	0	1	16	*		0	0	0	0		10
15x4	4	12	0	16	0	8	4	12	0	0	0	0	4	0	0	4	20	+		0	0	0	0		20
PHF	0.25	0.50	n/a	**0.44**	n/a	0.88	0.25	**0.67**	n/a	n/a	n/a	**n/a**	0.25	n/a	n/a	**0.25**	0.80			n/a	n/a	n/a	n/a		0.50

Peak hour of conflicting volumes for the intersection

Pk Hr	1	6	0	7	0	7	1	8	0	0	0	0	1	0	0	1	16	*		0	0	0	0		10
15x4	4	12	0	16	0	8	4	12	0	0	0	0	4	0	0	4	20	+		0	0	0	0		20
PHF	0.25	0.50	n/a	**0.44**	n/a	0.88	0.25	**0.67**	n/a	n/a	n/a	**n/a**	0.25	n/a	n/a	**0.25**	0.80			n/a	n/a	n/a	n/a		0.50

** Calculated peak hour occurs during the first or last hour of shift and therefore may be invalid. **

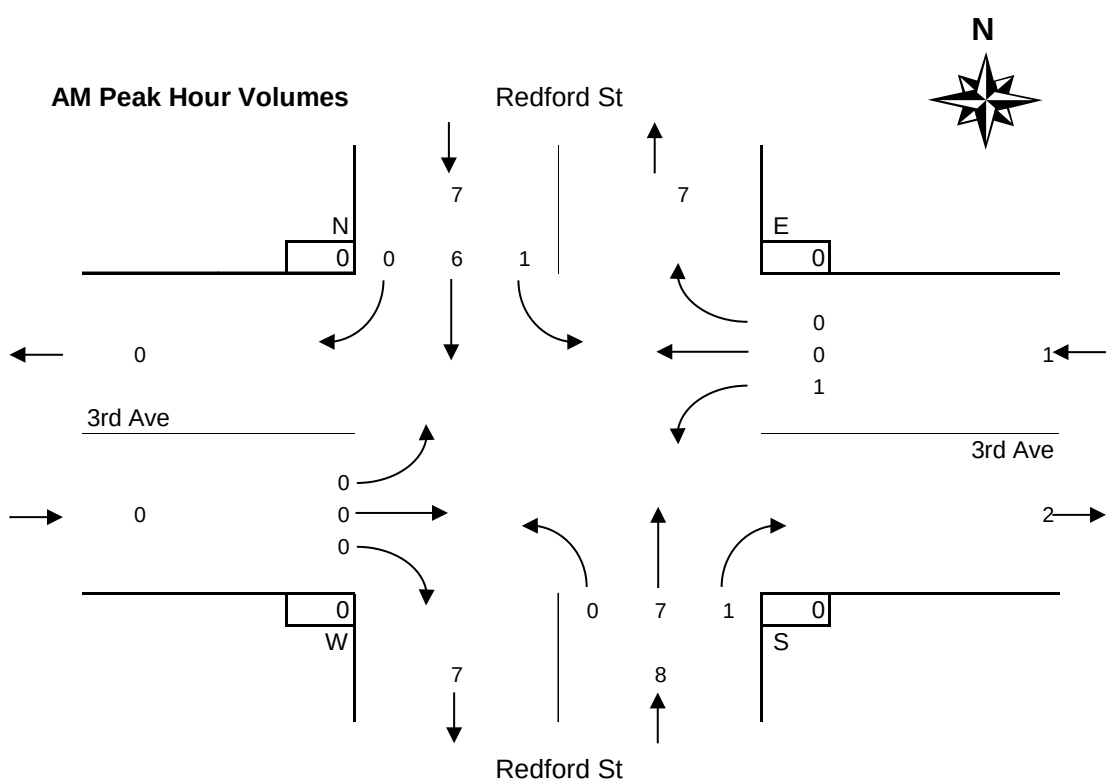

MD Peak Period
Dump Trucks

3rd Avenue @ Redford Street
Tuesday, September 26, 2017

Time Period Begins	Redford St NORTH Approach				Redford St SOUTH Approach				3rd Ave WEST Approach				3rd Ave EAST Approach				Total Volume		Peak					Conflict	
	Left	Thru	Right	Total	Left	Thru	Right	Total	Left	Thru	Right	Total	Left	Thru	Right	Total	15-min	Hour		N	S	W	E	15 min	Hr
12:00	0	0	0	0	0	0	0	0	0	0	0	0	0	0	0	0	0			0	0	0	0	0	
12:15	0	0	0	0	0	1	0	1	0	0	0	0	0	0	0	0	1			0	0	0	0	1	
12:30	0	1	0	1	0	0	0	0	0	0	0	0	0	0	0	0	1			0	0	0	0	1	
12:45	0	1	0	1	0	0	1	1	0	0	0	0	0	0	0	0	2	4		0	0	0	0	1	3
13:00	0	0	0	0	0	1	0	1	0	0	0	0	0	0	0	0	1	5		0	0	0	0	1	4
13:15	0	2	0	2	0	1	1	2	0	0	0	0	0	0	0	0	4	8		0	0	0	0	2	5
13:30	0	0	0	0	0	1	0	1	0	0	0	0	0	0	0	0	1	8		0	0	0	0	1	5
13:45	0	1	0	1	0	2	0	2	0	0	0	0	0	0	0	0	3	9		0	0	0	0	2	6
14:00	0	0	0	0	0	1	1	2	0	0	0	0	0	0	0	0	2	10	*	0	0	0	0	2	7
14:15	0	1	0	1	0	0	0	0	0	0	0	0	0	0	0	0	1	7	+	0	0	0	0	1	6
14:30	1	0	0	1	0	0	0	0	0	0	0	0	0	0	0	0	1	7	*	0	0	0	0	1	6
14:45	0	1	0	1	0	0	0	0	0	0	0	0	0	0	0	0	1	5	*	0	0	0	0	1	5
n/a																									
n/a																									
n/a																									
n/a																									
Total	1	7	0	**8**	0	7	3	**10**	0	0	0	**0**	0	0	0	**0**	18			0	0	0	0		11
Avg Hr	0	2	0	**3**	0	2	1	**3**	0	0	0	**0**	0	0	0	**0**	6			0	0	0	0		

Peak hour of the intersection

Pk Hr	1	2	0	3	0	1	1	2	0	0	0	0	0	0	0	0	5	*		0	0	0	0		3
15x4	4	4	0	4	0	4	4	8	0	0	0	0	0	0	0	0	8	+		0	0	0	0		12
PHF	0.25	0.50	n/a	**0.75**	n/a	0.25	0.25	**0.25**	n/a	n/a	n/a	**n/a**	n/a	n/a	n/a	**n/a**	0.63			n/a	n/a	n/a	n/a		0.25

Peak hour of conflicting volumes for the intersection

Pk Hr	1	2	0	3	0	1	1	2	0	0	0	0	0	0	0	0	5	*		0	0	0	0		3
15x4	4	4	0	4	0	4	4	8	0	0	0	0	0	0	0	0	8	+		0	0	0	0		12
PHF	0.25	0.50	n/a	**0.75**	n/a	0.25	0.25	**0.25**	n/a	n/a	n/a	**n/a**	n/a	n/a	n/a	**n/a**	0.63			n/a	n/a	n/a	n/a		0.25

** Calculated peak hour occurs during the first or last hour of shift and therefore may be invalid. **

MD Peak Hour Volumes

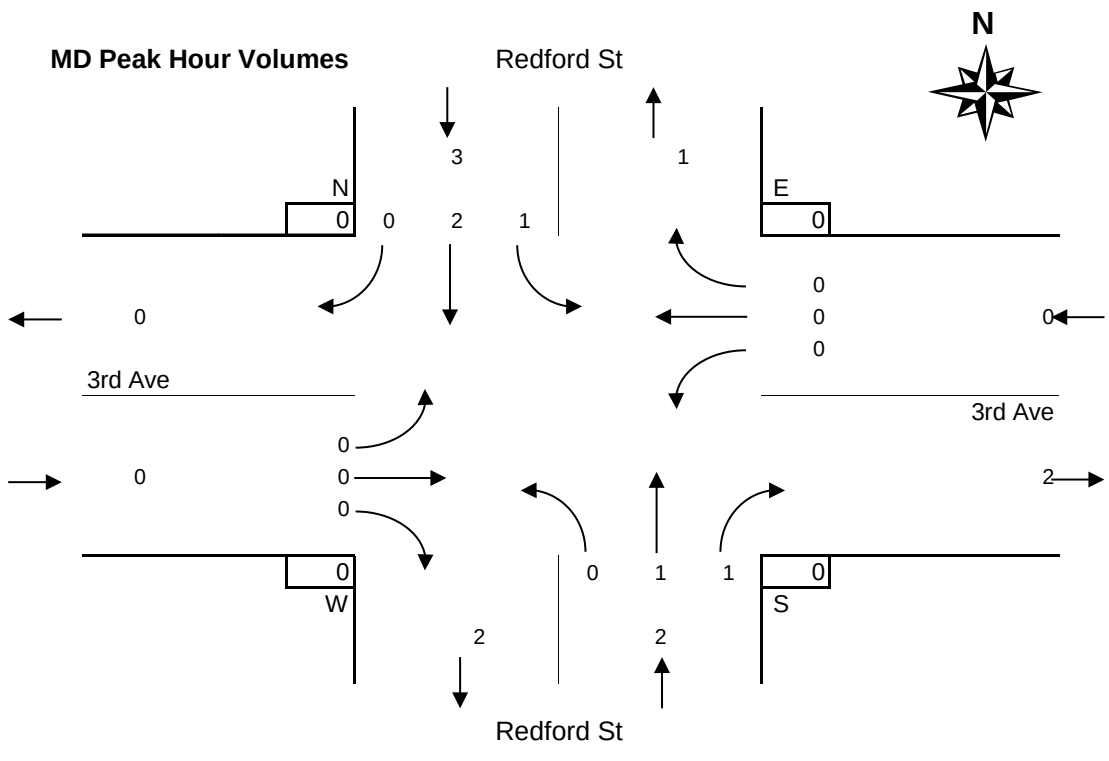

PM Peak Period
Dump Trucks

3rd Avenue @ Redford Street
Tuesday, September 26, 2017

Time Period Begins	Redford St NORTH Approach				Redford St SOUTH Approach				3rd Ave WEST Approach				3rd Ave EAST Approach				Total Volume		Peak					Conflict	
	Left	Thru	Right	Total	Left	Thru	Right	Total	Left	Thru	Right	Total	Left	Thru	Right	Total	15-min	Hour		N	S	W	E	15 min	Hr
n/a																									
n/a																									
n/a																									
n/a																									
n/a																									
n/a																									
n/a																									
n/a																									
n/a																									
n/a																									
n/a																									
n/a																									
n/a																									
n/a																									
n/a																									
n/a																									
n/a																									
n/a																									
n/a																									
Total																									0
Avg Hr																									

Peak hour of the intersection

Pk Hr																		*							0
15x4																		+							0
PHF																									n/a

Peak hour of conflicting volumes for the intersection

Pk Hr																		*							0
15x4																		+							0
PHF																									n/a

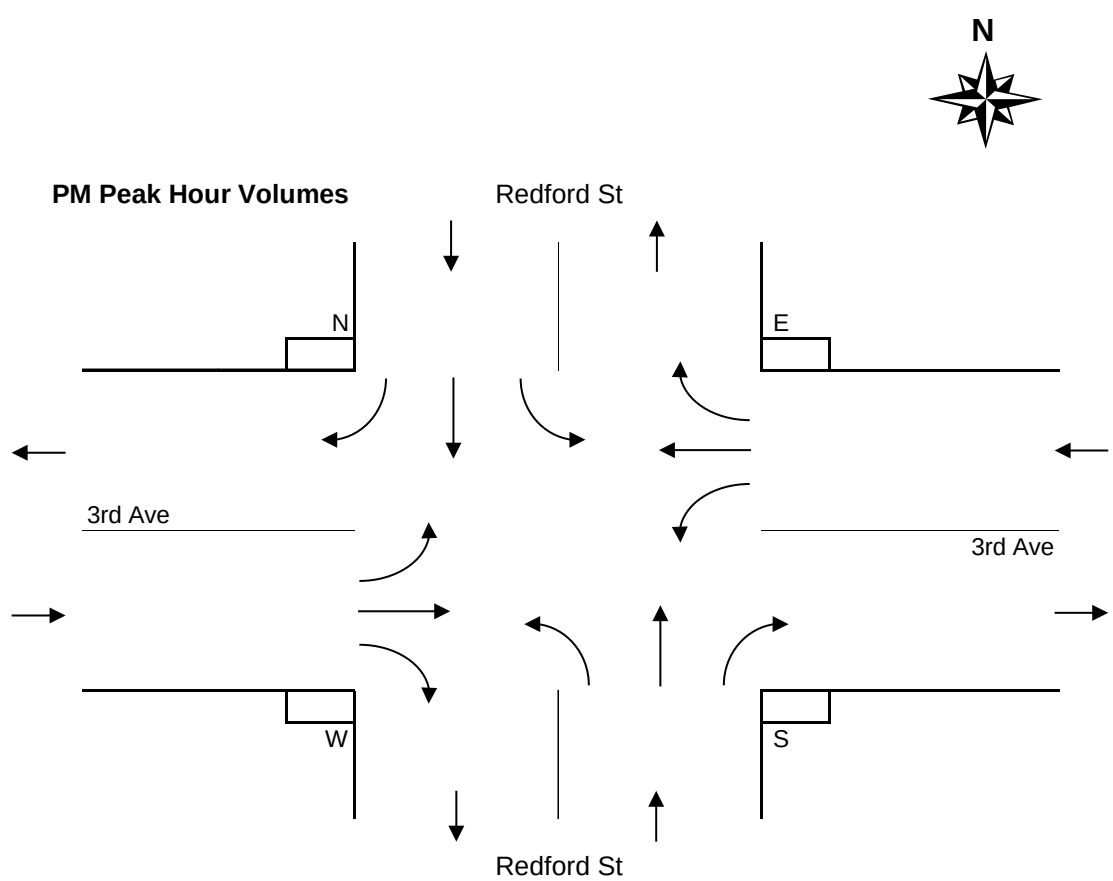

Period Hourly Averages
Dump Trucks

3rd Avenue @ Redford Street
Tuesday, September 26, 2017

Entire Survey Period
8 Hours

	Redford St				Redford St				3rd Ave				3rd Ave							
	NORTH Approach				SOUTH Approach				WEST Approach				EAST Approach				Total			
	Left	Thru	Right	Total	Left	Thru	Right	Total	Left	Thru	Right	Total	Left	Thru	Right	Total	Volume	N	S	W	E
Total	3	26	0	**29**	0	28	6	**34**	0	0	0	**0**	2	0	1	**3**	66	0	0	0	0
Avg Hr	0	3	0	**4**	0	4	1	**4**	0	0	0	**0**	0	0	0	**0**	8	0	0	0	0

AM Peak Period
5 Hours

	Redford St				Redford St				3rd Ave				3rd Ave							
	NORTH Approach				SOUTH Approach				WEST Approach				EAST Approach				Total			
Totals	Left	Thru	Right	Total	Left	Thru	Right	Total	Left	Thru	Right	Total	Left	Thru	Right	Total	Volume	N	S	W	E
Period	2	19	0	**21**	0	21	3	**24**	0	0	0	**0**	2	0	1	**3**	48	0	0	0	0
Avg Hr	0	4	0	**4**	0	4	1	**5**	0	0	0	**0**	0	0	0	**1**	10	0	0	0	0

MD Peak Period
3 Hours

	Redford St				Redford St				3rd Ave				3rd Ave							
	NORTH Approach				SOUTH Approach				WEST Approach				EAST Approach				Total			
Totals	Left	Thru	Right	Total	Left	Thru	Right	Total	Left	Thru	Right	Total	Left	Thru	Right	Total	Volume	N	S	W	E
Total	1	7	0	**8**	0	7	3	**10**	0	0	0	**0**	0	0	0	**0**	18	0	0	0	0
Avg Hr	0	2	0	**3**	0	2	1	**3**	0	0	0	**0**	0	0	0	**0**	6	0	0	0	0

PM Peak Period
Hours

	Redford St				Redford St				3rd Ave				3rd Ave							
	NORTH Approach				SOUTH Approach				WEST Approach				EAST Approach				Total			
Totals	Left	Thru	Right	Total	Left	Thru	Right	Total	Left	Thru	Right	Total	Left	Thru	Right	Total	Volume	N	S	W	E
Total																				
Avg Hr																				

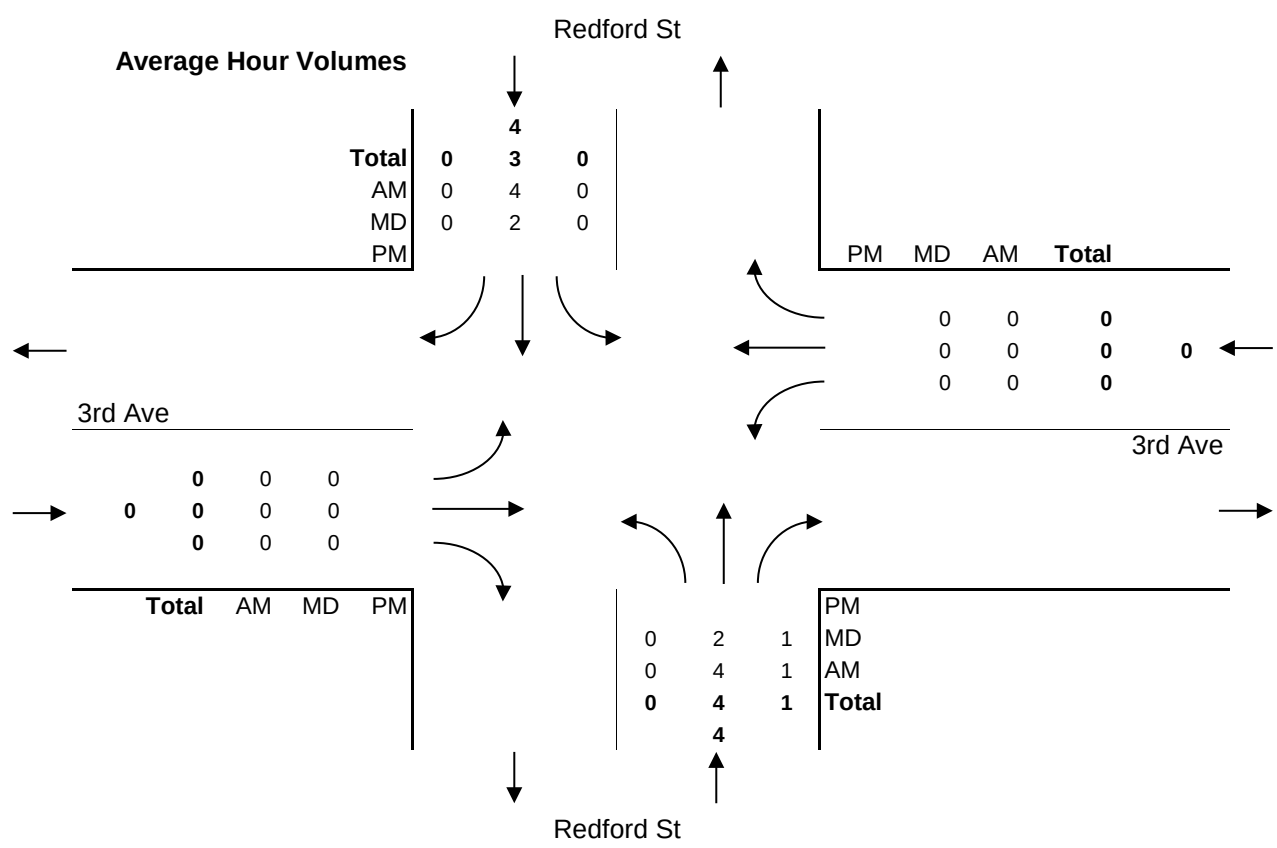

Vehicle Turning Movement Survey
With Classification

Major Route: 3rd Avenue
Minor Route: Redford Street
Municipality: Port Alberni
Filename: 1-3rd Ave @ Redford St-Sep 26, 2017.xlsx
Location #: 1

Date: September 26, 2017
Day-of-week: Tuesday

East/West Route: 3rd Avenue
Intersection Type: 4-leg
Signalized?: Yes
Weather: Clear and dry

Vehicle Classifications: Regular Vehicles
Buses
Articulated Trucks
Cube Trucks
Dump Trucks
Emergency Trucks
Garbage Trucks
Logging Trucks
RVs
Utility Trucks

This data is for Emergency Trucks

Shift	Start	End	Duration
AM	7:00	12:00	5.00
MD	12:00	15:00	3.00
PM			
Total	**7:00**		**8.00**

Notes: 24-hour clock used for reporting (15-minute increments)
North Approach - southbound vehicles approaching intersection from the north
15x4 - 15 min volume (from maximum 15 minute period of movement/approach in peak hour period [*]) x 4
Pedestrians - N indicates pedestrians crossing north approach (east/west)

Comments:

Survey Data
Emergency Trucks

3rd Avenue @ Redford Street
Tuesday, September 26, 2017

Time Period Begins	Redford St NORTH Approach				Redford St SOUTH Approach				3rd Ave WEST Approach				3rd Ave EAST Approach				Total Volume		Peak				
	Left	Thru	Right	Total	Left	Thru	Right	Total	Left	Thru	Right	Total	Left	Thru	Right	Total	15-min	Hour		N	S	W	E
7:00	0	0	0	**0**	0	0	0	**0**	0	0	0	**0**	0	0	0	**0**	**0**			0	0	0	0
7:15	0	0	0	**0**	0	0	0	**0**	0	0	0	**0**	0	0	0	**0**	**0**			0	0	0	0
7:30	0	0	0	**0**	0	0	0	**0**	0	0	0	**0**	0	0	0	**0**	**0**			0	0	0	0
7:45	0	0	0	**0**	0	0	0	**0**	0	0	0	**0**	0	0	0	**0**	**0**	0		0	0	0	0
8:00	0	0	0	**0**	0	0	0	**0**	0	0	0	**0**	0	0	0	**0**	**0**	0		0	0	0	0
8:15	0	0	0	**0**	0	0	0	**0**	0	0	0	**0**	0	0	0	**0**	**0**	0		0	0	0	0
8:30	0	0	0	**0**	0	0	0	**0**	0	0	0	**0**	0	0	0	**0**	**0**	0		0	0	0	0
8:45	0	0	0	**0**	0	1	0	**1**	0	0	0	**0**	0	0	0	**0**	**1**	1		0	0	0	0
9:00	0	0	0	**0**	0	0	0	**0**	0	0	0	**0**	0	0	0	**0**	**0**	1		0	0	0	0
9:15	0	0	0	**0**	0	0	0	**0**	0	0	0	**0**	0	0	0	**0**	**0**	1		0	0	0	0
9:30	0	0	0	**0**	0	0	0	**0**	0	0	0	**0**	0	0	0	**0**	**0**	1		0	0	0	0
9:45	0	0	0	**0**	0	0	0	**0**	0	0	0	**0**	0	0	0	**0**	**0**	0		0	0	0	0
10:00	0	0	0	**0**	0	0	0	**0**	0	0	0	**0**	0	0	0	**0**	**0**	0		0	0	0	0
10:15	0	0	0	**0**	0	0	0	**0**	0	0	0	**0**	0	0	0	**0**	**0**	0		0	0	0	0
10:30	0	0	0	**0**	0	0	0	**0**	0	0	0	**0**	0	0	0	**0**	**0**	0		0	0	0	0
10:45	0	0	0	**0**	0	0	0	**0**	0	0	0	**0**	0	0	0	**0**	**0**	0		0	0	0	0
11:00	0	0	0	**0**	0	0	0	**0**	0	0	0	**0**	0	0	0	**0**	**0**	0	*	0	0	0	0
11:15	0	0	0	**0**	0	0	0	**0**	0	0	0	**0**	0	0	0	**0**	**0**	0	*	0	0	0	0
11:30	0	0	0	**0**	0	0	0	**0**	0	0	0	**0**	0	0	0	**0**	**0**	0	*	0	0	0	0
11:45	0	0	0	**0**	0	0	0	**0**	0	0	0	**0**	0	0	0	**0**	**0**	0	+	0	0	0	0
Total	0	0	0	**0**	0	1	0	**1**	0	0	0	**0**	0	0	0	**0**	**1**			0	0	0	0
12:00	0	0	0	**0**	0	0	0	**0**	0	0	0	**0**	0	0	0	**0**	**0**			0	0	0	0
12:15	0	0	0	**0**	0	0	0	**0**	0	0	0	**0**	0	0	0	**0**	**0**			0	0	0	0
12:30	0	0	0	**0**	0	0	0	**0**	0	0	0	**0**	0	0	1	**1**	**1**			0	0	0	0
12:45	0	0	0	**0**	0	0	0	**0**	0	0	0	**0**	0	0	0	**0**	**0**	1		0	0	0	0
13:00	0	0	0	**0**	0	0	0	**0**	0	0	0	**0**	0	0	0	**0**	**0**	1		0	0	0	0
13:15	0	0	0	**0**	0	0	0	**0**	0	0	0	**0**	0	0	0	**0**	**0**	1		0	0	0	0
13:30	0	0	0	**0**	0	0	0	**0**	0	0	0	**0**	0	0	0	**0**	**0**	0		0	0	0	0
13:45	0	0	0	**0**	0	0	0	**0**	0	0	0	**0**	0	0	0	**0**	**0**	0		0	0	0	0
14:00	0	0	0	**0**	0	0	0	**0**	0	0	0	**0**	0	0	0	**0**	**0**	0	*	0	0	0	0
14:15	0	0	0	**0**	0	0	0	**0**	0	0	0	**0**	0	0	0	**0**	**0**	0	+	0	0	0	0
14:30	0	0	0	**0**	0	0	0	**0**	0	0	0	**0**	0	0	0	**0**	**0**	0	*	0	0	0	0
14:45	0	0	0	**0**	0	0	0	**0**	0	0	0	**0**	0	0	0	**0**	**0**	0	*	0	0	0	0
n/a																							
n/a																							
n/a																							
n/a																							
Total	0	0	0	**0**	0	0	0	**0**	0	0	0	**0**	0	0	1	**1**	**1**			0	0	0	0
n/a																							
n/a																							
n/a																							
n/a																							
n/a																							
n/a																							
n/a																							
n/a																							
n/a																							
n/a																							
n/a																							
n/a																							
n/a																							
n/a																							
n/a																							
n/a																							
n/a																							
n/a																							
Total																							

AM Peak Period
Emergency Trucks

3rd Avenue @ Redford Street
Tuesday, September 26, 2017

Time Period Begins	Redford St NORTH Approach				Redford St SOUTH Approach				3rd Ave WEST Approach				3rd Ave EAST Approach				Total Volume		Peak					Conflict	
	Left	Thru	Right	Total	Left	Thru	Right	Total	Left	Thru	Right	Total	Left	Thru	Right	Total	15-min	Hour		N	S	W	E	15 min	Hr
7:00	0	0	0	0	0	0	0	0	0	0	0	0	0	0	0	0	0			0	0	0	0	0	
7:15	0	0	0	0	0	0	0	0	0	0	0	0	0	0	0	0	0			0	0	0	0	0	
7:30	0	0	0	0	0	0	0	0	0	0	0	0	0	0	0	0	0			0	0	0	0	0	
7:45	0	0	0	0	0	0	0	0	0	0	0	0	0	0	0	0	0	0		0	0	0	0	0	0
8:00	0	0	0	0	0	0	0	0	0	0	0	0	0	0	0	0	0	0		0	0	0	0	0	0
8:15	0	0	0	0	0	0	0	0	0	0	0	0	0	0	0	0	0	0		0	0	0	0	0	0
8:30	0	0	0	0	0	0	0	0	0	0	0	0	0	0	0	0	0	0		0	0	0	0	0	0
8:45	0	0	0	0	0	1	0	1	0	0	0	0	0	0	0	0	1	1		0	0	0	0	1	1
9:00	0	0	0	0	0	0	0	0	0	0	0	0	0	0	0	0	0	1		0	0	0	0	0	1
9:15	0	0	0	0	0	0	0	0	0	0	0	0	0	0	0	0	0	1		0	0	0	0	0	1
9:30	0	0	0	0	0	0	0	0	0	0	0	0	0	0	0	0	0	1		0	0	0	0	0	1
9:45	0	0	0	0	0	0	0	0	0	0	0	0	0	0	0	0	0	0		0	0	0	0	0	0
10:00	0	0	0	0	0	0	0	0	0	0	0	0	0	0	0	0	0	0		0	0	0	0	0	0
10:15	0	0	0	0	0	0	0	0	0	0	0	0	0	0	0	0	0	0		0	0	0	0	0	0
10:30	0	0	0	0	0	0	0	0	0	0	0	0	0	0	0	0	0	0		0	0	0	0	0	0
10:45	0	0	0	0	0	0	0	0	0	0	0	0	0	0	0	0	0	0		0	0	0	0	0	0
11:00	0	0	0	0	0	0	0	0	0	0	0	0	0	0	0	0	0	0	*	0	0	0	0	0	0
11:15	0	0	0	0	0	0	0	0	0	0	0	0	0	0	0	0	0	0	*	0	0	0	0	0	0
11:30	0	0	0	0	0	0	0	0	0	0	0	0	0	0	0	0	0	0	*	0	0	0	0	0	0
11:45	0	0	0	0	0	0	0	0	0	0	0	0	0	0	0	0	0	0	+	0	0	0	0	0	0
Total	0	0	0	**0**	0	1	0	**1**	0	0	0	**0**	0	0	0	**0**	1			0	0	0	0		1
Avg Hr	0	0	0	**0**	0	0	0	**0**	0	0	0	**0**	0	0	0	**0**	0			0	0	0	0		

Peak hour of the intersection

Pk Hr	0	0	0	0	0	0	0	0	0	0	0	0	0	0	0	0	0	*		0	0	0	0		0
15x4	0	0	0	0	0	0	0	0	0	0	0	0	0	0	0	0	0	+		0	0	0	0		0
PHF	n/a	n/a	n/a	**n/a**	n/a	n/a	n/a	**n/a**	n/a	n/a	n/a	**n/a**	n/a	n/a	n/a	**n/a**	n/a			n/a	n/a	n/a	n/a		n/a

Peak hour of conflicting volumes for the intersection

Pk Hr	0	0	0	0	0	0	0	0	0	0	0	0	0	0	0	0	0	*		0	0	0	0		0
15x4	0	0	0	0	0	0	0	0	0	0	0	0	0	0	0	0	0	+		0	0	0	0		0
PHF	n/a	n/a	n/a	**n/a**	n/a	n/a	n/a	**n/a**	n/a	n/a	n/a	**n/a**	n/a	n/a	n/a	**n/a**	n/a			n/a	n/a	n/a	n/a		n/a

** Calculated peak hour occurs during the first or last hour of shift and therefore may be invalid. **

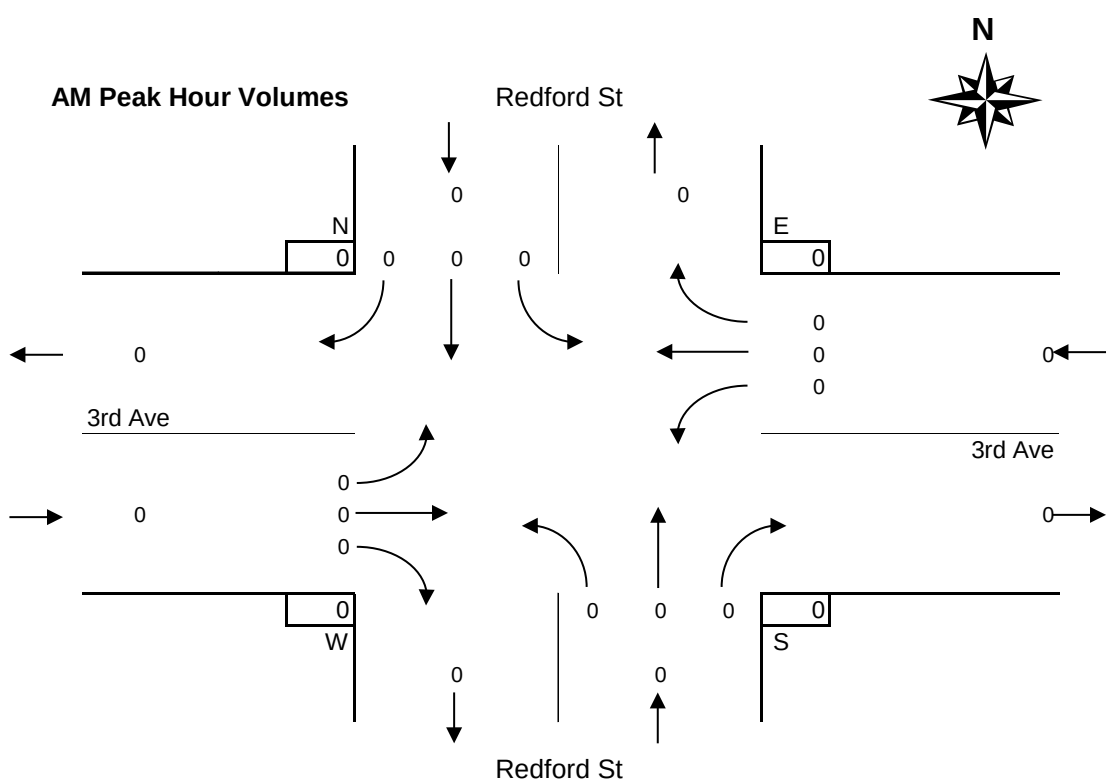

MD Peak Period
Emergency Trucks

3rd Avenue @ Redford Street
Tuesday, September 26, 2017

Time Period Begins	Redford St NORTH Approach				Redford St SOUTH Approach				3rd Ave WEST Approach				3rd Ave EAST Approach				Total Volume		Peak					Conflict	
	Left	Thru	Right	Total	Left	Thru	Right	Total	Left	Thru	Right	Total	Left	Thru	Right	Total	15-min	Hour		N	S	W	E	15 min	Hr
12:00	0	0	0	0	0	0	0	0	0	0	0	0	0	0	0	0	0			0	0	0	0	0	
12:15	0	0	0	0	0	0	0	0	0	0	0	0	0	0	0	0	0			0	0	0	0	0	
12:30	0	0	0	0	0	0	0	0	0	0	0	0	0	0	1	1	1			0	0	0	0	1	
12:45	0	0	0	0	0	0	0	0	0	0	0	0	0	0	0	0	0	1		0	0	0	0	0	1
13:00	0	0	0	0	0	0	0	0	0	0	0	0	0	0	0	0	0	1		0	0	0	0	0	1
13:15	0	0	0	0	0	0	0	0	0	0	0	0	0	0	0	0	0	1		0	0	0	0	0	1
13:30	0	0	0	0	0	0	0	0	0	0	0	0	0	0	0	0	0	0		0	0	0	0	0	0
13:45	0	0	0	0	0	0	0	0	0	0	0	0	0	0	0	0	0	0		0	0	0	0	0	0
14:00	0	0	0	0	0	0	0	0	0	0	0	0	0	0	0	0	0	0	*	0	0	0	0	0	0
14:15	0	0	0	0	0	0	0	0	0	0	0	0	0	0	0	0	0	0	+	0	0	0	0	0	0
14:30	0	0	0	0	0	0	0	0	0	0	0	0	0	0	0	0	0	0	*	0	0	0	0	0	0
14:45	0	0	0	0	0	0	0	0	0	0	0	0	0	0	0	0	0	0	*	0	0	0	0	0	0
n/a																									
n/a																									
n/a																									
n/a																									
Total	0	0	0	**0**	0	0	0	**0**	0	0	0	**0**	0	0	1	**1**	1			0	0	0	0		1
Avg Hr	0	0	0	**0**	0	0	0	**0**	0	0	0	**0**	0	0	0	**0**	0			0	0	0	0		

Peak hour of the intersection

Pk Hr	0	0	0	0	0	0	0	0	0	0	0	0	0	0	0	0	0	*		0	0	0	0		0
15x4	0	0	0	0	0	0	0	0	0	0	0	0	0	0	0	0	0	+		0	0	0	0		0
PHF	n/a	n/a	n/a	**n/a**	n/a	n/a	n/a	**n/a**	n/a	n/a	n/a	**n/a**	n/a	n/a	n/a	**n/a**	n/a			n/a	n/a	n/a	n/a		n/a

Peak hour of conflicting volumes for the intersection

Pk Hr	0	0	0	0	0	0	0	0	0	0	0	0	0	0	0	0	0	*		0	0	0	0		0
15x4	0	0	0	0	0	0	0	0	0	0	0	0	0	0	0	0	0	+		0	0	0	0		0
PHF	n/a	n/a	n/a	**n/a**	n/a	n/a	n/a	**n/a**	n/a	n/a	n/a	**n/a**	n/a	n/a	n/a	**n/a**	n/a			n/a	n/a	n/a	n/a		n/a

** Calculated peak hour occurs during the first or last hour of shift and therefore may be invalid. **

MD Peak Hour Volumes

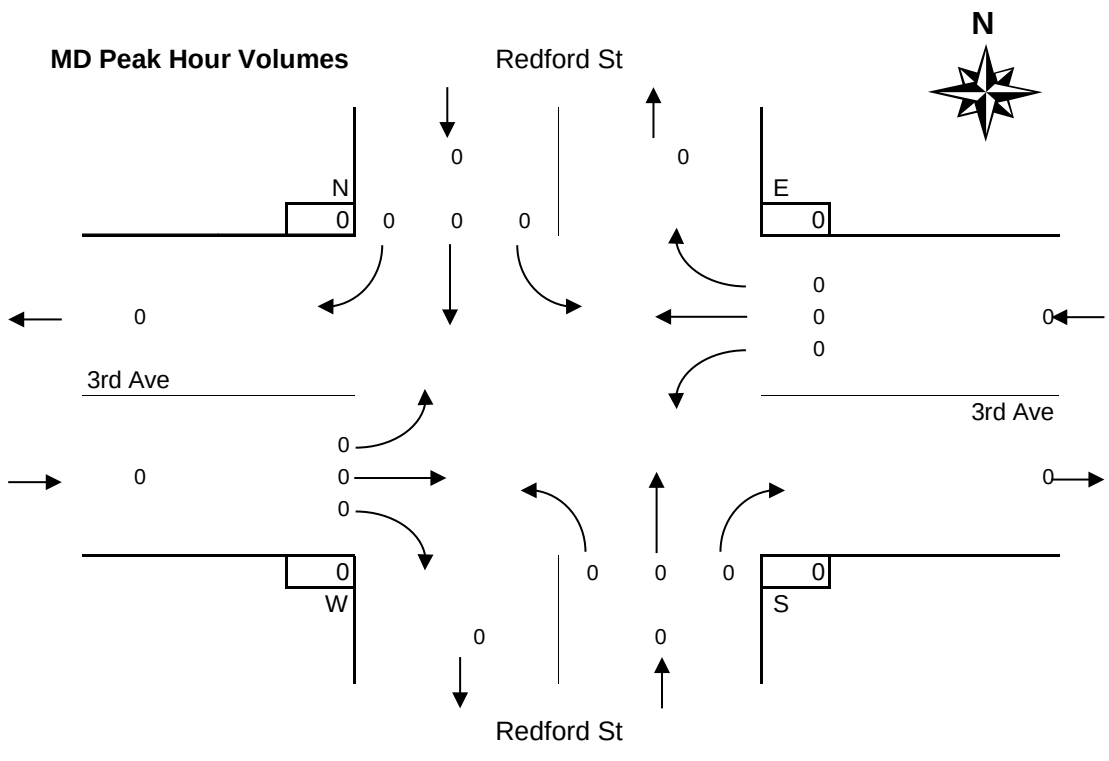

PM Peak Period
Emergency Trucks

3rd Avenue @ Redford Street
Tuesday, September 26, 2017

Time Period Begins	Redford St NORTH Approach				Redford St SOUTH Approach				3rd Ave WEST Approach				3rd Ave EAST Approach				Total Volume		Peak					Conflict	
	Left	Thru	Right	Total	Left	Thru	Right	Total	Left	Thru	Right	Total	Left	Thru	Right	Total	15-min	Hour		N	S	W	E	15 min	Hr
n/a																									
n/a																									
n/a																									
n/a																									
n/a																									
n/a																									
n/a																									
n/a																									
n/a																									
n/a																									
n/a																									
n/a																									
n/a																									
n/a																									
n/a																									
n/a																									
n/a																									
n/a																									
n/a																									
Total																									0
Avg Hr																									

Peak hour of the intersection

Pk Hr																		*							0
15x4																		+							0
PHF																									n/a

Peak hour of conflicting volumes for the intersection

Pk Hr																		*							0
15x4																		+							0
PHF																									n/a

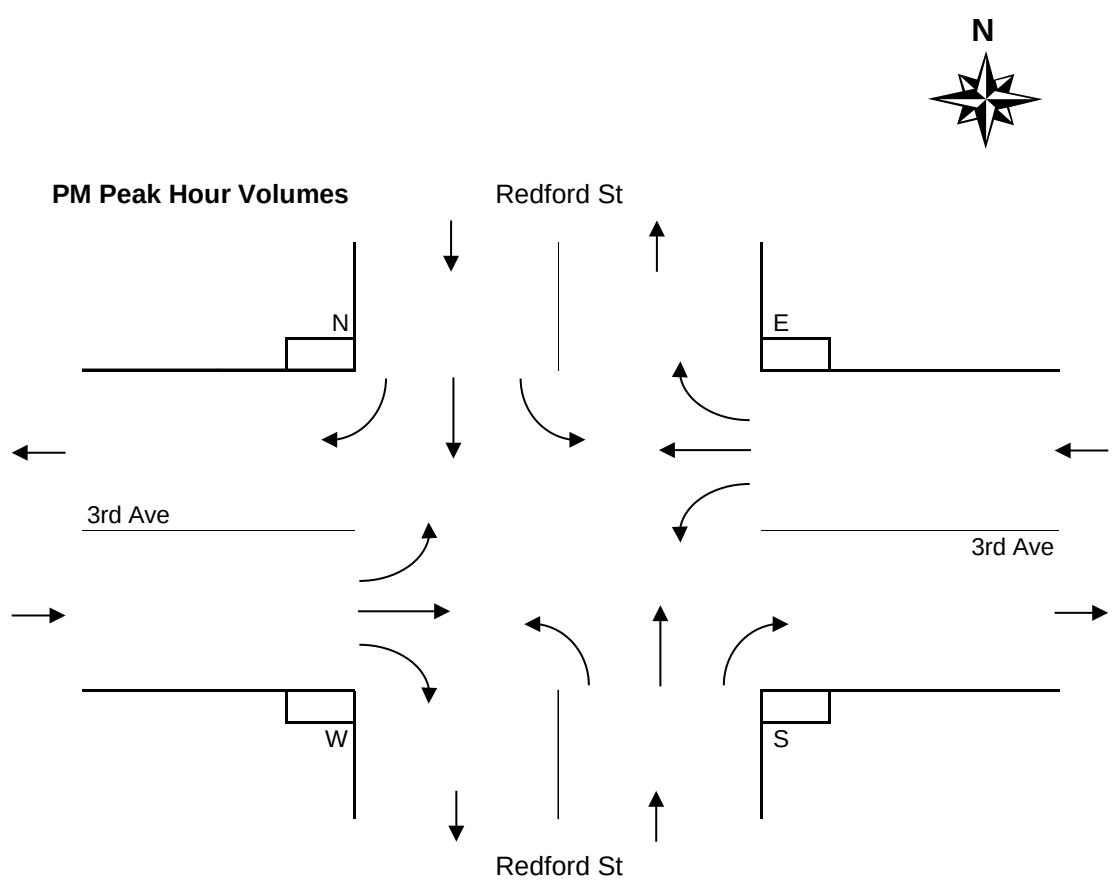

Period Hourly Averages
Emergency Trucks

3rd Avenue @ Redford Street
Tuesday, September 26, 2017

Entire Survey Period

8 Hours

	Redford St				Redford St				3rd Ave				3rd Ave							
	NORTH Approach				SOUTH Approach				WEST Approach				EAST Approach				Total			
	Left	Thru	Right	Total	Left	Thru	Right	Total	Left	Thru	Right	Total	Left	Thru	Right	Total	Volume	N	S	W	E
Total	0	0	0	**0**	0	1	0	**1**	0	0	0	**0**	0	0	1	**1**	2	0	0	0	0
Avg Hr	0	0	0	**0**	0	0	0	**0**	0	0	0	**0**	0	0	0	**0**	0	0	0	0	0

AM Peak Period

5 Hours

	Redford St				Redford St				3rd Ave				3rd Ave							
	NORTH Approach				SOUTH Approach				WEST Approach				EAST Approach				Total			
Totals	Left	Thru	Right	Total	Left	Thru	Right	Total	Left	Thru	Right	Total	Left	Thru	Right	Total	Volume	N	S	W	E
Period	0	0	0	**0**	0	1	0	**1**	0	0	0	**0**	0	0	0	**0**	1	0	0	0	0
Avg Hr	0	0	0	**0**	0	0	0	**0**	0	0	0	**0**	0	0	0	**0**	0	0	0	0	0

MD Peak Period

3 Hours

	Redford St				Redford St				3rd Ave				3rd Ave							
	NORTH Approach				SOUTH Approach				WEST Approach				EAST Approach				Total			
Totals	Left	Thru	Right	Total	Left	Thru	Right	Total	Left	Thru	Right	Total	Left	Thru	Right	Total	Volume	N	S	W	E
Total	0	0	0	**0**	0	0	0	**0**	0	0	0	**0**	0	0	1	**1**	1	0	0	0	0
Avg Hr	0	0	0	**0**	0	0	0	**0**	0	0	0	**0**	0	0	0	**0**	0	0	0	0	0

PM Peak Period

Hours

	Redford St				Redford St				3rd Ave				3rd Ave							
	NORTH Approach				SOUTH Approach				WEST Approach				EAST Approach				Total			
Totals	Left	Thru	Right	Total	Left	Thru	Right	Total	Left	Thru	Right	Total	Left	Thru	Right	Total	Volume	N	S	W	E
Total																				
Avg Hr																				

Average Hour Volumes

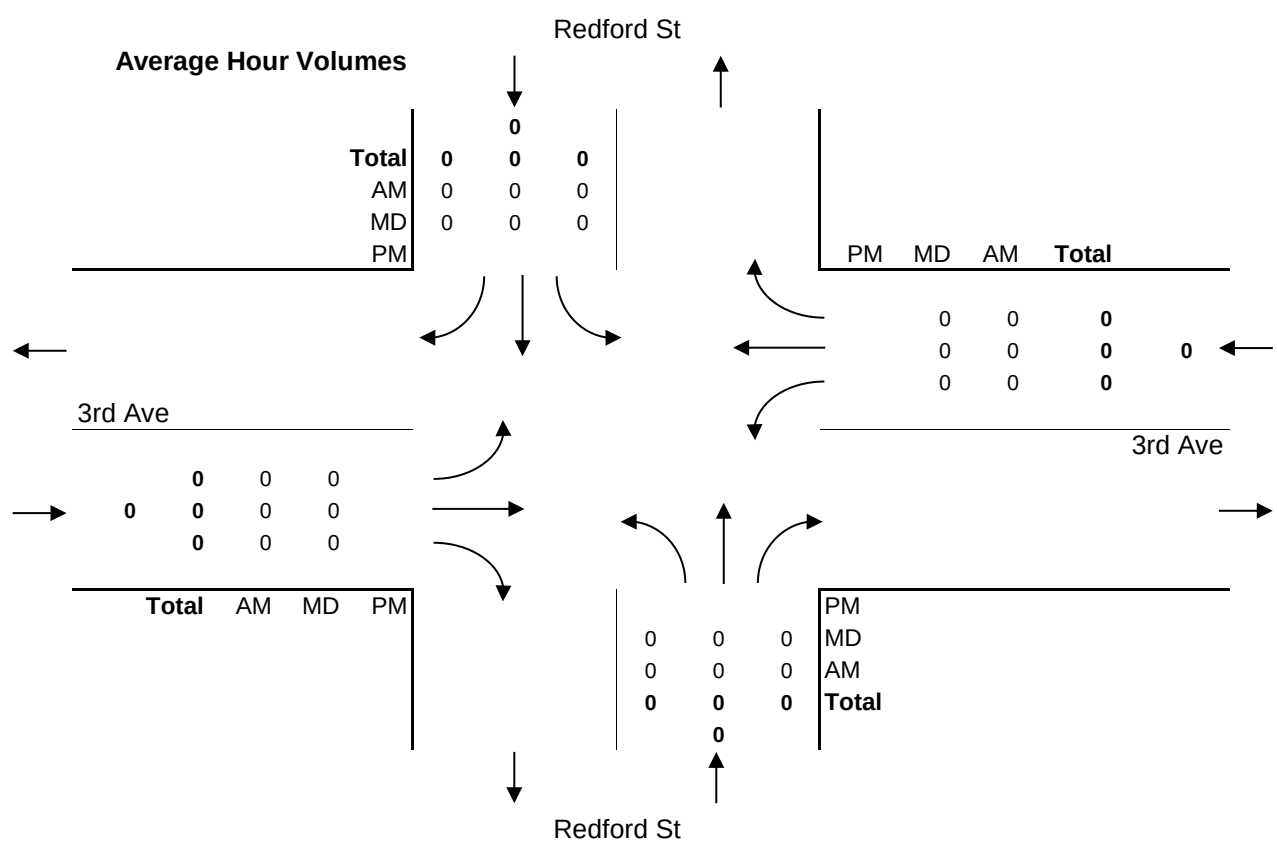

Vehicle Turning Movement Survey
With Classification

Major Route: 3rd Avenue
Minor Route: Redford Street
Municipality: Port Alberni
Filename: 1-3rd Ave @ Redford St-Sep 26, 2017.xlsx
Location #: 1

Date: September 26, 2017
Day-of-week: Tuesday

East/West Route: 3rd Avenue
Intersection Type: 4-leg
Signalized?: Yes
Weather: Clear and dry

Vehicle Classifications: Regular Vehicles
Buses
Articulated Trucks
Cube Trucks
Dump Trucks
Emergency Trucks
Garbage Trucks
Logging Trucks
RVs
Utility Trucks

This data is for Garbage Trucks

Shift	Start	End	Duration
AM	7:00	12:00	5.00
MD	12:00	15:00	3.00
PM			
Total	**7:00**		**8.00**

Notes: 24-hour clock used for reporting (15-minute increments)
North Approach - southbound vehicles approaching intersection from the north
15x4 - 15 min volume (from maximum 15 minute period of movement/approach in peak hour period [*]) x 4
Pedestrians - N indicates pedestrians crossing north approach (east/west)

Comments:

Survey Data
Garbage Trucks

3rd Avenue @ Redford Street
Tuesday, September 26, 2017

Time Period Begins	Redford St NORTH Approach				Redford St SOUTH Approach				3rd Ave WEST Approach				3rd Ave EAST Approach				Total Volume		Peak				
	Left	Thru	Right	Total	Left	Thru	Right	Total	Left	Thru	Right	Total	Left	Thru	Right	Total	15-min	Hour		N	S	W	E
7:00	0	0	0	**0**	0	0	0	**0**	0	0	0	**0**	0	0	0	**0**	**0**			0	0	0	0
7:15	0	0	0	**0**	0	0	0	**0**	0	0	0	**0**	1	0	0	**1**	**1**			0	0	0	0
7:30	0	0	0	**0**	0	0	0	**0**	0	0	0	**0**	1	0	0	**1**	**1**			0	0	0	0
7:45	0	0	0	**0**	0	0	0	**0**	0	0	0	**0**	0	0	0	**0**	**0**	2		0	0	0	0
8:00	0	0	0	**0**	0	0	0	**0**	0	0	0	**0**	0	0	0	**0**	**0**	2		0	0	0	0
8:15	0	0	0	**0**	0	0	0	**0**	0	0	0	**0**	0	0	0	**0**	**0**	1		0	0	0	0
8:30	0	0	0	**0**	0	1	0	**1**	0	0	0	**0**	0	0	0	**0**	**1**	1		0	0	0	0
8:45	0	0	0	**0**	0	0	0	**0**	0	0	0	**0**	0	0	0	**0**	**0**	1		0	0	0	0
9:00	0	0	0	**0**	0	0	0	**0**	0	0	0	**0**	0	0	0	**0**	**0**	1		0	0	0	0
9:15	0	0	0	**0**	0	0	0	**0**	0	0	0	**0**	0	0	0	**0**	**0**	1		0	0	0	0
9:30	0	0	0	**0**	0	0	0	**0**	0	0	0	**0**	0	0	0	**0**	**0**	0		0	0	0	0
9:45	0	0	0	**0**	0	0	0	**0**	0	0	0	**0**	0	0	0	**0**	**0**	0		0	0	0	0
10:00	0	0	0	**0**	0	0	0	**0**	0	0	0	**0**	0	0	1	**1**	**1**	1		0	0	0	0
10:15	0	0	0	**0**	0	0	0	**0**	0	0	0	**0**	0	0	0	**0**	**0**	1		0	0	0	0
10:30	0	0	0	**0**	0	0	0	**0**	0	0	0	**0**	0	0	0	**0**	**0**	1		0	0	0	0
10:45	0	0	0	**0**	0	0	0	**0**	0	0	0	**0**	0	0	0	**0**	**0**	1		0	0	0	0
11:00	0	0	0	**0**	0	0	0	**0**	0	0	0	**0**	0	0	0	**0**	**0**	0	*	0	0	0	0
11:15	0	0	0	**0**	0	0	0	**0**	0	0	0	**0**	0	0	0	**0**	**0**	0	*	0	0	0	0
11:30	0	0	0	**0**	0	0	0	**0**	0	0	0	**0**	0	0	0	**0**	**0**	0	*	0	0	0	0
11:45	0	0	0	**0**	0	1	0	**1**	0	0	0	**0**	0	0	0	**0**	**1**	1	+	0	0	0	0
Total	0	0	0	**0**	0	2	0	**2**	0	0	0	**0**	2	0	1	**3**	**5**			0	0	0	0
12:00	0	0	0	**0**	0	0	0	**0**	0	0	0	**0**	0	0	0	**0**	**0**			0	0	0	0
12:15	0	0	0	**0**	0	0	0	**0**	0	0	0	**0**	0	0	0	**0**	**0**			0	0	0	0
12:30	0	0	0	**0**	0	0	0	**0**	0	0	0	**0**	0	0	0	**0**	**0**			0	0	0	0
12:45	0	0	0	**0**	0	0	0	**0**	0	0	0	**0**	0	0	0	**0**	**0**	0		0	0	0	0
13:00	0	0	0	**0**	0	0	0	**0**	0	0	0	**0**	1	0	0	**1**	**1**	1		0	0	0	0
13:15	0	0	0	**0**	0	0	0	**0**	0	0	0	**0**	0	0	0	**0**	**0**	1		0	0	0	0
13:30	0	0	0	**0**	0	0	0	**0**	0	0	0	**0**	0	0	0	**0**	**0**	1		0	0	0	0
13:45	0	0	0	**0**	0	0	0	**0**	0	0	0	**0**	0	0	0	**0**	**0**	1		0	0	0	0
14:00	0	0	0	**0**	0	0	0	**0**	0	0	0	**0**	0	0	0	**0**	**0**	0	*	0	0	0	0
14:15	0	0	0	**0**	0	0	0	**0**	0	0	0	**0**	0	0	0	**0**	**0**	0	+	0	0	0	0
14:30	0	0	0	**0**	0	0	0	**0**	0	0	0	**0**	0	0	0	**0**	**0**	0	*	0	0	0	0
14:45	0	0	0	**0**	0	0	0	**0**	0	0	0	**0**	0	0	0	**0**	**0**	0	*	0	0	0	0
n/a																							
n/a																							
n/a																							
n/a																							
Total	0	0	0	**0**	0	0	0	**0**	0	0	0	**0**	1	0	0	**1**	**1**			0	0	0	0
n/a																							
n/a																							
n/a																							
n/a																							
n/a																							
n/a																							
n/a																							
n/a																							
n/a																							
n/a																							
n/a																							
n/a																							
n/a																							
n/a																							
n/a																							
n/a																							
n/a																							
n/a																							
Total																							

AM Peak Period
Garbage Trucks

3rd Avenue @ Redford Street
Tuesday, September 26, 2017

Time Period Begins	Redford St NORTH Approach				Redford St SOUTH Approach				3rd Ave WEST Approach				3rd Ave EAST Approach				Total Volume		Peak					Conflict	
	Left	Thru	Right	Total	Left	Thru	Right	Total	Left	Thru	Right	Total	Left	Thru	Right	Total	15-min	Hour		N	S	W	E	15 min	Hr
7:00	0	0	0	0	0	0	0	0	0	0	0	0	0	0	0	0	0			0	0	0	0	0	
7:15	0	0	0	0	0	0	0	0	0	0	0	0	1	0	0	1	1			0	0	0	0	1	
7:30	0	0	0	0	0	0	0	0	0	0	0	0	1	0	0	1	1			0	0	0	0	1	
7:45	0	0	0	0	0	0	0	0	0	0	0	0	0	0	0	0	0	2		0	0	0	0	0	2
8:00	0	0	0	0	0	0	0	0	0	0	0	0	0	0	0	0	0	2		0	0	0	0	0	2
8:15	0	0	0	0	0	0	0	0	0	0	0	0	0	0	0	0	0	1		0	0	0	0	0	1
8:30	0	0	0	0	0	1	0	1	0	0	0	0	0	0	0	0	1	1		0	0	0	0	1	1
8:45	0	0	0	0	0	0	0	0	0	0	0	0	0	0	0	0	0	1		0	0	0	0	0	1
9:00	0	0	0	0	0	0	0	0	0	0	0	0	0	0	0	0	0	1		0	0	0	0	0	1
9:15	0	0	0	0	0	0	0	0	0	0	0	0	0	0	0	0	0	1		0	0	0	0	0	1
9:30	0	0	0	0	0	0	0	0	0	0	0	0	0	0	0	0	0	0		0	0	0	0	0	0
9:45	0	0	0	0	0	0	0	0	0	0	0	0	0	0	0	0	0	0		0	0	0	0	0	0
10:00	0	0	0	0	0	0	0	0	0	0	0	0	0	0	1	1	1	1		0	0	0	0	1	1
10:15	0	0	0	0	0	0	0	0	0	0	0	0	0	0	0	0	0	1		0	0	0	0	0	1
10:30	0	0	0	0	0	0	0	0	0	0	0	0	0	0	0	0	0	1		0	0	0	0	0	1
10:45	0	0	0	0	0	0	0	0	0	0	0	0	0	0	0	0	0	1		0	0	0	0	0	1
11:00	0	0	0	0	0	0	0	0	0	0	0	0	0	0	0	0	0	0	*	0	0	0	0	0	0
11:15	0	0	0	0	0	0	0	0	0	0	0	0	0	0	0	0	0	0	*	0	0	0	0	0	0
11:30	0	0	0	0	0	0	0	0	0	0	0	0	0	0	0	0	0	0	*	0	0	0	0	0	0
11:45	0	0	0	0	0	1	0	1	0	0	0	0	0	0	0	0	1	1	+	0	0	0	0	1	1
Total	0	0	0	**0**	0	2	0	**2**	0	0	0	**0**	2	0	1	**3**	5			0	0	0	0		4
Avg Hr	0	0	0	**0**	0	0	0	**0**	0	0	0	**0**	0	0	0	**1**	1			0	0	0	0		

Peak hour of the intersection

Pk Hr	0	0	0	0	0	1	0	1	0	0	0	0	0	0	0	0	1	*		0	0	0	0		1
15x4	0	0	0	0	0	4	0	4	0	0	0	0	0	0	0	0	4	+		0	0	0	0		4
PHF	n/a	n/a	n/a	**n/a**	n/a	0.25	n/a	**0.25**	n/a	n/a	n/a	**n/a**	n/a	n/a	n/a	**n/a**	0.25			n/a	n/a	n/a	n/a		0.25

Peak hour of conflicting volumes for the intersection

Pk Hr	0	0	0	0	0	1	0	1	0	0	0	0	0	0	0	0	1	*		0	0	0	0		1
15x4	0	0	0	0	0	4	0	4	0	0	0	0	0	0	0	0	4	+		0	0	0	0		4
PHF	n/a	n/a	n/a	**n/a**	n/a	0.25	n/a	**0.25**	n/a	n/a	n/a	**n/a**	n/a	n/a	n/a	**n/a**	0.25			n/a	n/a	n/a	n/a		0.25

** Calculated peak hour occurs during the first or last hour of shift and therefore may be invalid. **

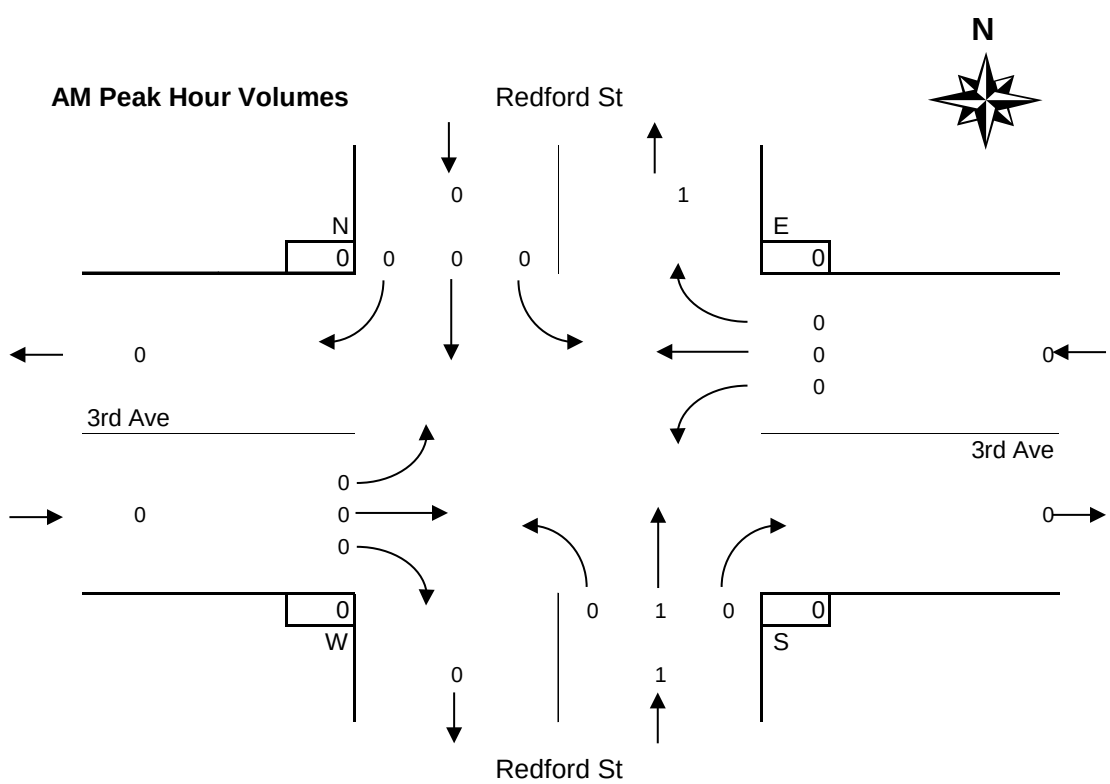

MD Peak Period
Garbage Trucks

3rd Avenue @ Redford Street
Tuesday, September 26, 2017

Time Period Begins	Redford St NORTH Approach				Redford St SOUTH Approach				3rd Ave WEST Approach				3rd Ave EAST Approach				Total Volume		Peak					Conflict	
	Left	Thru	Right	Total	Left	Thru	Right	Total	Left	Thru	Right	Total	Left	Thru	Right	Total	15-min	Hour		N	S	W	E	15 min	Hr
12:00	0	0	0	0	0	0	0	0	0	0	0	0	0	0	0	0	0			0	0	0	0	0	
12:15	0	0	0	0	0	0	0	0	0	0	0	0	0	0	0	0	0			0	0	0	0	0	
12:30	0	0	0	0	0	0	0	0	0	0	0	0	0	0	0	0	0			0	0	0	0	0	
12:45	0	0	0	0	0	0	0	0	0	0	0	0	0	0	0	0	0	0		0	0	0	0	0	0
13:00	0	0	0	0	0	0	0	0	0	0	0	0	1	0	0	1	1	1		0	0	0	0	1	1
13:15	0	0	0	0	0	0	0	0	0	0	0	0	0	0	0	0	0	1		0	0	0	0	0	1
13:30	0	0	0	0	0	0	0	0	0	0	0	0	0	0	0	0	0	1		0	0	0	0	0	1
13:45	0	0	0	0	0	0	0	0	0	0	0	0	0	0	0	0	0	1		0	0	0	0	0	1
14:00	0	0	0	0	0	0	0	0	0	0	0	0	0	0	0	0	0	0	*	0	0	0	0	0	0
14:15	0	0	0	0	0	0	0	0	0	0	0	0	0	0	0	0	0	0	+	0	0	0	0	0	0
14:30	0	0	0	0	0	0	0	0	0	0	0	0	0	0	0	0	0	0	*	0	0	0	0	0	0
14:45	0	0	0	0	0	0	0	0	0	0	0	0	0	0	0	0	0	0	*	0	0	0	0	0	0
n/a																									
n/a																									
n/a																									
n/a																									
Total	0	0	0	**0**	0	0	0	**0**	0	0	0	**0**	1	0	0	**1**	1			0	0	0	0		1
Avg Hr	0	0	0	**0**	0	0	0	**0**	0	0	0	**0**	0	0	0	**0**	0			0	0	0	0		

Peak hour of the intersection

Pk Hr	0	0	0	0	0	0	0	0	0	0	0	0	0	0	0	0	0	*		0	0	0	0		0
15x4	0	0	0	0	0	0	0	0	0	0	0	0	0	0	0	0	0	+		0	0	0	0		0
PHF	n/a	n/a	n/a	**n/a**	n/a	n/a	n/a	**n/a**	n/a	n/a	n/a	**n/a**	n/a	n/a	n/a	**n/a**	n/a			n/a	n/a	n/a	n/a		n/a

Peak hour of conflicting volumes for the intersection

Pk Hr	0	0	0	0	0	0	0	0	0	0	0	0	0	0	0	0	0	*		0	0	0	0		0
15x4	0	0	0	0	0	0	0	0	0	0	0	0	0	0	0	0	0	+		0	0	0	0		0
PHF	n/a	n/a	n/a	**n/a**	n/a	n/a	n/a	**n/a**	n/a	n/a	n/a	**n/a**	n/a	n/a	n/a	**n/a**	n/a			n/a	n/a	n/a	n/a		n/a

** Calculated peak hour occurs during the first or last hour of shift and therefore may be invalid. **

MD Peak Hour Volumes

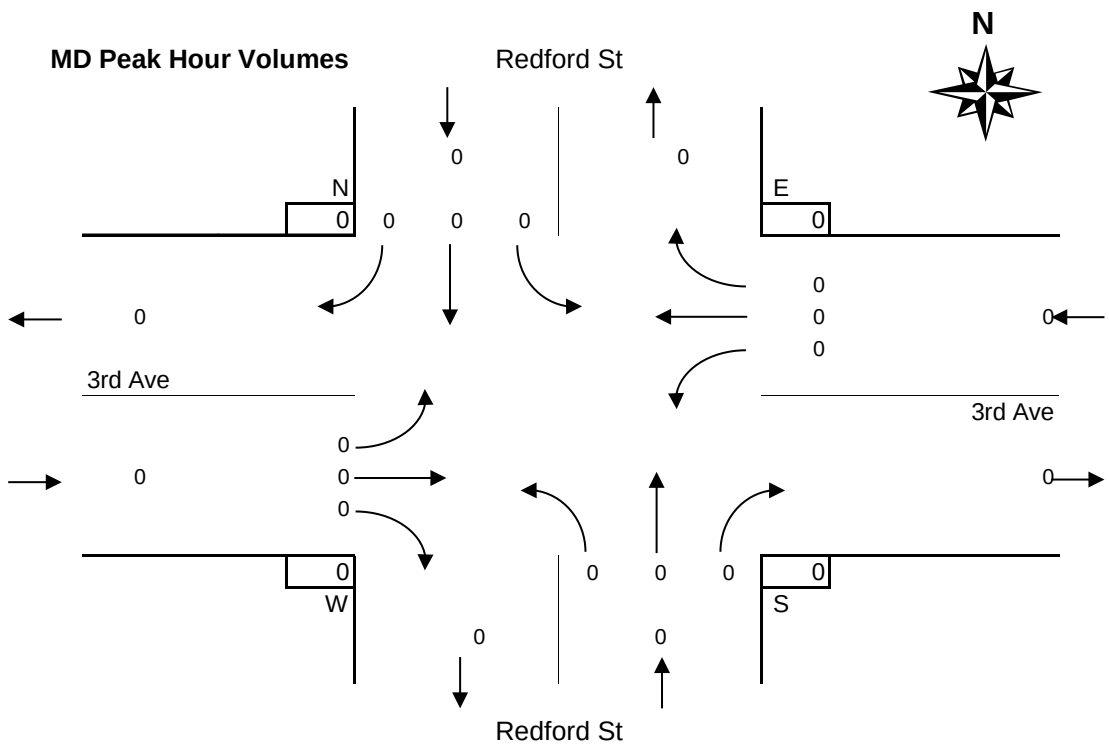

PM Peak Period
Garbage Trucks

3rd Avenue @ Redford Street
Tuesday, September 26, 2017

Time Period Begins	Redford St NORTH Approach				Redford St SOUTH Approach				3rd Ave WEST Approach				3rd Ave EAST Approach				Total Volume		Peak					Conflict	
	Left	Thru	Right	Total	Left	Thru	Right	Total	Left	Thru	Right	Total	Left	Thru	Right	Total	15-min	Hour		N	S	W	E	15 min	Hr
n/a																									
n/a																									
n/a																									
n/a																									
n/a																									
n/a																									
n/a																									
n/a																									
n/a																									
n/a																									
n/a																									
n/a																									
n/a																									
n/a																									
n/a																									
n/a																									
n/a																									
n/a																									
n/a																									
Total																									0
Avg Hr																									

Peak hour of the intersection

Pk Hr																		*							0
15x4																		+							0
PHF																									n/a

Peak hour of conflicting volumes for the intersection

Pk Hr																		*							0
15x4																		+							0
PHF																									n/a

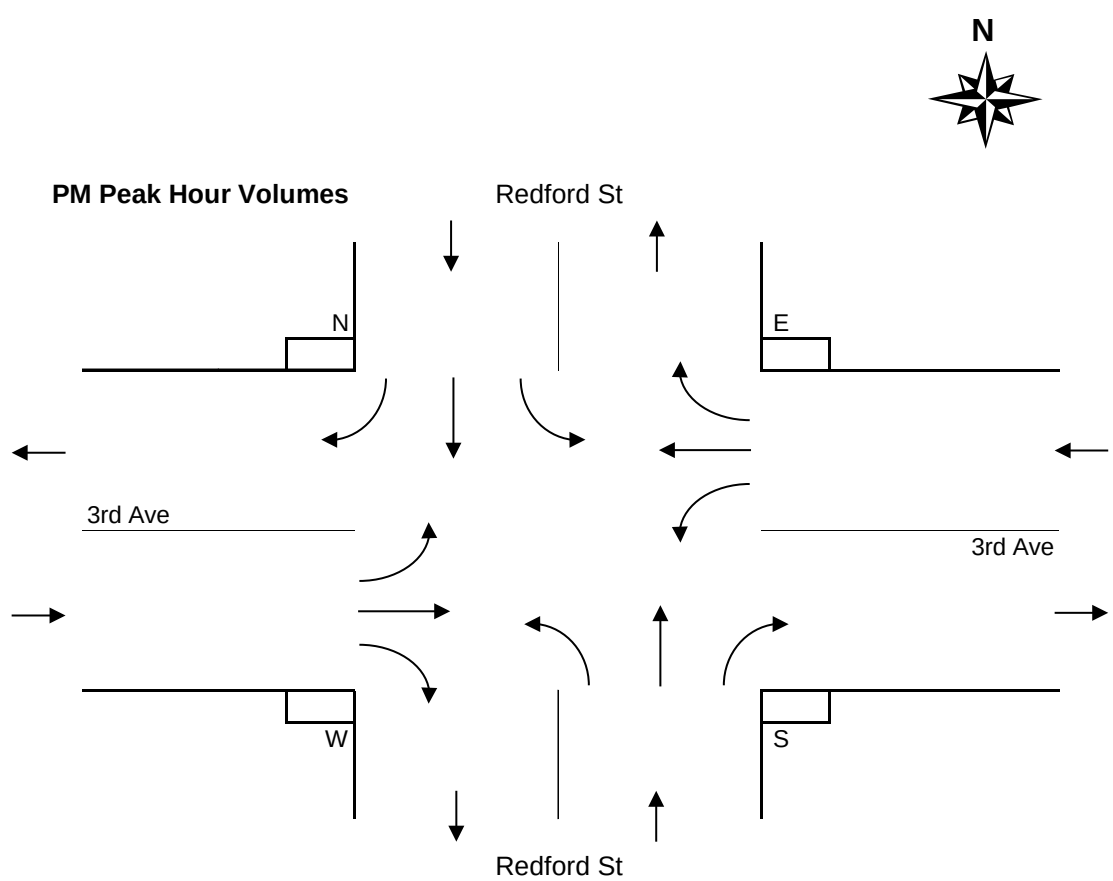

Period Hourly Averages
Garbage Trucks

3rd Avenue @ Redford Street
Tuesday, September 26, 2017

Entire Survey Period

8 Hours

	Redford St				Redford St				3rd Ave				3rd Ave							
	NORTH Approach				SOUTH Approach				WEST Approach				EAST Approach				Total			
	Left	Thru	Right	Total	Left	Thru	Right	Total	Left	Thru	Right	Total	Left	Thru	Right	Total	Volume	N	S	W	E
Total	0	0	0	**0**	0	2	0	**2**	0	0	0	**0**	3	0	1	**4**	6	0	0	0	0
Avg Hr	0	0	0	**0**	0	0	0	**0**	0	0	0	**0**	0	0	0	**1**	1	0	0	0	0

AM Peak Period

5 Hours

	Redford St				Redford St				3rd Ave				3rd Ave							
	NORTH Approach				SOUTH Approach				WEST Approach				EAST Approach				Total			
Totals	Left	Thru	Right	Total	Left	Thru	Right	Total	Left	Thru	Right	Total	Left	Thru	Right	Total	Volume	N	S	W	E
Period	0	0	0	**0**	0	2	0	**2**	0	0	0	**0**	2	0	1	**3**	5	0	0	0	0
Avg Hr	0	0	0	**0**	0	0	0	**0**	0	0	0	**0**	0	0	0	**1**	1	0	0	0	0

MD Peak Period

3 Hours

	Redford St				Redford St				3rd Ave				3rd Ave							
	NORTH Approach				SOUTH Approach				WEST Approach				EAST Approach				Total			
Totals	Left	Thru	Right	Total	Left	Thru	Right	Total	Left	Thru	Right	Total	Left	Thru	Right	Total	Volume	N	S	W	E
Total	0	0	0	**0**	0	0	0	**0**	0	0	0	**0**	1	0	0	**1**	1	0	0	0	0
Avg Hr	0	0	0	**0**	0	0	0	**0**	0	0	0	**0**	0	0	0	**0**	0	0	0	0	0

PM Peak Period

Hours

	Redford St				Redford St				3rd Ave				3rd Ave							
	NORTH Approach				SOUTH Approach				WEST Approach				EAST Approach				Total			
Totals	Left	Thru	Right	Total	Left	Thru	Right	Total	Left	Thru	Right	Total	Left	Thru	Right	Total	Volume	N	S	W	E
Total																				
Avg Hr																				

Average Hour Volumes

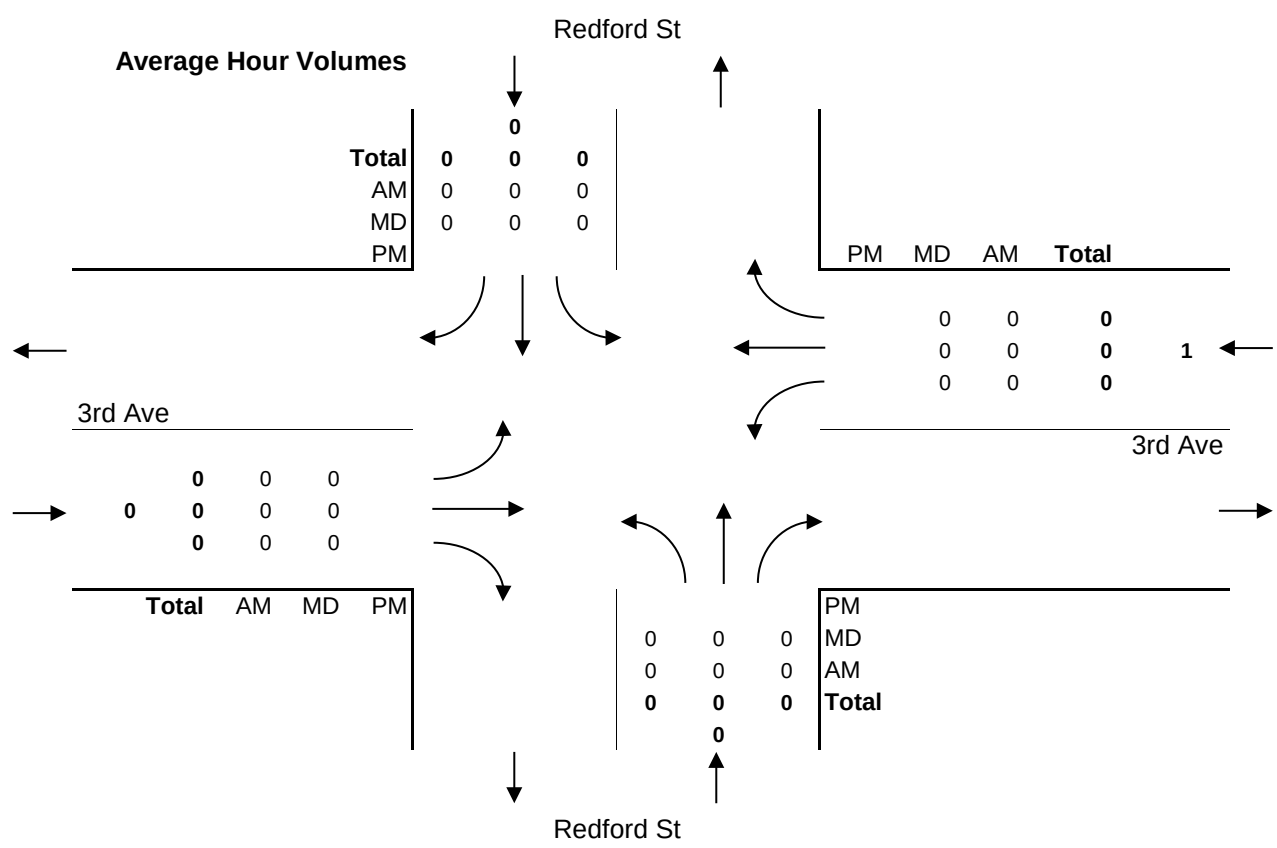

Vehicle Turning Movement Survey
With Classification

Major Route: 3rd Avenue
Minor Route: Redford Street
Municipality: Port Alberni
Filename: 1-3rd Ave @ Redford St-Sep 26, 2017.xlsx
Location #: 1

Date: September 26, 2017
Day-of-week: Tuesday

East/West Route: 3rd Avenue
Intersection Type: 4-leg
Signalized?: Yes
Weather: Clear and dry

Vehicle Classifications: Regular Vehicles
Buses
Articulated Trucks
Cube Trucks
Dump Trucks
Emergency Trucks
Garbage Trucks
Logging Trucks
RVs
Utility Trucks

This data is for Logging Trucks

Shift	Start	End	Duration
AM	7:00	12:00	5.00
MD	12:00	15:00	3.00
PM			
Total	**7:00**		**8.00**

Notes: 24-hour clock used for reporting (15-minute increments)
North Approach - southbound vehicles approaching intersection from the north
15x4 - 15 min volume (from maximum 15 minute period of movement/approach in peak hour period [*]) x 4
Pedestrians - N indicates pedestrians crossing north approach (east/west)

Comments:

Survey Data
Logging Trucks

3rd Avenue @ Redford Street
Tuesday, September 26, 2017

Time Period Begins	Redford St NORTH Approach				Redford St SOUTH Approach				3rd Ave WEST Approach				3rd Ave EAST Approach				Total Volume		Peak				
	Left	Thru	Right	Total	Left	Thru	Right	Total	Left	Thru	Right	Total	Left	Thru	Right	Total	15-min	Hour		N	S	W	E
7:00	0	0	0	**0**	0	1	0	**1**	0	0	0	**0**	0	0	0	**0**	**1**			0	0	0	0
7:15	0	2	0	**2**	0	0	0	**0**	0	0	0	**0**	0	0	0	**0**	**2**			0	0	0	0
7:30	0	0	0	**0**	0	2	0	**2**	0	0	0	**0**	0	0	0	**0**	**2**			0	0	0	0
7:45	0	1	0	**1**	0	1	0	**1**	0	0	0	**0**	0	0	0	**0**	**2**	7		0	0	0	0
8:00	0	1	0	**1**	0	1	0	**1**	0	0	0	**0**	0	0	0	**0**	**2**	8		0	0	0	0
8:15	0	0	0	**0**	0	2	0	**2**	0	0	0	**0**	0	0	0	**0**	**2**	8		0	0	0	0
8:30	0	1	0	**1**	0	1	0	**1**	0	0	0	**0**	0	0	0	**0**	**2**	8		0	0	0	0
8:45	0	1	0	**1**	0	0	0	**0**	0	0	0	**0**	0	0	0	**0**	**1**	7		0	0	0	0
9:00	0	3	0	**3**	0	2	0	**2**	0	0	0	**0**	0	0	0	**0**	**5**	10		0	0	0	0
9:15	0	1	0	**1**	0	0	0	**0**	0	0	0	**0**	0	0	0	**0**	**1**	9		0	0	0	0
9:30	0	2	0	**2**	0	1	0	**1**	0	0	0	**0**	0	0	0	**0**	**3**	10		0	0	0	0
9:45	0	3	0	**3**	0	0	0	**0**	0	0	0	**0**	0	0	0	**0**	**3**	12		0	0	0	0
10:00	0	0	0	**0**	0	0	0	**0**	0	0	0	**0**	0	0	0	**0**	**0**	7		0	0	0	0
10:15	0	1	0	**1**	0	2	0	**2**	0	0	0	**0**	0	0	0	**0**	**3**	9		0	0	0	0
10:30	0	0	0	**0**	0	2	0	**2**	0	0	0	**0**	0	0	0	**0**	**2**	8		0	0	0	0
10:45	0	2	0	**2**	0	1	0	**1**	0	0	0	**0**	0	0	0	**0**	**3**	8		0	0	0	0
11:00	0	0	0	**0**	0	0	1	**1**	0	0	0	**0**	0	0	0	**0**	**1**	9	*	0	0	0	0
11:15	0	3	0	**3**	0	3	0	**3**	0	0	0	**0**	0	0	0	**0**	**6**	12	*	0	0	0	0
11:30	0	0	0	**0**	0	0	0	**0**	0	0	0	**0**	0	0	0	**0**	**0**	10	*	0	0	0	0
11:45	0	1	0	**1**	0	1	0	**1**	0	0	0	**0**	0	0	0	**0**	**2**	9	+	0	0	0	0
Total	0	22	0	**22**	0	20	1	**21**	0	0	0	**0**	0	0	0	**0**	**43**			0	0	0	0
12:00	0	1	0	**1**	0	0	0	**0**	0	0	0	**0**	0	0	0	**0**	**1**			0	0	0	0
12:15	0	0	0	**0**	0	1	0	**1**	0	0	0	**0**	0	0	0	**0**	**1**			0	0	0	0
12:30	0	0	0	**0**	0	1	0	**1**	0	0	0	**0**	0	0	0	**0**	**1**			0	0	0	0
12:45	0	1	0	**1**	0	1	0	**1**	0	0	0	**0**	0	0	0	**0**	**2**	5		0	0	0	0
13:00	0	0	0	**0**	0	0	0	**0**	0	0	0	**0**	0	0	0	**0**	**0**	4		0	0	0	0
13:15	0	3	0	**3**	0	0	0	**0**	0	0	0	**0**	0	0	0	**0**	**3**	6		0	0	0	0
13:30	0	1	0	**1**	0	0	0	**0**	0	0	0	**0**	0	0	0	**0**	**1**	6		0	0	0	0
13:45	0	1	0	**1**	0	1	1	**2**	0	0	0	**0**	0	0	0	**0**	**3**	7		0	0	0	0
14:00	0	0	0	**0**	0	0	0	**0**	0	0	0	**0**	0	0	0	**0**	**0**	7	*	0	0	0	0
14:15	0	0	0	**0**	0	1	0	**1**	0	0	0	**0**	0	0	0	**0**	**1**	5	+	0	0	0	0
14:30	0	4	0	**4**	0	1	1	**2**	0	0	0	**0**	0	0	0	**0**	**6**	10	*	0	0	0	0
14:45	0	0	0	**0**	0	0	0	**0**	0	0	0	**0**	0	0	0	**0**	**0**	7	*	0	0	0	0
n/a																							
n/a																							
n/a																							
n/a																							
Total	0	11	0	**11**	0	6	2	**8**	0	0	0	**0**	0	0	0	**0**	**19**			0	0	0	0
n/a																							
n/a																							
n/a																							
n/a																							
n/a																							
n/a																							
n/a																							
n/a																							
n/a																							
n/a																							
n/a																							
n/a																							
n/a																							
n/a																							
n/a																							
n/a																							
n/a																							
n/a																							
Total																							

AM Peak Period
Logging Trucks

3rd Avenue @ Redford Street
Tuesday, September 26, 2017

Time Period Begins	Redford St NORTH Approach				Redford St SOUTH Approach				3rd Ave WEST Approach				3rd Ave EAST Approach				Total Volume		Peak					Conflict	
	Left	Thru	Right	Total	Left	Thru	Right	Total	Left	Thru	Right	Total	Left	Thru	Right	Total	15-min	Hour		N	S	W	E	15 min	Hr
7:00	0	0	0	0	0	1	0	1	0	0	0	0	0	0	0	0	1			0	0	0	0	1	
7:15	0	2	0	2	0	0	0	0	0	0	0	0	0	0	0	0	2			0	0	0	0	2	
7:30	0	0	0	0	0	2	0	2	0	0	0	0	0	0	0	0	2			0	0	0	0	2	
7:45	0	1	0	1	0	1	0	1	0	0	0	0	0	0	0	0	2	7		0	0	0	0	1	6
8:00	0	1	0	1	0	1	0	1	0	0	0	0	0	0	0	0	2	8		0	0	0	0	1	6
8:15	0	0	0	0	0	2	0	2	0	0	0	0	0	0	0	0	2	8		0	0	0	0	2	6
8:30	0	1	0	1	0	1	0	1	0	0	0	0	0	0	0	0	2	8		0	0	0	0	1	5
8:45	0	1	0	1	0	0	0	0	0	0	0	0	0	0	0	0	1	7		0	0	0	0	1	5
9:00	0	3	0	3	0	2	0	2	0	0	0	0	0	0	0	0	5	10		0	0	0	0	3	7
9:15	0	1	0	1	0	0	0	0	0	0	0	0	0	0	0	0	1	9		0	0	0	0	1	6
9:30	0	2	0	2	0	1	0	1	0	0	0	0	0	0	0	0	3	10		0	0	0	0	2	7
9:45	0	3	0	3	0	0	0	0	0	0	0	0	0	0	0	0	3	12		0	0	0	0	3	9
10:00	0	0	0	0	0	0	0	0	0	0	0	0	0	0	0	0	0	7		0	0	0	0	0	6
10:15	0	1	0	1	0	2	0	2	0	0	0	0	0	0	0	0	3	9		0	0	0	0	2	7
10:30	0	0	0	0	0	2	0	2	0	0	0	0	0	0	0	0	2	8		0	0	0	0	2	7
10:45	0	2	0	2	0	1	0	1	0	0	0	0	0	0	0	0	3	8		0	0	0	0	2	6
11:00	0	0	0	0	0	0	1	1	0	0	0	0	0	0	0	0	1	9	*	0	0	0	0	1	7
11:15	0	3	0	3	0	3	0	3	0	0	0	0	0	0	0	0	6	12	*	0	0	0	0	3	8
11:30	0	0	0	0	0	0	0	0	0	0	0	0	0	0	0	0	0	10	*	0	0	0	0	0	6
11:45	0	1	0	1	0	1	0	1	0	0	0	0	0	0	0	0	2	9	+	0	0	0	0	1	5
Total	0	22	0	**22**	0	20	1	**21**	0	0	0	**0**	0	0	0	**0**	43			0	0	0	0		22
Avg Hr	0	4	0	**4**	0	4	0	**4**	0	0	0	**0**	0	0	0	**0**	9			0	0	0	0		

Peak hour of the intersection

Pk Hr	0	4	0	4	0	4	1	5	0	0	0	0	0	0	0	0	9	*		0	0	0	0		5
15x4	0	12	0	12	0	12	4	12	0	0	0	0	0	0	0	0	24	+		0	0	0	0		16
PHF	n/a	0.33	n/a	**0.33**	n/a	0.33	0.25	**0.42**	n/a	n/a	n/a	**n/a**	n/a	n/a	n/a	**n/a**	0.38			n/a	n/a	n/a	n/a		0.31

Peak hour of conflicting volumes for the intersection

Pk Hr	0	4	0	4	0	4	1	5	0	0	0	0	0	0	0	0	9	*		0	0	0	0		5
15x4	0	12	0	12	0	12	4	12	0	0	0	0	0	0	0	0	24	+		0	0	0	0		16
PHF	n/a	0.33	n/a	**0.33**	n/a	0.33	0.25	**0.42**	n/a	n/a	n/a	**n/a**	n/a	n/a	n/a	**n/a**	0.38			n/a	n/a	n/a	n/a		0.31

** Calculated peak hour occurs during the first or last hour of shift and therefore may be invalid. **

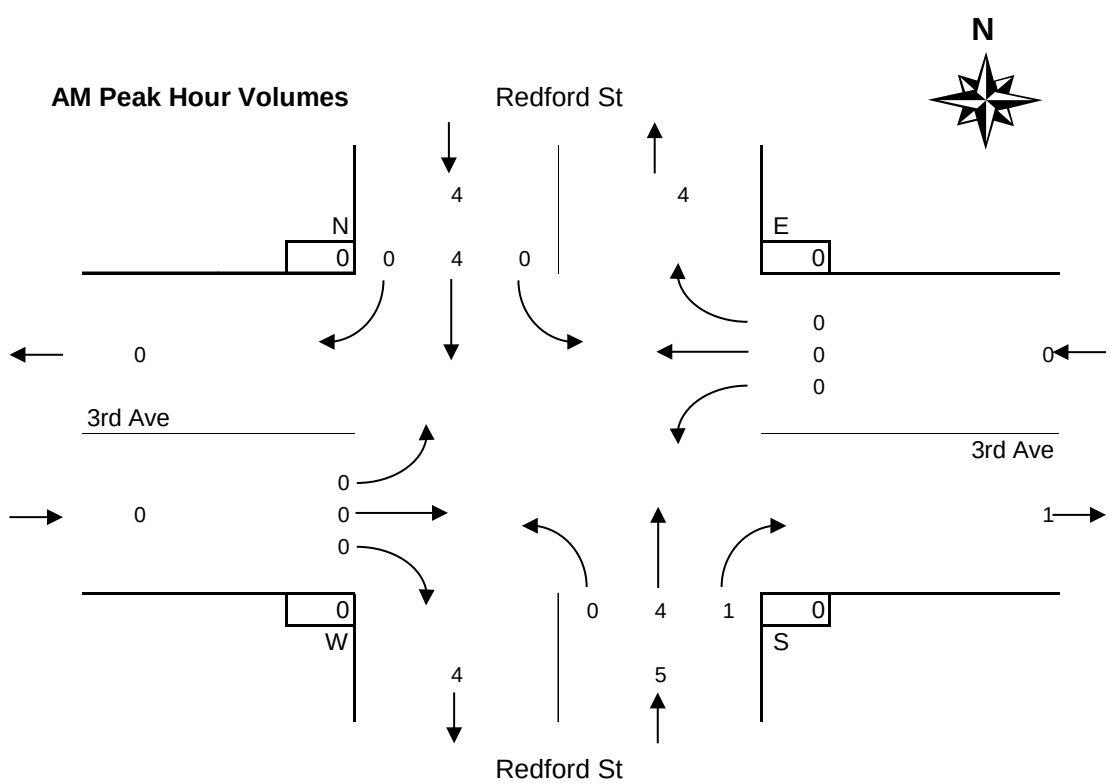

MD Peak Period
Logging Trucks

3rd Avenue @ Redford Street
Tuesday, September 26, 2017

Time Period Begins	Redford St NORTH Approach				Redford St SOUTH Approach				3rd Ave WEST Approach				3rd Ave EAST Approach				Total Volume		Peak					Conflict	
	Left	Thru	Right	Total	Left	Thru	Right	Total	Left	Thru	Right	Total	Left	Thru	Right	Total	15-min	Hour		N	S	W	E	15 min	Hr
12:00	0	1	0	1	0	0	0	0	0	0	0	0	0	0	0	0	1			0	0	0	0	1	
12:15	0	0	0	0	0	1	0	1	0	0	0	0	0	0	0	0	1			0	0	0	0	1	
12:30	0	0	0	0	0	1	0	1	0	0	0	0	0	0	0	0	1			0	0	0	0	1	
12:45	0	1	0	1	0	1	0	1	0	0	0	0	0	0	0	0	2	5		0	0	0	0	1	4
13:00	0	0	0	0	0	0	0	0	0	0	0	0	0	0	0	0	0	4		0	0	0	0	0	3
13:15	0	3	0	3	0	0	0	0	0	0	0	0	0	0	0	0	3	6		0	0	0	0	3	5
13:30	0	1	0	1	0	0	0	0	0	0	0	0	0	0	0	0	1	6		0	0	0	0	1	5
13:45	0	1	0	1	0	1	1	2	0	0	0	0	0	0	0	0	3	7		0	0	0	0	2	6
14:00	0	0	0	0	0	0	0	0	0	0	0	0	0	0	0	0	0	7	*	0	0	0	0	0	6
14:15	0	0	0	0	0	1	0	1	0	0	0	0	0	0	0	0	1	5	+	0	0	0	0	1	4
14:30	0	4	0	4	0	1	1	2	0	0	0	0	0	0	0	0	6	10	*	0	0	0	0	4	7
14:45	0	0	0	0	0	0	0	0	0	0	0	0	0	0	0	0	0	7	*	0	0	0	0	0	5
n/a																									
n/a																									
n/a																									
n/a																									
Total	0	11	0	**11**	0	6	2	**8**	0	0	0	**0**	0	0	0	**0**	19			0	0	0	0		11
Avg Hr	0	4	0	**4**	0	2	1	**3**	0	0	0	**0**	0	0	0	**0**	6			0	0	0	0		

Peak hour of the intersection

Pk Hr	0	4	0	4	0	2	1	3	0	0	0	0	0	0	0	0	7	*		0	0	0	0		4
15x4	0	16	0	16	0	4	4	8	0	0	0	0	0	0	0	0	24	+		0	0	0	0		16
PHF	n/a	0.25	n/a	**0.25**	n/a	0.50	0.25	**0.38**	n/a	n/a	n/a	**n/a**	n/a	n/a	n/a	**n/a**	0.29			n/a	n/a	n/a	n/a		0.25

Peak hour of conflicting volumes for the intersection

Pk Hr	0	4	0	4	0	2	1	3	0	0	0	0	0	0	0	0	7	*		0	0	0	0		4
15x4	0	16	0	16	0	4	4	8	0	0	0	0	0	0	0	0	24	+		0	0	0	0		16
PHF	n/a	0.25	n/a	**0.25**	n/a	0.50	0.25	**0.38**	n/a	n/a	n/a	**n/a**	n/a	n/a	n/a	**n/a**	0.29			n/a	n/a	n/a	n/a		0.25

** Calculated peak hour occurs during the first or last hour of shift and therefore may be invalid. **

MD Peak Hour Volumes

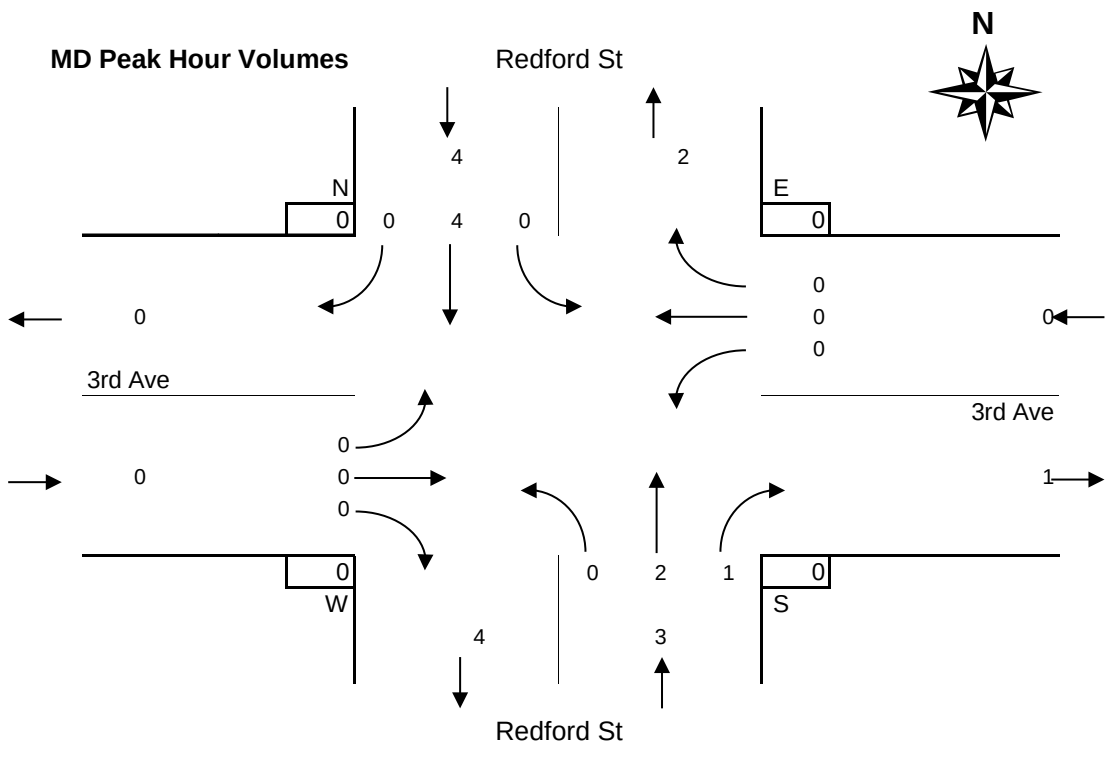

PM Peak Period
Logging Trucks

3rd Avenue @ Redford Street
Tuesday, September 26, 2017

Time Period Begins	Redford St NORTH Approach				Redford St SOUTH Approach				3rd Ave WEST Approach				3rd Ave EAST Approach				Total Volume		Peak					Conflict	
	Left	Thru	Right	Total	Left	Thru	Right	Total	Left	Thru	Right	Total	Left	Thru	Right	Total	15-min	Hour		N	S	W	E	15 min	Hr
n/a																									
n/a																									
n/a																									
n/a																									
n/a																									
n/a																									
n/a																									
n/a																									
n/a																									
n/a																									
n/a																									
n/a																									
n/a																									
n/a																									
n/a																									
n/a																									
n/a																									
n/a																									
n/a																									
Total																									0
Avg Hr																									

Peak hour of the intersection

Pk Hr																		*							0
15x4																		+							0
PHF																									n/a

Peak hour of conflicting volumes for the intersection

Pk Hr																		*							0
15x4																		+							0
PHF																									n/a

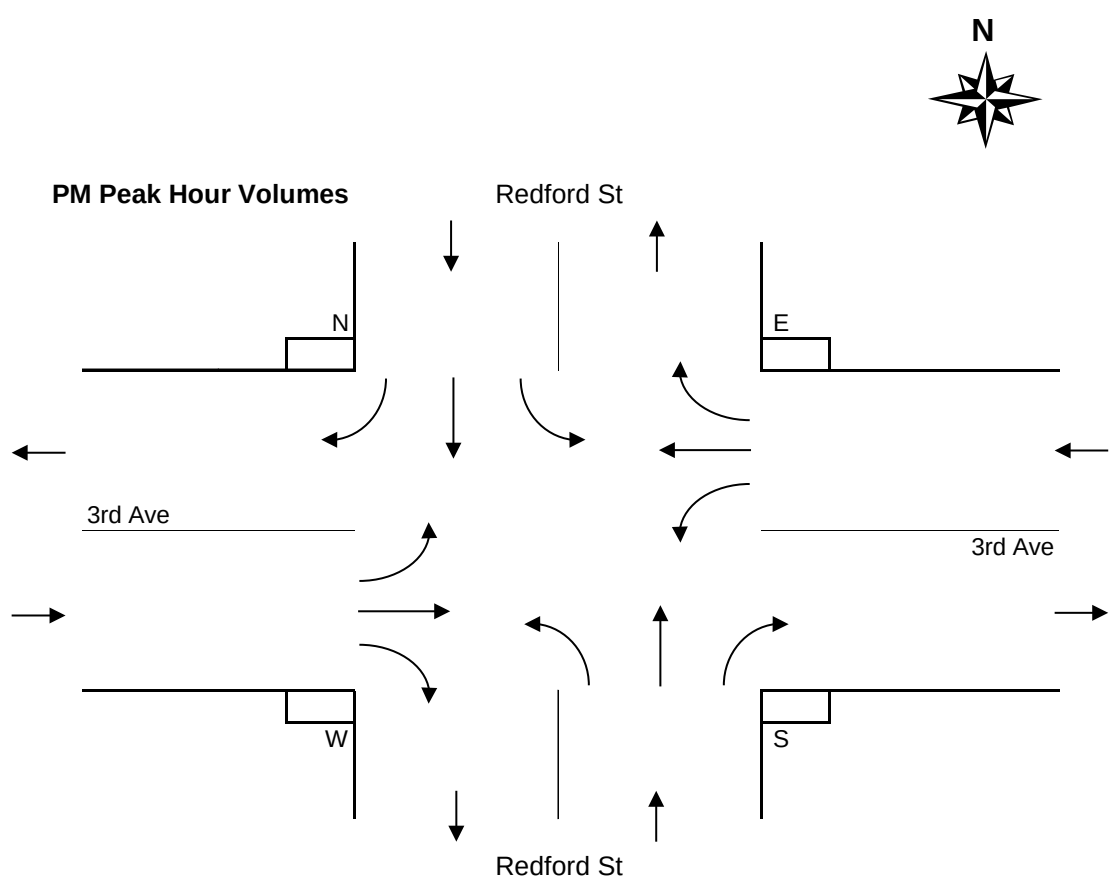

Period Hourly Averages
Logging Trucks

3rd Avenue @ Redford Street
Tuesday, September 26, 2017

Entire Survey Period

8 Hours

	Redford St				Redford St				3rd Ave				3rd Ave							
	NORTH Approach				SOUTH Approach				WEST Approach				EAST Approach				Total			
	Left	Thru	Right	Total	Left	Thru	Right	Total	Left	Thru	Right	Total	Left	Thru	Right	Total	Volume	N	S	W	E
Total	0	33	0	**33**	0	26	3	**29**	0	0	0	**0**	0	0	0	**0**	62	0	0	0	0
Avg Hr	0	4	0	**4**	0	3	0	**4**	0	0	0	**0**	0	0	0	**0**	8	0	0	0	0

AM Peak Period

5 Hours

	Redford St				Redford St				3rd Ave				3rd Ave							
	NORTH Approach				SOUTH Approach				WEST Approach				EAST Approach				Total			
Totals	Left	Thru	Right	Total	Left	Thru	Right	Total	Left	Thru	Right	Total	Left	Thru	Right	Total	Volume	N	S	W	E
Period	0	22	0	**22**	0	20	1	**21**	0	0	0	**0**	0	0	0	**0**	43	0	0	0	0
Avg Hr	0	4	0	**4**	0	4	0	**4**	0	0	0	**0**	0	0	0	**0**	9	0	0	0	0

MD Peak Period

3 Hours

	Redford St				Redford St				3rd Ave				3rd Ave							
	NORTH Approach				SOUTH Approach				WEST Approach				EAST Approach				Total			
Totals	Left	Thru	Right	Total	Left	Thru	Right	Total	Left	Thru	Right	Total	Left	Thru	Right	Total	Volume	N	S	W	E
Total	0	11	0	**11**	0	6	2	**8**	0	0	0	**0**	0	0	0	**0**	19	0	0	0	0
Avg Hr	0	4	0	**4**	0	2	1	**3**	0	0	0	**0**	0	0	0	**0**	6	0	0	0	0

PM Peak Period

Hours

	Redford St				Redford St				3rd Ave				3rd Ave							
	NORTH Approach				SOUTH Approach				WEST Approach				EAST Approach				Total			
Totals	Left	Thru	Right	Total	Left	Thru	Right	Total	Left	Thru	Right	Total	Left	Thru	Right	Total	Volume	N	S	W	E
Total																				
Avg Hr																				

Average Hour Volumes

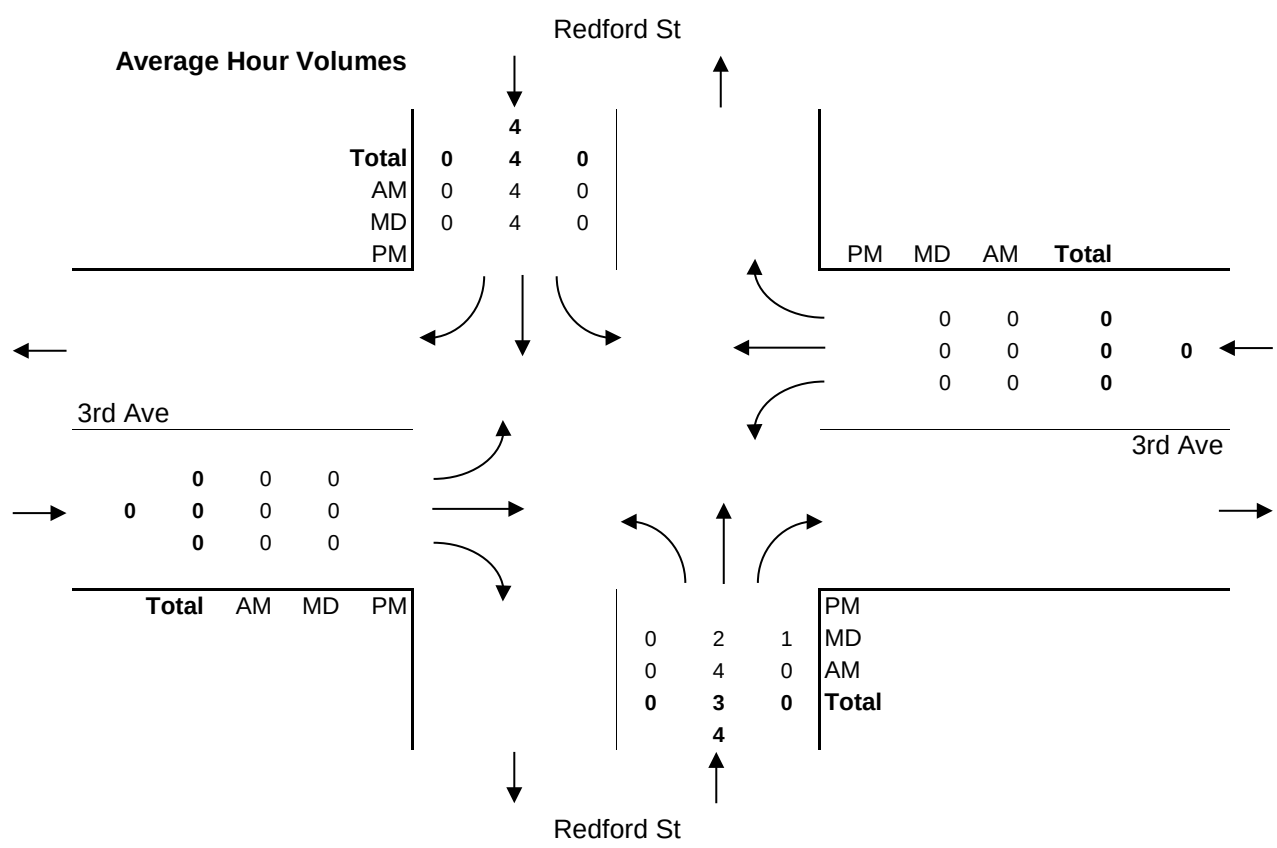

Vehicle Turning Movement Survey
With Classification

Major Route: 3rd Avenue
Minor Route: Redford Street
Municipality: Port Alberni
Filename: 1-3rd Ave @ Redford St-Sep 26, 2017.xlsx
Location #: 1

Date: September 26, 2017
Day-of-week: Tuesday

East/West Route: 3rd Avenue
Intersection Type: 4-leg
Signalized?: Yes
Weather: Clear and dry

Vehicle Classifications: Regular Vehicles
Buses
Articulated Trucks
Cube Trucks
Dump Trucks
Emergency Trucks
Garbage Trucks
Logging Trucks
RVs
Utility Trucks

This data is for RVs

Shift	Start	End	Duration
AM	7:00	12:00	5.00
MD	12:00	15:00	3.00
PM			
Total	**7:00**		**8.00**

Notes: 24-hour clock used for reporting (15-minute increments)
North Approach - southbound vehicles approaching intersection from the north
15x4 - 15 min volume (from maximum 15 minute period of movement/approach in peak hour period [*]) x 4
Pedestrians - N indicates pedestrians crossing north approach (east/west)

Comments:

Survey Data
RVs

3rd Avenue @ Redford Street
Tuesday, September 26, 2017

Time Period Begins	Redford St NORTH Approach				Redford St SOUTH Approach				3rd Ave WEST Approach				3rd Ave EAST Approach				Total Volume		Peak				
	Left	Thru	Right	Total	Left	Thru	Right	Total	Left	Thru	Right	Total	Left	Thru	Right	Total	15-min	Hour		N	S	W	E
7:00	0	0	0	**0**	0	0	0	**0**	0	0	0	**0**	0	0	0	**0**	**0**			0	0	0	0
7:15	0	0	0	**0**	0	0	0	**0**	0	0	0	**0**	0	0	0	**0**	**0**			0	0	0	0
7:30	0	0	0	**0**	0	0	0	**0**	0	0	0	**0**	0	0	0	**0**	**0**			0	0	0	0
7:45	0	0	0	**0**	0	0	0	**0**	0	0	0	**0**	0	0	0	**0**	**0**	0		0	0	0	0
8:00	0	0	0	**0**	0	0	0	**0**	0	0	0	**0**	0	0	0	**0**	**0**	0		0	0	0	0
8:15	0	0	0	**0**	0	1	0	**1**	0	0	0	**0**	0	0	0	**0**	**1**	1		0	0	0	0
8:30	0	0	0	**0**	0	0	0	**0**	0	0	0	**0**	0	0	0	**0**	**0**	1		0	0	0	0
8:45	0	1	0	**1**	0	0	0	**0**	0	0	0	**0**	0	0	0	**0**	**1**	2		0	0	0	0
9:00	0	0	0	**0**	0	0	0	**0**	0	0	0	**0**	0	0	0	**0**	**0**	2		0	0	0	0
9:15	0	0	0	**0**	0	0	0	**0**	0	0	0	**0**	0	0	0	**0**	**0**	1		0	0	0	0
9:30	0	0	0	**0**	0	0	0	**0**	0	0	0	**0**	0	0	0	**0**	**0**	1		0	0	0	0
9:45	0	0	0	**0**	0	0	0	**0**	0	0	0	**0**	0	0	0	**0**	**0**	0		0	0	0	0
10:00	0	1	0	**1**	0	0	0	**0**	0	0	0	**0**	0	0	0	**0**	**1**	1		0	0	0	0
10:15	0	0	0	**0**	0	0	0	**0**	0	0	0	**0**	0	0	0	**0**	**0**	1		0	0	0	0
10:30	1	1	0	**2**	0	0	0	**0**	0	0	0	**0**	0	0	1	**1**	**3**	4		0	0	0	0
10:45	0	0	0	**0**	0	0	0	**0**	0	0	0	**0**	0	0	0	**0**	**0**	4		0	0	0	0
11:00	0	0	0	**0**	0	0	0	**0**	0	0	0	**0**	0	0	0	**0**	**0**	3	*	0	0	0	0
11:15	0	1	0	**1**	0	0	0	**0**	0	0	0	**0**	0	0	0	**0**	**1**	4	*	0	0	0	0
11:30	0	2	0	**2**	0	2	0	**2**	0	0	0	**0**	0	0	1	**1**	**5**	6	*	0	0	0	0
11:45	0	1	0	**1**	0	0	0	**0**	0	0	0	**0**	0	0	0	**0**	**1**	7	+	0	0	0	0
Total	1	7	0	**8**	0	3	0	**3**	0	0	0	**0**	0	0	2	**2**	**13**			0	0	0	0
12:00	0	0	0	**0**	0	0	0	**0**	0	0	0	**0**	0	0	0	**0**	**0**			0	0	0	0
12:15	0	1	0	**1**	0	0	0	**0**	0	0	0	**0**	0	0	0	**0**	**1**			0	0	0	0
12:30	0	1	0	**1**	0	0	0	**0**	0	0	0	**0**	0	0	0	**0**	**1**			0	0	0	0
12:45	0	0	0	**0**	0	0	0	**0**	0	0	0	**0**	0	0	0	**0**	**0**	2		0	0	0	0
13:00	0	0	0	**0**	0	0	0	**0**	0	0	0	**0**	0	0	0	**0**	**0**	2		0	0	0	0
13:15	0	0	0	**0**	0	0	0	**0**	0	0	0	**0**	0	0	1	**1**	**1**	2		0	0	0	0
13:30	0	1	0	**1**	0	1	0	**1**	0	0	0	**0**	0	0	0	**0**	**2**	3		0	0	0	0
13:45	0	0	0	**0**	0	1	0	**1**	0	0	0	**0**	0	0	0	**0**	**1**	4		0	0	0	0
14:00	0	0	0	**0**	0	0	0	**0**	0	0	0	**0**	0	0	0	**0**	**0**	4	*	0	0	0	0
14:15	0	0	0	**0**	0	0	0	**0**	0	0	0	**0**	0	0	0	**0**	**0**	3	+	0	0	0	0
14:30	0	0	0	**0**	0	0	0	**0**	0	0	0	**0**	0	0	0	**0**	**0**	1	*	0	0	0	0
14:45	0	2	0	**2**	0	2	0	**2**	0	0	0	**0**	0	0	0	**0**	**4**	4	*	0	0	0	0
n/a																							
n/a																							
n/a																							
n/a																							
Total	0	5	0	**5**	0	4	0	**4**	0	0	0	**0**	0	0	1	**1**	**10**			0	0	0	0
n/a																							
n/a																							
n/a																							
n/a																							
n/a																							
n/a																							
n/a																							
n/a																							
n/a																							
n/a																							
n/a																							
n/a																							
n/a																							
n/a																							
n/a																							
n/a																							
n/a																							
n/a																							
Total																							

AM Peak Period
RVs

3rd Avenue @ Redford Street
Tuesday, September 26, 2017

Time Period Begins	Redford St NORTH Approach				Redford St SOUTH Approach				3rd Ave WEST Approach				3rd Ave EAST Approach				Total Volume		Peak					Conflict	
	Left	Thru	Right	Total	Left	Thru	Right	Total	Left	Thru	Right	Total	Left	Thru	Right	Total	15-min	Hour		N	S	W	E	15 min	Hr
7:00	0	0	0	0	0	0	0	0	0	0	0	0	0	0	0	0	0			0	0	0	0	0	
7:15	0	0	0	0	0	0	0	0	0	0	0	0	0	0	0	0	0			0	0	0	0	0	
7:30	0	0	0	0	0	0	0	0	0	0	0	0	0	0	0	0	0			0	0	0	0	0	
7:45	0	0	0	0	0	0	0	0	0	0	0	0	0	0	0	0	0	0		0	0	0	0	0	0
8:00	0	0	0	0	0	0	0	0	0	0	0	0	0	0	0	0	0	0		0	0	0	0	0	0
8:15	0	0	0	0	0	1	0	1	0	0	0	0	0	0	0	0	1	1		0	0	0	0	1	1
8:30	0	0	0	0	0	0	0	0	0	0	0	0	0	0	0	0	0	1		0	0	0	0	0	1
8:45	0	1	0	1	0	0	0	0	0	0	0	0	0	0	0	0	1	2		0	0	0	0	1	2
9:00	0	0	0	0	0	0	0	0	0	0	0	0	0	0	0	0	0	2		0	0	0	0	0	2
9:15	0	0	0	0	0	0	0	0	0	0	0	0	0	0	0	0	0	1		0	0	0	0	0	1
9:30	0	0	0	0	0	0	0	0	0	0	0	0	0	0	0	0	0	1		0	0	0	0	0	1
9:45	0	0	0	0	0	0	0	0	0	0	0	0	0	0	0	0	0	0		0	0	0	0	0	0
10:00	0	1	0	1	0	0	0	0	0	0	0	0	0	0	0	0	1	1		0	0	0	0	1	1
10:15	0	0	0	0	0	0	0	0	0	0	0	0	0	0	0	0	0	1		0	0	0	0	0	1
10:30	1	1	0	2	0	0	0	0	0	0	0	0	0	0	1	1	3	4		0	0	0	0	2	3
10:45	0	0	0	0	0	0	0	0	0	0	0	0	0	0	0	0	0	4		0	0	0	0	0	3
11:00	0	0	0	0	0	0	0	0	0	0	0	0	0	0	0	0	0	3	*	0	0	0	0	0	2
11:15	0	1	0	1	0	0	0	0	0	0	0	0	0	0	0	0	1	4	*	0	0	0	0	1	3
11:30	0	2	0	2	0	2	0	2	0	0	0	0	0	0	1	1	5	6	*	0	0	0	0	3	4
11:45	0	1	0	1	0	0	0	0	0	0	0	0	0	0	0	0	1	7	+	0	0	0	0	1	5
Total	1	7	0	**8**	0	3	0	**3**	0	0	0	**0**	0	0	2	**2**	13			0	0	0	0		9
Avg Hr	0	1	0	**2**	0	1	0	**1**	0	0	0	**0**	0	0	0	**0**	3			0	0	0	0		

Peak hour of the intersection

Pk Hr	0	4	0	4	0	2	0	2	0	0	0	0	0	0	1	1	7	*		0	0	0	0		5
15x4	0	8	0	8	0	8	0	8	0	0	0	0	0	0	4	4	20	+		0	0	0	0		12
PHF	n/a	0.50	n/a	**0.50**	n/a	0.25	n/a	**0.25**	n/a	n/a	n/a	**n/a**	n/a	n/a	0.25	**0.25**	0.35			n/a	n/a	n/a	n/a		0.42

Peak hour of conflicting volumes for the intersection

Pk Hr	0	4	0	4	0	2	0	2	0	0	0	0	0	0	1	1	7	*		0	0	0	0		5
15x4	0	8	0	8	0	8	0	8	0	0	0	0	0	0	4	4	20	+		0	0	0	0		12
PHF	n/a	0.50	n/a	**0.50**	n/a	0.25	n/a	**0.25**	n/a	n/a	n/a	**n/a**	n/a	n/a	0.25	**0.25**	0.35			n/a	n/a	n/a	n/a		0.42

** Calculated peak hour occurs during the first or last hour of shift and therefore may be invalid. **

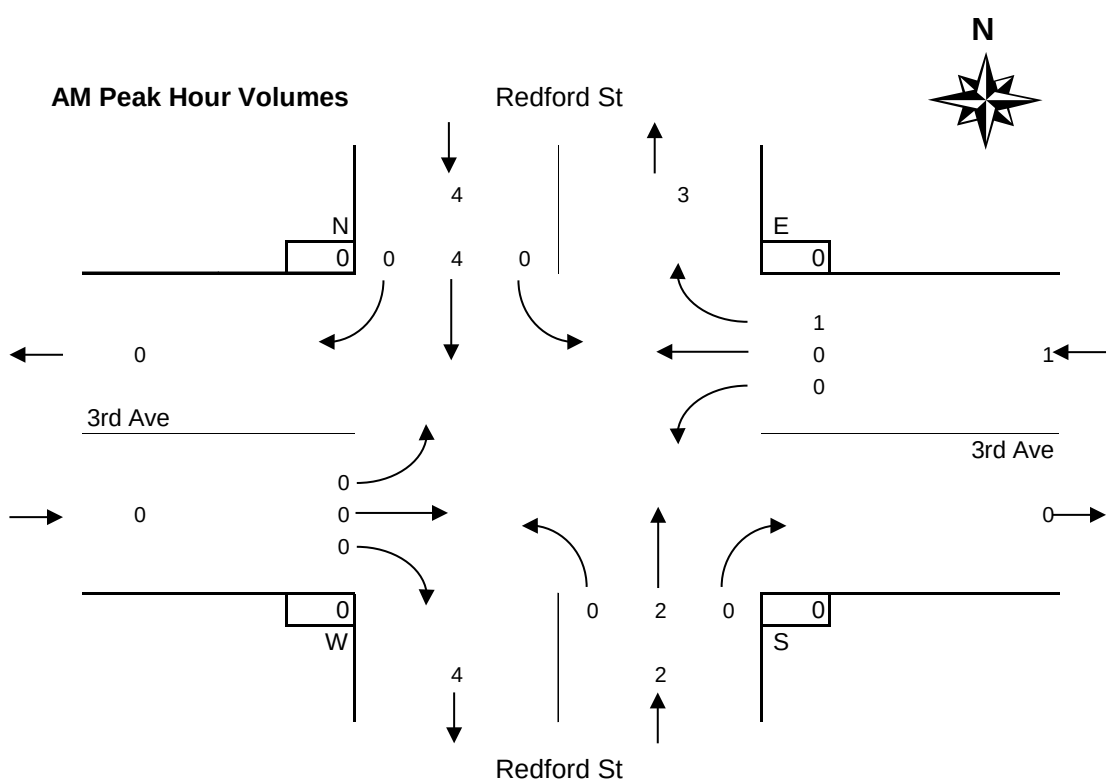

MD Peak Period
RVs

3rd Avenue @ Redford Street
Tuesday, September 26, 2017

Time Period Begins	Redford St NORTH Approach				Redford St SOUTH Approach				3rd Ave WEST Approach				3rd Ave EAST Approach				Total Volume		Peak					Conflict	
	Left	Thru	Right	Total	Left	Thru	Right	Total	Left	Thru	Right	Total	Left	Thru	Right	Total	15-min	Hour		N	S	W	E	15 min	Hr
12:00	0	0	0	0	0	0	0	0	0	0	0	0	0	0	0	0	0			0	0	0	0	0	
12:15	0	1	0	1	0	0	0	0	0	0	0	0	0	0	0	0	1			0	0	0	0	1	
12:30	0	1	0	1	0	0	0	0	0	0	0	0	0	0	0	0	1			0	0	0	0	1	
12:45	0	0	0	0	0	0	0	0	0	0	0	0	0	0	0	0	0	2		0	0	0	0	0	2
13:00	0	0	0	0	0	0	0	0	0	0	0	0	0	0	0	0	0	2		0	0	0	0	0	2
13:15	0	0	0	0	0	0	0	0	0	0	0	0	0	0	1	1	1	2		0	0	0	0	1	2
13:30	0	1	0	1	0	1	0	1	0	0	0	0	0	0	0	0	2	3		0	0	0	0	1	2
13:45	0	0	0	0	0	1	0	1	0	0	0	0	0	0	0	0	1	4		0	0	0	0	1	3
14:00	0	0	0	0	0	0	0	0	0	0	0	0	0	0	0	0	0	4	*	0	0	0	0	0	3
14:15	0	0	0	0	0	0	0	0	0	0	0	0	0	0	0	0	0	3	+	0	0	0	0	0	2
14:30	0	0	0	0	0	0	0	0	0	0	0	0	0	0	0	0	0	1	*	0	0	0	0	0	1
14:45	0	2	0	2	0	2	0	2	0	0	0	0	0	0	0	0	4	4	*	0	0	0	0	2	2
n/a																									
n/a																									
n/a																									
n/a																									
Total	0	5	0	**5**	0	4	0	**4**	0	0	0	**0**	0	0	1	**1**	10			0	0	0	0		6
Avg Hr	0	2	0	**2**	0	1	0	**1**	0	0	0	**0**	0	0	0	**0**	3			0	0	0	0		

Peak hour of the intersection

Pk Hr	0	2	0	2	0	2	0	2	0	0	0	0	0	0	0	0	4	*		0	0	0	0		2
15x4	0	8	0	8	0	8	0	8	0	0	0	0	0	0	0	0	16	+		0	0	0	0		8
PHF	n/a	0.25	n/a	**0.25**	n/a	0.25	n/a	**0.25**	n/a	n/a	n/a	**n/a**	n/a	n/a	n/a	**n/a**	0.25			n/a	n/a	n/a	n/a		0.25

Peak hour of conflicting volumes for the intersection

Pk Hr	0	2	0	2	0	2	0	2	0	0	0	0	0	0	0	0	4	*		0	0	0	0		2
15x4	0	8	0	8	0	8	0	8	0	0	0	0	0	0	0	0	16	+		0	0	0	0		8
PHF	n/a	0.25	n/a	**0.25**	n/a	0.25	n/a	**0.25**	n/a	n/a	n/a	**n/a**	n/a	n/a	n/a	**n/a**	0.25			n/a	n/a	n/a	n/a		0.25

** Calculated peak hour occurs during the first or last hour of shift and therefore may be invalid. **

MD Peak Hour Volumes

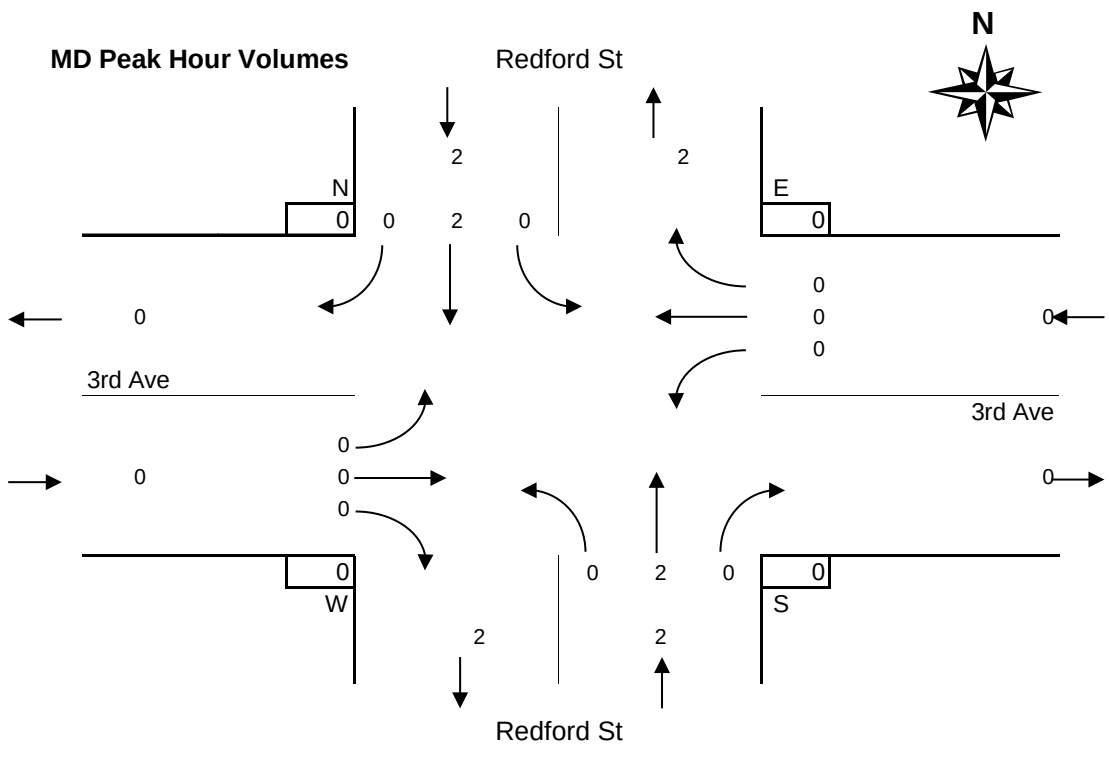

PM Peak Period
RVs

3rd Avenue @ Redford Street
Tuesday, September 26, 2017

Time Period Begins	Redford St NORTH Approach				Redford St SOUTH Approach				3rd Ave WEST Approach				3rd Ave EAST Approach				Total Volume		Peak					Conflict	
	Left	Thru	Right	Total	Left	Thru	Right	Total	Left	Thru	Right	Total	Left	Thru	Right	Total	15-min	Hour		N	S	W	E	15 min	Hr
n/a																									
n/a																									
n/a																									
n/a																									
n/a																									
n/a																									
n/a																									
n/a																									
n/a																									
n/a																									
n/a																									
n/a																									
n/a																									
n/a																									
n/a																									
n/a																									
n/a																									
n/a																									
n/a																									
Total																									0
Avg Hr																									

Peak hour of the intersection

Pk Hr																		*							0
15x4																		+							0
PHF																									n/a

Peak hour of conflicting volumes for the intersection

Pk Hr																		*							0
15x4																		+							0
PHF																									n/a

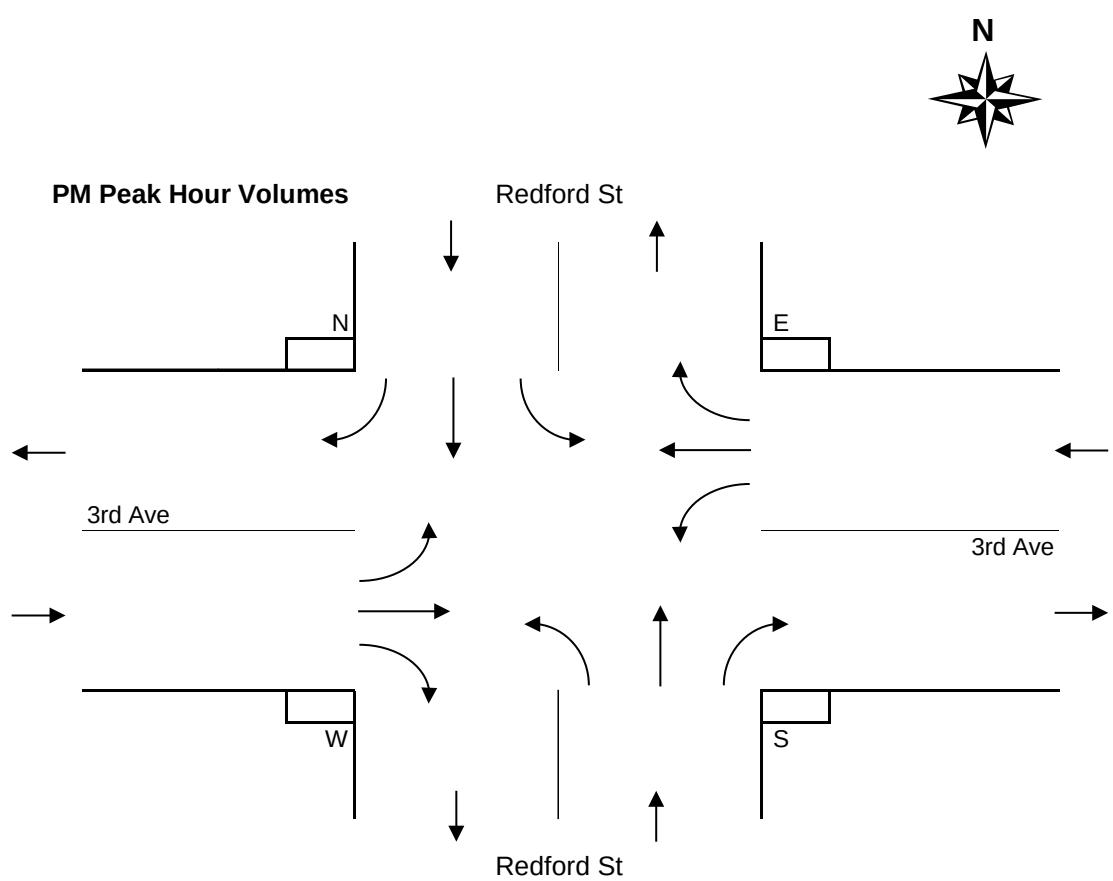

Period Hourly Averages
RVs

3rd Avenue @ Redford Street
Tuesday, September 26, 2017

Entire Survey Period

8 Hours

	Redford St				Redford St				3rd Ave				3rd Ave							
	NORTH Approach				SOUTH Approach				WEST Approach				EAST Approach				Total			
	Left	Thru	Right	Total	Left	Thru	Right	Total	Left	Thru	Right	Total	Left	Thru	Right	Total	Volume	N	S	W	E
Total	1	12	0	**13**	0	7	0	**7**	0	0	0	**0**	0	0	3	**3**	23	0	0	0	0
Avg Hr	0	2	0	**2**	0	1	0	**1**	0	0	0	**0**	0	0	0	**0**	3	0	0	0	0

AM Peak Period

5 Hours

	Redford St				Redford St				3rd Ave				3rd Ave							
	NORTH Approach				SOUTH Approach				WEST Approach				EAST Approach				Total			
Totals	Left	Thru	Right	Total	Left	Thru	Right	Total	Left	Thru	Right	Total	Left	Thru	Right	Total	Volume	N	S	W	E
Period	1	7	0	**8**	0	3	0	**3**	0	0	0	**0**	0	0	2	**2**	13	0	0	0	0
Avg Hr	0	1	0	**2**	0	1	0	**1**	0	0	0	**0**	0	0	0	**0**	3	0	0	0	0

MD Peak Period

3 Hours

	Redford St				Redford St				3rd Ave				3rd Ave							
	NORTH Approach				SOUTH Approach				WEST Approach				EAST Approach				Total			
Totals	Left	Thru	Right	Total	Left	Thru	Right	Total	Left	Thru	Right	Total	Left	Thru	Right	Total	Volume	N	S	W	E
Total	0	5	0	**5**	0	4	0	**4**	0	0	0	**0**	0	0	1	**1**	10	0	0	0	0
Avg Hr	0	2	0	**2**	0	1	0	**1**	0	0	0	**0**	0	0	0	**0**	3	0	0	0	0

PM Peak Period

Hours

	Redford St				Redford St				3rd Ave				3rd Ave							
	NORTH Approach				SOUTH Approach				WEST Approach				EAST Approach				Total			
Totals	Left	Thru	Right	Total	Left	Thru	Right	Total	Left	Thru	Right	Total	Left	Thru	Right	Total	Volume	N	S	W	E
Total																					
Avg Hr																					

Average Hour Volumes

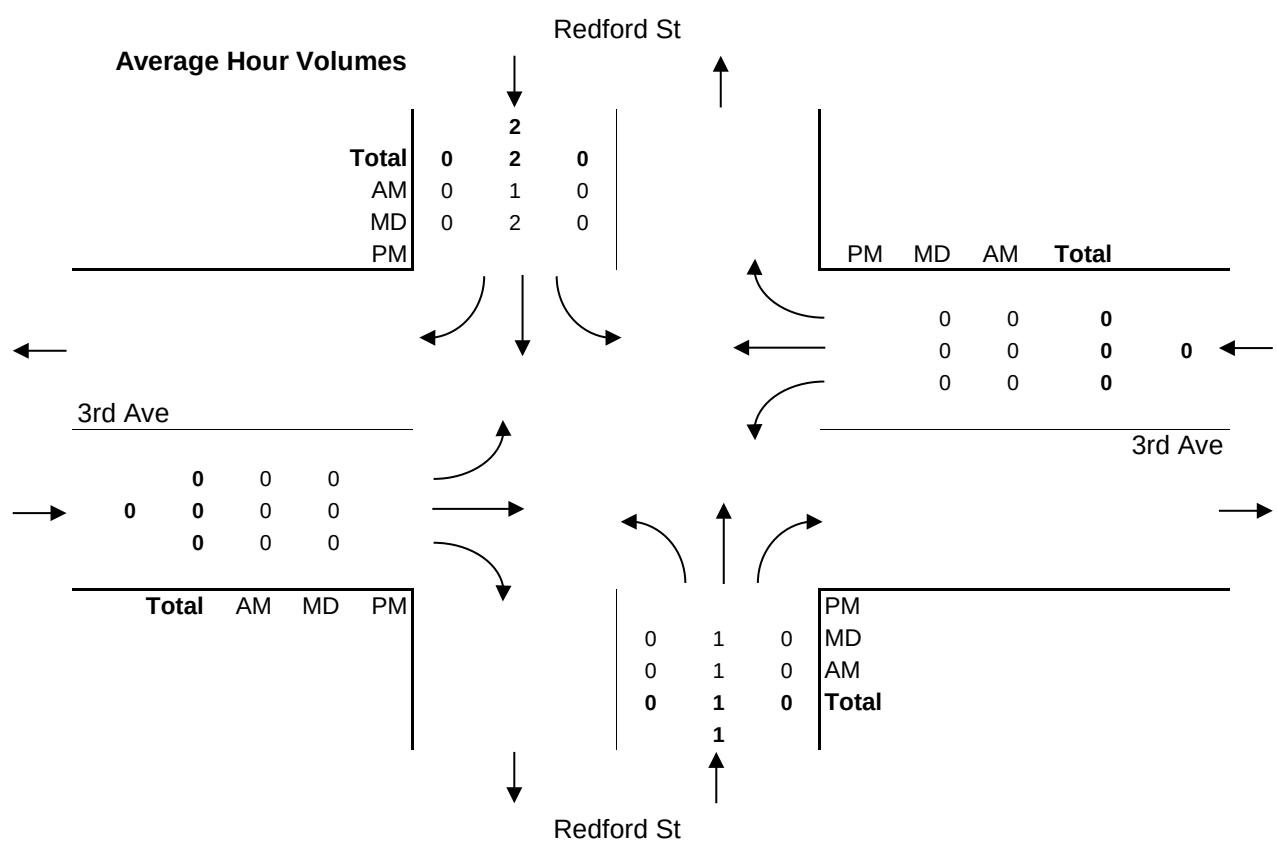

Vehicle Turning Movement Survey
With Classification

Major Route: 3rd Avenue
Minor Route: Redford Street
Municipality: Port Alberni
Filename: 1-3rd Ave @ Redford St-Sep 26, 2017.xlsx
Location #: 1

Date: September 26, 2017
Day-of-week: Tuesday

East/West Route: 3rd Avenue
Intersection Type: 4-leg
Signalized?: Yes
Weather: Clear and dry

Vehicle Classifications: Regular Vehicles
Buses
Articulated Trucks
Cube Trucks
Dump Trucks
Emergency Trucks
Garbage Trucks
Logging Trucks
RVs
Utility Trucks

This data is for Utility Trucks

Shift	Start	End	Duration
AM	7:00	12:00	5.00
MD	12:00	15:00	3.00
PM			
Total	**7:00**		**8.00**

Notes: 24-hour clock used for reporting (15-minute increments)
North Approach - southbound vehicles approaching intersection from the north
15x4 - 15 min volume (from maximum 15 minute period of movement/approach in peak hour period [*]) x 4
Pedestrians - N indicates pedestrians crossing north approach (east/west)

Comments:

Survey Data
Utility Trucks

3rd Avenue @ Redford Street
Tuesday, September 26, 2017

Time	Redford St				Redford St				3rd Ave				3rd Ave										
Period	NORTH Approach				SOUTH Approach				WEST Approach				EAST Approach				Total Volume		Peak				
Begins	Left	Thru	Right	Total	Left	Thru	Right	Total	Left	Thru	Right	Total	Left	Thru	Right	Total	15-min	Hour		N	S	W	E
7:00	0	0	0	**0**	0	1	0	**1**	0	0	2	**2**	0	0	0	**0**	**3**			0	0	0	0
7:15	1	1	0	**2**	1	1	0	**2**	0	0	0	**0**	0	0	1	**1**	**5**			0	0	0	0
7:30	0	2	0	**2**	0	3	0	**3**	0	0	0	**0**	1	0	1	**2**	**7**			0	0	0	0
7:45	0	4	0	**4**	0	1	0	**1**	1	0	0	**1**	1	0	0	**1**	**7**	22		0	0	0	0
8:00	1	1	0	**2**	0	1	1	**2**	0	0	0	**0**	0	0	0	**0**	**4**	23		0	0	0	0
8:15	0	4	0	**4**	0	3	0	**3**	0	0	0	**0**	0	0	1	**1**	**8**	26		0	0	0	0
8:30	0	4	0	**4**	0	2	0	**2**	0	0	0	**0**	0	0	0	**0**	**6**	25		0	0	0	0
8:45	0	1	0	**1**	0	1	1	**2**	0	0	0	**0**	1	0	0	**1**	**4**	22		0	0	0	0
9:00	3	1	0	**4**	0	4	0	**4**	0	0	1	**1**	0	0	1	**1**	**10**	28		0	0	0	0
9:15	0	2	0	**2**	0	4	0	**4**	0	0	0	**0**	0	0	1	**1**	**7**	27		0	0	0	0
9:30	0	4	0	**4**	0	2	0	**2**	0	0	0	**0**	0	0	0	**0**	**6**	27		0	0	0	0
9:45	1	1	0	**2**	0	0	2	**2**	0	0	0	**0**	2	0	1	**3**	**7**	30		0	0	0	0
10:00	0	1	0	**1**	0	4	1	**5**	0	0	0	**0**	0	0	0	**0**	**6**	26		0	0	0	0
10:15	0	1	0	**1**	0	0	1	**1**	0	0	0	**0**	1	0	2	**3**	**5**	24		0	0	0	0
10:30	0	2	0	**2**	0	3	0	**3**	0	0	0	**0**	0	0	1	**1**	**6**	24		0	0	0	0
10:45	0	0	0	**0**	0	2	1	**3**	0	0	0	**0**	1	0	1	**2**	**5**	22		0	0	0	0
11:00	1	5	0	**6**	2	2	1	**5**	1	0	0	**1**	0	0	1	**1**	**13**	29	*	0	0	0	0
11:15	0	1	0	**1**	0	1	1	**2**	0	0	1	**1**	1	1	2	**4**	**8**	32	*	0	0	0	0
11:30	0	1	0	**1**	0	0	1	**1**	0	1	0	**1**	1	0	0	**1**	**4**	30	*	0	0	0	0
11:45	0	0	0	**0**	0	1	2	**3**	0	0	1	**1**	1	1	1	**3**	**7**	32	+	0	0	0	0
Total	7	36	0	**43**	3	36	12	**51**	2	1	5	**8**	10	2	14	**26**	**128**			0	0	0	0
12:00	1	4	0	**5**	0	0	0	**0**	0	0	0	**0**	2	0	2	**4**	**9**			0	0	0	0
12:15	0	4	0	**4**	0	1	0	**1**	0	0	0	**0**	0	0	0	**0**	**5**			0	0	0	0
12:30	0	0	0	**0**	0	1	1	**2**	0	0	0	**0**	2	0	0	**2**	**4**			0	0	0	0
12:45	0	1	0	**1**	0	2	0	**2**	0	0	0	**0**	1	0	0	**1**	**4**	22		0	0	0	0
13:00	0	0	0	**0**	0	2	2	**4**	0	0	0	**0**	0	0	1	**1**	**5**	18		0	0	0	0
13:15	1	0	0	**1**	0	1	0	**1**	0	0	0	**0**	1	1	0	**2**	**4**	17		0	0	0	0
13:30	0	0	0	**0**	0	0	0	**0**	0	1	0	**1**	2	0	0	**2**	**3**	16		0	0	0	0
13:45	1	1	0	**2**	0	0	2	**2**	0	0	0	**0**	0	0	0	**0**	**4**	16		0	0	0	0
14:00	0	3	0	**3**	0	2	0	**2**	0	0	0	**0**	1	0	0	**1**	**6**	17	*	0	0	0	0
14:15	0	2	0	**2**	0	4	1	**5**	0	0	0	**0**	2	0	0	**2**	**9**	22	+	0	0	0	0
14:30	0	3	0	**3**	0	2	0	**2**	0	0	0	**0**	0	0	0	**0**	**5**	24	*	0	0	0	0
14:45	0	1	0	**1**	1	2	0	**3**	0	0	0	**0**	2	0	0	**2**	**6**	26	*	0	0	0	0
n/a																							
n/a																							
n/a																							
n/a																							
Total	3	19	0	**22**	1	17	6	**24**	0	1	0	**1**	13	1	3	**17**	**64**			0	0	0	0
n/a																							
n/a																							
n/a																							
n/a																							
n/a																							
n/a																							
n/a																							
n/a																							
n/a																							
n/a																							
n/a																							
n/a																							
n/a																							
n/a																							
n/a																							
n/a																							
n/a																							
n/a																							
Total																							

AM Peak Period
Utility Trucks

3rd Avenue @ Redford Street
Tuesday, September 26, 2017

Time Period Begins	Redford St NORTH Approach				Redford St SOUTH Approach				3rd Ave WEST Approach				3rd Ave EAST Approach				Total Volume		Peak					Conflict	
	Left	Thru	Right	Total	Left	Thru	Right	Total	Left	Thru	Right	Total	Left	Thru	Right	Total	15-min	Hour		N	S	W	E	15 min	Hr
7:00	0	0	0	0	0	1	0	1	0	0	2	2	0	0	0	0	3			0	0	0	0	3	
7:15	1	1	0	2	1	1	0	2	0	0	0	0	0	0	1	1	5			0	0	0	0	3	
7:30	0	2	0	2	0	3	0	3	0	0	0	0	1	0	1	2	7			0	0	0	0	4	
7:45	0	4	0	4	0	1	0	1	1	0	0	1	1	0	0	1	7	22		0	0	0	0	5	15
8:00	1	1	0	2	0	1	1	2	0	0	0	0	0	0	0	0	4	23		0	0	0	0	3	15
8:15	0	4	0	4	0	3	0	3	0	0	0	0	0	0	1	1	8	26		0	0	0	0	5	17
8:30	0	4	0	4	0	2	0	2	0	0	0	0	0	0	0	0	6	25		0	0	0	0	4	17
8:45	0	1	0	1	0	1	1	2	0	0	0	0	1	0	0	1	4	22		0	0	0	0	3	15
9:00	3	1	0	4	0	4	0	4	0	0	1	1	0	0	1	1	10	28		0	0	0	0	8	20
9:15	0	2	0	2	0	4	0	4	0	0	0	0	0	0	1	1	7	27		0	0	0	0	5	20
9:30	0	4	0	4	0	2	0	2	0	0	0	0	0	0	0	0	6	27		0	0	0	0	4	20
9:45	1	1	0	2	0	0	2	2	0	0	0	0	2	0	1	3	7	30		0	0	0	0	5	22
10:00	0	1	0	1	0	4	1	5	0	0	0	0	0	0	0	0	6	26		0	0	0	0	5	19
10:15	0	1	0	1	0	0	1	1	0	0	0	0	1	0	2	3	5	24		0	0	0	0	3	17
10:30	0	2	0	2	0	3	0	3	0	0	0	0	0	0	1	1	6	24		0	0	0	0	4	17
10:45	0	0	0	0	0	2	1	3	0	0	0	0	1	0	1	2	5	22		0	0	0	0	4	16
11:00	1	5	0	6	2	2	1	5	1	0	0	1	0	0	1	1	13	29	*	0	0	0	0	9	20
11:15	0	1	0	1	0	1	1	2	0	0	1	1	1	1	2	4	8	32	*	0	0	0	0	5	22
11:30	0	1	0	1	0	0	1	1	0	1	0	1	1	0	0	1	4	30	*	0	0	0	0	3	21
11:45	0	0	0	0	0	1	2	3	0	0	1	1	1	1	1	3	7	32	+	0	0	0	0	5	22
Total	7	36	0	**43**	3	36	12	**51**	2	1	5	**8**	10	2	14	**26**	128			0	0	0	0		73
Avg Hr	1	7	0	**9**	1	7	2	**10**	0	0	1	**2**	2	0	3	**5**	26			0	0	0	0		

Peak hour of the intersection

Pk Hr	1	7	0	8	2	4	5	11	1	1	2	4	3	2	4	9	32	*		0	0	0	0		17
15x4	4	20	0	24	8	8	8	20	4	4	4	4	4	4	8	16	52	+		0	0	0	0		44
PHF	0.25	0.35	n/a	**0.33**	0.25	0.50	0.63	**0.55**	0.25	0.25	0.50	**1.00**	0.75	0.50	0.50	**0.56**	0.62			n/a	n/a	n/a	n/a		0.39

Peak hour of conflicting volumes for the intersection

Pk Hr	1	7	0	8	2	4	5	11	1	1	2	4	3	2	4	9	32	*		0	0	0	0		17
15x4	4	20	0	24	8	8	8	20	4	4	4	4	4	4	8	16	52	+		0	0	0	0		44
PHF	0.25	0.35	n/a	**0.33**	0.25	0.50	0.63	**0.55**	0.25	0.25	0.50	**1.00**	0.75	0.50	0.50	**0.56**	0.62			n/a	n/a	n/a	n/a		0.39

** Calculated peak hour occurs during the first or last hour of shift and therefore may be invalid. **

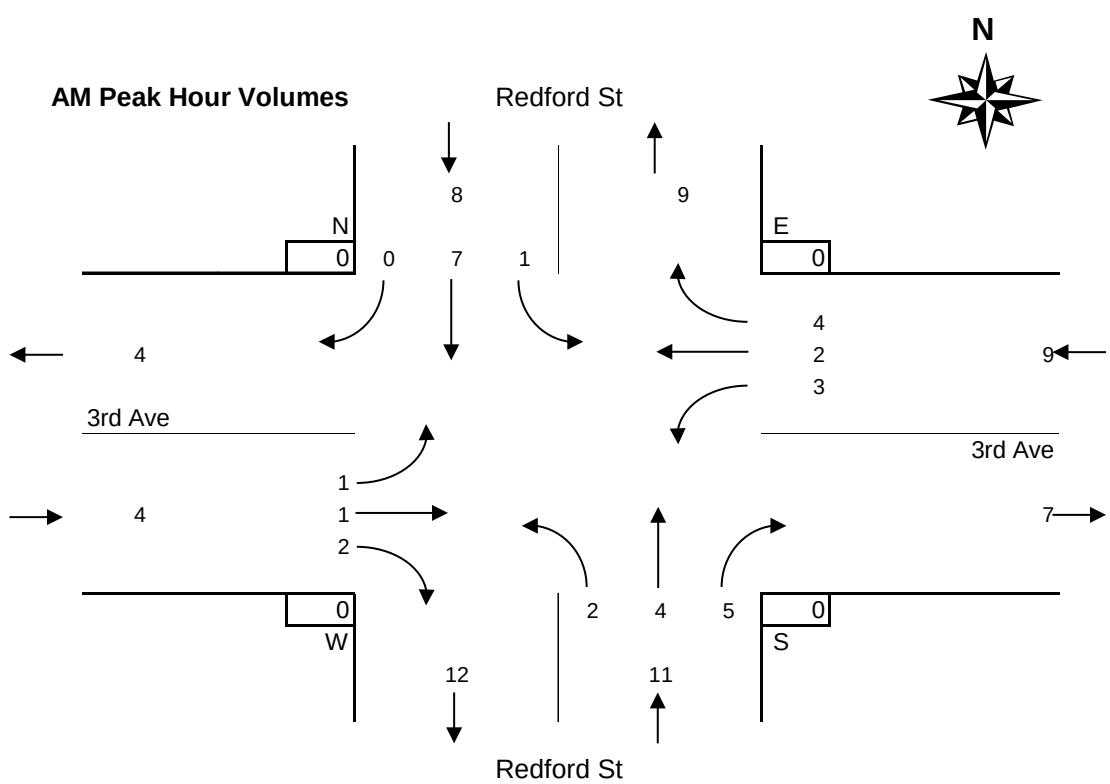

MD Peak Period
Utility Trucks

3rd Avenue @ Redford Street
Tuesday, September 26, 2017

Time Period Begins	Redford St NORTH Approach				Redford St SOUTH Approach				3rd Ave WEST Approach				3rd Ave EAST Approach				Total Volume		Peak					Conflict	
	Left	Thru	Right	Total	Left	Thru	Right	Total	Left	Thru	Right	Total	Left	Thru	Right	Total	15-min	Hour		N	S	W	E	15 min	Hr
12:00	1	4	0	5	0	0	0	0	0	0	0	0	2	0	2	4	9			0	0	0	0	6	
12:15	0	4	0	4	0	1	0	1	0	0	0	0	0	0	0	0	5			0	0	0	0	4	
12:30	0	0	0	0	0	1	1	2	0	0	0	0	2	0	0	2	4			0	0	0	0	4	
12:45	0	1	0	1	0	2	0	2	0	0	0	0	1	0	0	1	4	22		0	0	0	0	3	17
13:00	0	0	0	0	0	2	2	4	0	0	0	0	0	0	1	1	5	18		0	0	0	0	5	16
13:15	1	0	0	1	0	1	0	1	0	0	0	0	1	1	0	2	4	17		0	0	0	0	3	15
13:30	0	0	0	0	0	0	0	0	0	1	0	1	2	0	0	2	3	16		0	0	0	0	3	14
13:45	1	1	0	2	0	0	2	2	0	0	0	0	0	0	0	0	4	16		0	0	0	0	3	14
14:00	0	3	0	3	0	2	0	2	0	0	0	0	1	0	0	1	6	17	*	0	0	0	0	4	13
14:15	0	2	0	2	0	4	1	5	0	0	0	0	2	0	0	2	9	22	+	0	0	0	0	7	17
14:30	0	3	0	3	0	2	0	2	0	0	0	0	0	0	0	0	5	24	*	0	0	0	0	3	17
14:45	0	1	0	1	1	2	0	3	0	0	0	0	2	0	0	2	6	26	*	0	0	0	0	4	18
n/a																									
n/a																									
n/a																									
n/a																									
Total	3	19	0	**22**	1	17	6	**24**	0	1	0	**1**	13	1	3	**17**	64			0	0	0	0		40
Avg Hr	1	6	0	**7**	0	6	2	**8**	0	0	0	**0**	4	0	1	**6**	21			0	0	0	0		

Peak hour of the intersection

Pk Hr	0	9	0	9	1	10	1	12	0	0	0	0	5	0	0	5	26	*		0	0	0	0		16
15x4	0	12	0	12	4	16	4	20	0	0	0	0	8	0	0	8	36	+		0	0	0	0		28
PHF	n/a	0.75	n/a	**0.75**	0.25	0.63	0.25	**0.60**	n/a	n/a	n/a	**n/a**	0.63	n/a	n/a	**0.63**	0.72			n/a	n/a	n/a	n/a		0.57

Peak hour of conflicting volumes for the intersection

Pk Hr	0	9	0	9	1	10	1	12	0	0	0	0	5	0	0	5	26	*		0	0	0	0		16
15x4	0	12	0	12	4	16	4	20	0	0	0	0	8	0	0	8	36	+		0	0	0	0		28
PHF	n/a	0.75	n/a	**0.75**	0.25	0.63	0.25	**0.60**	n/a	n/a	n/a	**n/a**	0.63	n/a	n/a	**0.63**	0.72			n/a	n/a	n/a	n/a		0.57

** Calculated peak hour occurs during the first or last hour of shift and therefore may be invalid. **

MD Peak Hour Volumes

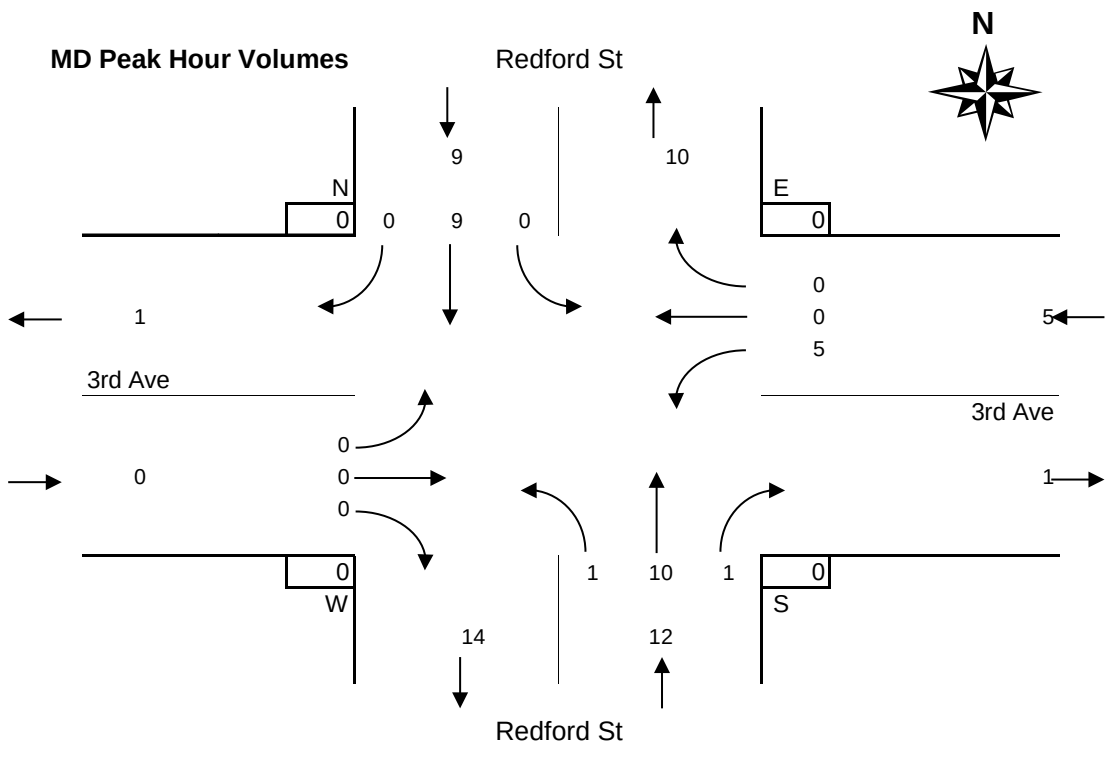

PM Peak Period
Utility Trucks

3rd Avenue @ Redford Street
Tuesday, September 26, 2017

Time Period Begins	Redford St NORTH Approach				Redford St SOUTH Approach				3rd Ave WEST Approach				3rd Ave EAST Approach				Total Volume		Peak					Conflict	
	Left	Thru	Right	Total	Left	Thru	Right	Total	Left	Thru	Right	Total	Left	Thru	Right	Total	15-min	Hour		N	S	W	E	15 min	Hr
n/a																									
n/a																									
n/a																									
n/a																									
n/a																									
n/a																									
n/a																									
n/a																									
n/a																									
n/a																									
n/a																									
n/a																									
n/a																									
n/a																									
n/a																									
n/a																									
n/a																									
n/a																									
n/a																									
Total																									0
Avg Hr																									

Peak hour of the intersection

Pk Hr																		*							0
15x4																		+							0
PHF																									n/a

Peak hour of conflicting volumes for the intersection

Pk Hr																		*							0
15x4																		+							0
PHF																									n/a

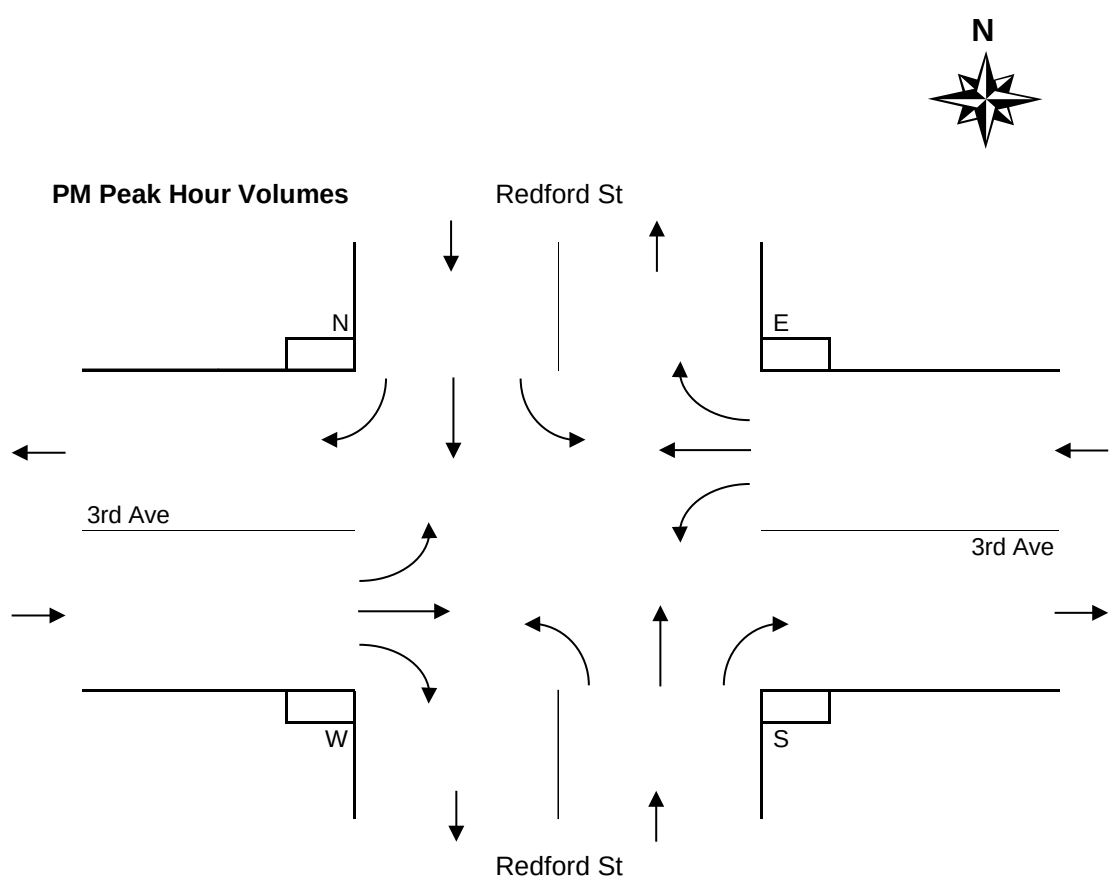

Period Hourly Averages
Utility Trucks

3rd Avenue @ Redford Street
Tuesday, September 26, 2017

Entire Survey Period

8 Hours

	Redford St				Redford St				3rd Ave				3rd Ave							
	NORTH Approach				SOUTH Approach				WEST Approach				EAST Approach				Total			
	Left	Thru	Right	Total	Left	Thru	Right	Total	Left	Thru	Right	Total	Left	Thru	Right	Total	Volume	N	S	W	E
Total	10	55	0	**65**	4	53	18	**75**	2	2	5	**9**	23	3	17	**43**	192	0	0	0	0
Avg Hr	1	7	0	**8**	1	7	2	**9**	0	0	1	**1**	3	0	2	**5**	24	0	0	0	0

AM Peak Period

5 Hours

	Redford St				Redford St				3rd Ave				3rd Ave							
	NORTH Approach				SOUTH Approach				WEST Approach				EAST Approach				Total			
Totals	Left	Thru	Right	Total	Left	Thru	Right	Total	Left	Thru	Right	Total	Left	Thru	Right	Total	Volume	N	S	W	E
Period	7	36	0	**43**	3	36	12	**51**	2	1	5	**8**	10	2	14	**26**	128	0	0	0	0
Avg Hr	1	7	0	**9**	1	7	2	**10**	0	0	1	**2**	2	0	3	**5**	26	0	0	0	0

MD Peak Period

3 Hours

	Redford St				Redford St				3rd Ave				3rd Ave							
	NORTH Approach				SOUTH Approach				WEST Approach				EAST Approach				Total			
Totals	Left	Thru	Right	Total	Left	Thru	Right	Total	Left	Thru	Right	Total	Left	Thru	Right	Total	Volume	N	S	W	E
Total	3	19	0	**22**	1	17	6	**24**	0	1	0	**1**	13	1	3	**17**	64	0	0	0	0
Avg Hr	1	6	0	**7**	0	6	2	**8**	0	0	0	**0**	4	0	1	**6**	21	0	0	0	0

PM Peak Period

Hours

	Redford St				Redford St				3rd Ave				3rd Ave							
	NORTH Approach				SOUTH Approach				WEST Approach				EAST Approach				Total			
Totals	Left	Thru	Right	Total	Left	Thru	Right	Total	Left	Thru	Right	Total	Left	Thru	Right	Total	Volume	N	S	W	E
Total																					
Avg Hr																					

Average Hour Volumes

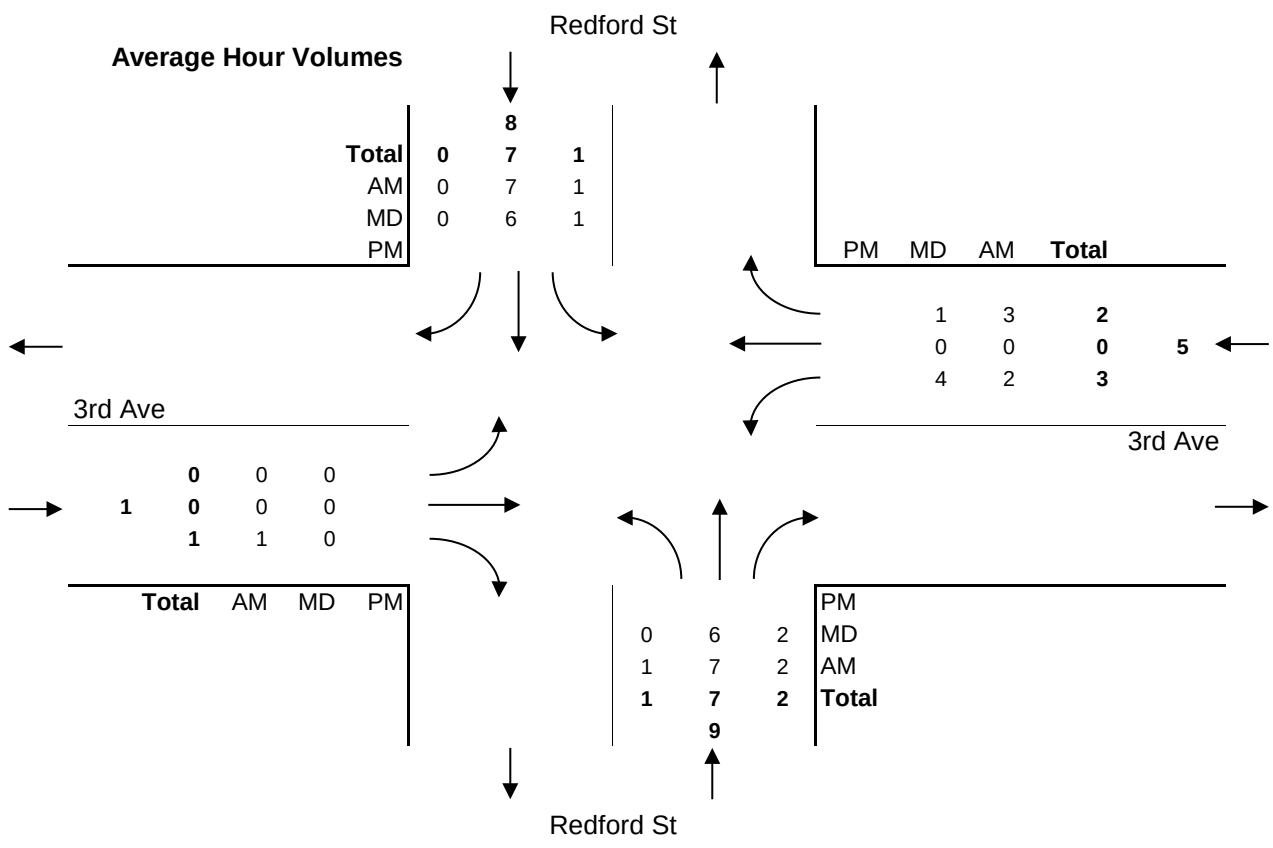

Vehicle Turning Movement Survey
With Classification

Major Route: 3rd Avenue
Minor Route: Redford Street
Municipality: Port Alberni
Filename: 1-3rd Ave @ Redford St-Sep 26, 2017.xlsx
Location #: 1

Date: September 26, 2017
Day-of-week: Tuesday

East/West Route: 3rd Avenue
Intersection Type: 4-leg
Signalized?: Yes
Weather: Clear and dry

Vehicle Classifications: Regular Vehicles
Buses
Articulated Trucks
Cube Trucks
Dump Trucks
Emergency Trucks
Garbage Trucks
Logging Trucks
RVs
Utility Trucks

This data is for All Vehicles Combined

Shift	Start	End	Duration
AM	7:00	12:00	5.00
MD	12:00	15:00	3.00
PM			
Total	**7:00**		**8.00**

Notes: 24-hour clock used for reporting (15-minute increments)
North Approach - southbound vehicles approaching intersection from the north
15x4 - 15 min volume (from maximum 15 minute period of movement/approach in peak hour period [*]) x 4
Pedestrians - N indicates pedestrians crossing north approach (east/west)

Comments:

Survey Data
All Vehicles Combined

3rd Avenue @ Redford Street
Tuesday, September 26, 2017

Time Period Begins	Redford St NORTH Approach				Redford St SOUTH Approach				3rd Ave WEST Approach				3rd Ave EAST Approach				Total Volume		Peak	Crosswalks			
	Left	Thru	Right	Total	Left	Thru	Right	Total	Left	Thru	Right	Total	Left	Thru	Right	Total	15-min	Hour		N	S	W	E
7:00	6	27	1	**34**	0	25	5	**30**	0	0	2	**2**	10	1	18	**29**	**95**			0	0	0	1
7:15	16	38	2	**56**	2	32	14	**48**	0	2	0	**2**	24	1	28	**53**	**159**			0	0	0	1
7:30	7	69	1	**77**	0	56	15	**71**	1	1	0	**2**	38	1	40	**79**	**229**			0	0	0	2
7:45	33	102	0	**135**	0	56	15	**71**	3	1	0	**4**	21	2	37	**60**	**270**	753		0	0	0	3
8:00	14	70	0	**84**	1	62	16	**79**	0	0	0	**0**	25	0	27	**52**	**215**	873		0	0	1	2
8:15	15	110	0	**125**	0	70	25	**95**	0	1	0	**1**	23	1	41	**65**	**286**	1000		0	0	0	1
8:30	28	90	1	**119**	1	82	25	**108**	0	0	1	**1**	19	1	52	**72**	**300**	1071		0	0	0	2
8:45	24	121	0	**145**	1	73	20	**94**	0	1	2	**3**	31	2	39	**72**	**314**	1115		0	1	0	3
9:00	25	87	1	**113**	0	83	19	**102**	0	1	3	**4**	36	0	25	**61**	**280**	1180		0	0	0	0
9:15	12	103	1	**116**	1	75	24	**100**	0	1	0	**1**	33	0	24	**57**	**274**	1168		0	0	0	4
9:30	18	91	1	**110**	0	76	26	**102**	0	0	3	**3**	29	1	32	**62**	**277**	1145		0	0	0	0
9:45	28	113	0	**141**	0	87	37	**124**	0	1	0	**1**	27	1	32	**60**	**326**	1157		0	0	0	0
10:00	16	101	2	**119**	0	108	27	**135**	1	2	0	**3**	20	0	41	**61**	**318**	1195		0	0	0	8
10:15	21	109	0	**130**	0	97	33	**130**	0	0	0	**0**	30	2	34	**66**	**326**	1247		0	0	0	2
10:30	25	103	1	**129**	0	105	33	**138**	0	0	0	**0**	18	2	32	**52**	**319**	1289		0	0	1	2
10:45	20	101	0	**121**	0	103	41	**144**	1	1	0	**2**	32	0	42	**74**	**341**	1304		0	1	0	2
11:00	19	109	0	**128**	3	101	39	**143**	2	1	0	**3**	28	3	35	**66**	**340**	1326	*	0	0	0	1
11:15	19	119	2	**140**	0	99	31	**130**	1	3	1	**5**	35	2	37	**74**	**349**	1349	*	0	0	0	2
11:30	23	104	0	**127**	0	113	44	**157**	1	4	0	**5**	29	0	39	**68**	**357**	1387	*	0	1	1	2
11:45	22	115	0	**137**	0	123	36	**159**	0	2	1	**3**	44	3	43	**90**	**389**	1435	+	0	1	0	2
Total	391	1882	13	**2286**	9	1626	525	**2160**	10	22	13	**45**	552	23	698	**1273**	**5764**			0	4	3	40
12:00	21	118	0	**139**	1	105	41	**147**	0	0	1	**1**	35	2	46	**83**	**370**			0	0	0	3
12:15	26	128	2	**156**	0	101	35	**136**	0	1	0	**1**	42	4	28	**74**	**367**			0	0	0	4
12:30	21	93	0	**114**	0	94	35	**129**	0	3	0	**3**	34	2	44	**80**	**326**			0	2	0	3
12:45	32	143	2	**177**	0	101	40	**141**	0	2	1	**3**	28	2	40	**70**	**391**	1454		0	1	3	4
13:00	25	108	1	**134**	0	123	41	**164**	1	2	2	**5**	44	1	46	**91**	**394**	1478		1	1	1	2
13:15	26	117	0	**143**	2	116	47	**165**	0	0	1	**1**	33	2	37	**72**	**381**	1492		0	0	1	0
13:30	26	96	1	**123**	0	98	34	**132**	1	4	1	**6**	27	1	30	**58**	**319**	1485		0	0	2	1
13:45	22	129	0	**151**	0	112	31	**143**	0	0	1	**1**	30	0	55	**85**	**380**	1474		0	1	0	1
14:00	20	97	2	**119**	0	135	36	**171**	0	3	0	**3**	36	0	44	**80**	**373**	1453	*	0	2	0	2
14:15	27	99	0	**126**	1	138	40	**179**	1	2	1	**4**	25	1	56	**82**	**391**	1463	+	0	1	1	2
14:30	29	124	0	**153**	0	111	48	**159**	1	0	1	**2**	31	3	39	**73**	**387**	1531	*	0	0	3	0
14:45	32	103	1	**136**	1	113	45	**159**	0	2	1	**3**	35	1	56	**92**	**390**	1541	*	0	0	0	1
n/a																							
n/a																							
n/a																							
n/a																							
Total	307	1355	9	**1671**	5	1347	473	**1825**	4	19	10	**33**	400	19	521	**940**	**4469**			1	8	11	23
n/a																							
n/a																							
n/a																							
n/a																							
n/a																							
n/a																							
n/a																							
n/a																							
n/a																							
n/a																							
n/a																							
n/a																							
n/a																							
n/a																							
n/a																							
n/a																							
n/a																							
n/a																							
Total																							

AM Peak Period
All Vehicles Combined

3rd Avenue @ Redford Street
Tuesday, September 26, 2017

Time Period Begins	Redford St NORTH Approach				Redford St SOUTH Approach				3rd Ave WEST Approach				3rd Ave EAST Approach				Total Volume		Peak	Crosswalks				Conflict	
	Left	Thru	Right	Total	Left	Thru	Right	Total	Left	Thru	Right	Total	Left	Thru	Right	Total	15-min	Hour		N	S	W	E	15 min	Hr
7:00	6	27	1	34	0	25	5	30	0	0	2	2	10	1	18	29	95			0	0	0	1	55	
7:15	16	38	2	56	2	32	14	48	0	2	0	2	24	1	28	53	159			0	0	0	1	91	
7:30	7	69	1	77	0	56	15	71	1	1	0	2	38	1	40	79	229			0	0	0	2	120	
7:45	33	102	0	135	0	56	15	71	3	1	0	4	21	2	37	60	270	753		0	0	0	3	146	412
8:00	14	70	0	84	1	62	16	79	0	0	0	0	25	0	27	52	215	873		0	0	1	2	119	476
8:15	15	110	0	125	0	70	25	95	0	1	0	1	23	1	41	65	286	1000		0	0	0	1	152	537
8:30	28	90	1	119	1	82	25	108	0	0	1	1	19	1	52	72	300	1071		0	0	0	2	188	605
8:45	24	121	0	145	1	73	20	94	0	1	2	3	31	2	39	72	314	1115		0	1	0	3	163	622
9:00	25	87	1	113	0	83	19	102	0	1	3	4	36	0	25	61	280	1180		0	0	0	0	167	670
9:15	12	103	1	116	1	75	24	100	0	1	0	1	33	0	24	57	274	1168		0	0	0	4	145	663
9:30	18	91	1	110	0	76	26	102	0	0	3	3	29	1	32	62	277	1145		0	0	0	0	153	628
9:45	28	113	0	141	0	87	37	124	0	1	0	1	27	1	32	60	326	1157		0	0	0	0	185	650
10:00	16	101	2	119	0	108	27	135	1	2	0	3	20	0	41	61	318	1195		0	0	0	8	193	676
10:15	21	109	0	130	0	97	33	130	0	0	0	0	30	2	34	66	326	1247		0	0	0	2	187	718
10:30	25	103	1	129	0	105	33	138	0	0	0	0	18	2	32	52	319	1289		0	0	1	2	197	762
10:45	20	101	0	121	0	103	41	144	1	1	0	2	32	0	42	74	341	1304		0	1	0	2	207	784
11:00	19	109	0	128	3	101	39	143	2	1	0	3	28	3	35	66	340	1326	*	0	0	0	1	199	790
11:15	19	119	2	140	0	99	31	130	1	3	1	5	35	2	37	74	349	1349	*	0	0	0	2	189	792
11:30	23	104	0	127	0	113	44	157	1	4	0	5	29	0	39	68	357	1387	*	0	1	1	2	220	815
11:45	22	115	0	137	0	123	36	159	0	2	1	3	44	3	43	90	389	1435	+	0	1	0	2	228	836
Total	391	1882	13	**2286**	9	1626	525	**2160**	10	22	13	**45**	552	23	698	**1273**	5764			0	4	3	40		3273
Avg Hr	78	376	3	**457**	2	325	105	**432**	2	4	3	**9**	110	5	140	**255**	1153			0	1	1	8		

Peak hour of the intersection

Pk Hr	83	447	2	532	3	436	150	589	4	10	2	16	136	8	154	298	1435	*		0	2	1	7		835
15x4	92	476	8	560	12	492	176	636	8	16	4	20	176	12	172	360	1556	+		0	4	4	8		956
PHF	0.90	0.94	0.25	**0.95**	0.25	0.89	0.85	**0.93**	0.50	0.63	0.50	**0.80**	0.77	0.67	0.90	**0.83**	0.92			n/a	0.50	0.25	0.88		0.87

Peak hour of conflicting volumes for the intersection

Pk Hr	83	447	2	532	3	436	150	589	4	10	2	16	136	8	154	298	1435	*		0	2	1	7		835
15x4	92	476	8	560	12	492	176	636	8	16	4	20	176	12	172	360	1556	+		0	4	4	8		956
PHF	0.90	0.94	0.25	**0.95**	0.25	0.89	0.85	**0.93**	0.50	0.63	0.50	**0.80**	0.77	0.67	0.90	**0.83**	0.92			n/a	0.50	0.25	0.88		0.87

** Calculated peak hour occurs during the first or last hour of shift and therefore may be invalid. **

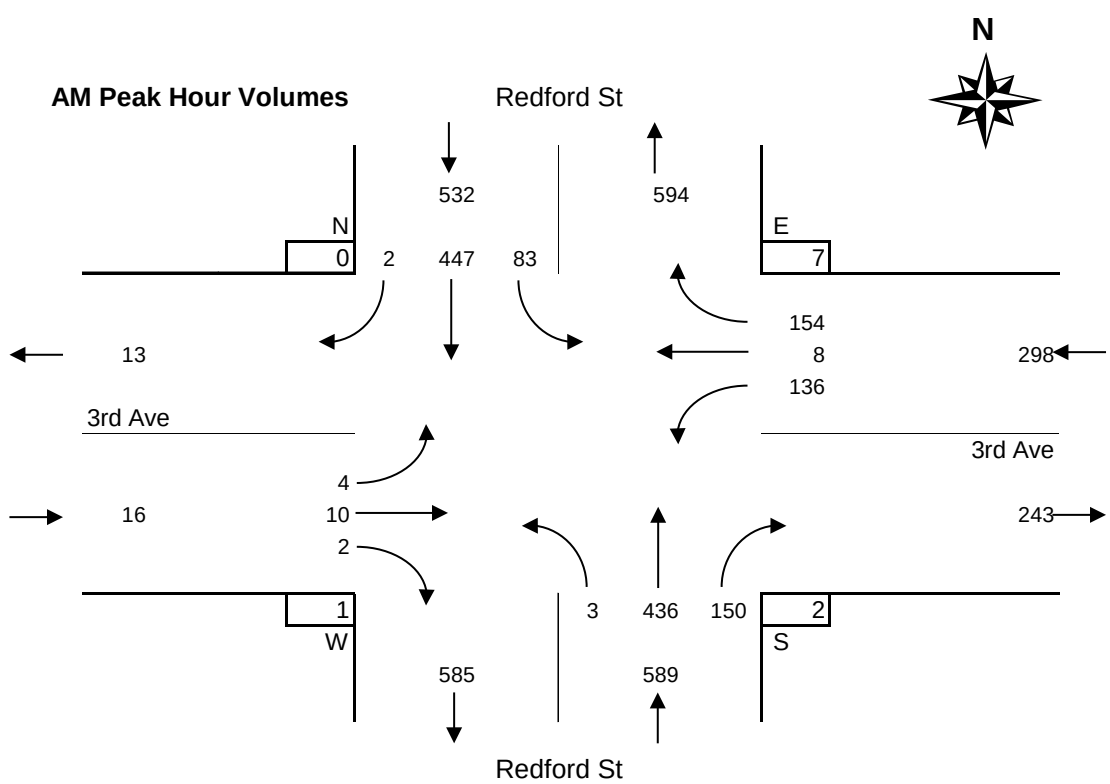

MD Peak Period
All Vehicles Combined

3rd Avenue @ Redford Street
Tuesday, September 26, 2017

Time Period Begins	Redford St NORTH Approach				Redford St SOUTH Approach				3rd Ave WEST Approach				3rd Ave EAST Approach				Total Volume		Peak	Crosswalks				Conflict	
	Left	Thru	Right	Total	Left	Thru	Right	Total	Left	Thru	Right	Total	Left	Thru	Right	Total	15-min	Hour		N	S	W	E	15 min	Hr
12:00	21	118	0	139	1	105	41	147	0	0	1	1	35	2	46	83	370			0	0	0	3	215	
12:15	26	128	2	156	0	101	35	136	0	1	0	1	42	4	28	74	367			0	0	0	4	205	
12:30	21	93	0	114	0	94	35	129	0	3	0	3	34	2	44	80	326			0	2	0	3	196	
12:45	32	143	2	177	0	101	40	141	0	2	1	3	28	2	40	70	391	1454		0	1	3	4	215	831
13:00	25	108	1	134	0	123	41	164	1	2	2	5	44	1	46	91	394	1478		1	1	1	2	237	853
13:15	26	117	0	143	2	116	47	165	0	0	1	1	33	2	37	72	381	1492		0	0	1	0	228	876
13:30	26	96	1	123	0	98	34	132	1	4	1	6	27	1	30	58	319	1485		0	0	2	1	190	870
13:45	22	129	0	151	0	112	31	143	0	0	1	1	30	0	55	85	380	1474		0	1	0	1	220	875
14:00	20	97	2	119	0	135	36	171	0	3	0	3	36	0	44	80	373	1453	*	0	2	0	2	235	873
14:15	27	99	0	126	1	138	40	179	1	2	1	4	25	1	56	82	391	1463	+	0	1	1	2	263	908
14:30	29	124	0	153	0	111	48	159	1	0	1	2	31	3	39	73	387	1531	*	0	0	3	0	231	949
14:45	32	103	1	136	1	113	45	159	0	2	1	3	35	1	56	92	390	1541	*	0	0	0	1	247	976
n/a																									
n/a																									
n/a																									
n/a																									
Total	307	1355	9	**1671**	5	1347	473	**1825**	4	19	10	**33**	400	19	521	**940**	4469			1	8	11	23		2671
Avg Hr	102	452	3	**557**	2	449	158	**608**	1	6	3	**11**	133	6	174	**313**	1490			0	3	4	8		

Peak hour of the intersection

Pk Hr	108	423	3	534	2	497	169	668	2	7	3	12	127	5	195	327	1541	*		0	3	4	5		976
15x4	128	496	8	612	4	552	192	716	4	12	4	16	144	12	224	368	1564	+		0	8	12	8		1112
PHF	0.84	0.85	0.38	**0.87**	0.50	0.90	0.88	**0.93**	0.50	0.58	0.75	**0.75**	0.88	0.42	0.87	**0.89**	0.99			n/a	0.38	0.33	0.63		0.88

Peak hour of conflicting volumes for the intersection

Pk Hr	108	423	3	534	2	497	169	668	2	7	3	12	127	5	195	327	1541	*		0	3	4	5		976
15x4	128	496	8	612	4	552	192	716	4	12	4	16	144	12	224	368	1564	+		0	8	12	8		1112
PHF	0.84	0.85	0.38	**0.87**	0.50	0.90	0.88	**0.93**	0.50	0.58	0.75	**0.75**	0.88	0.42	0.87	**0.89**	0.99			n/a	0.38	0.33	0.63		0.88

** Calculated peak hour occurs during the first or last hour of shift and therefore may be invalid. **

MD Peak Hour Volumes

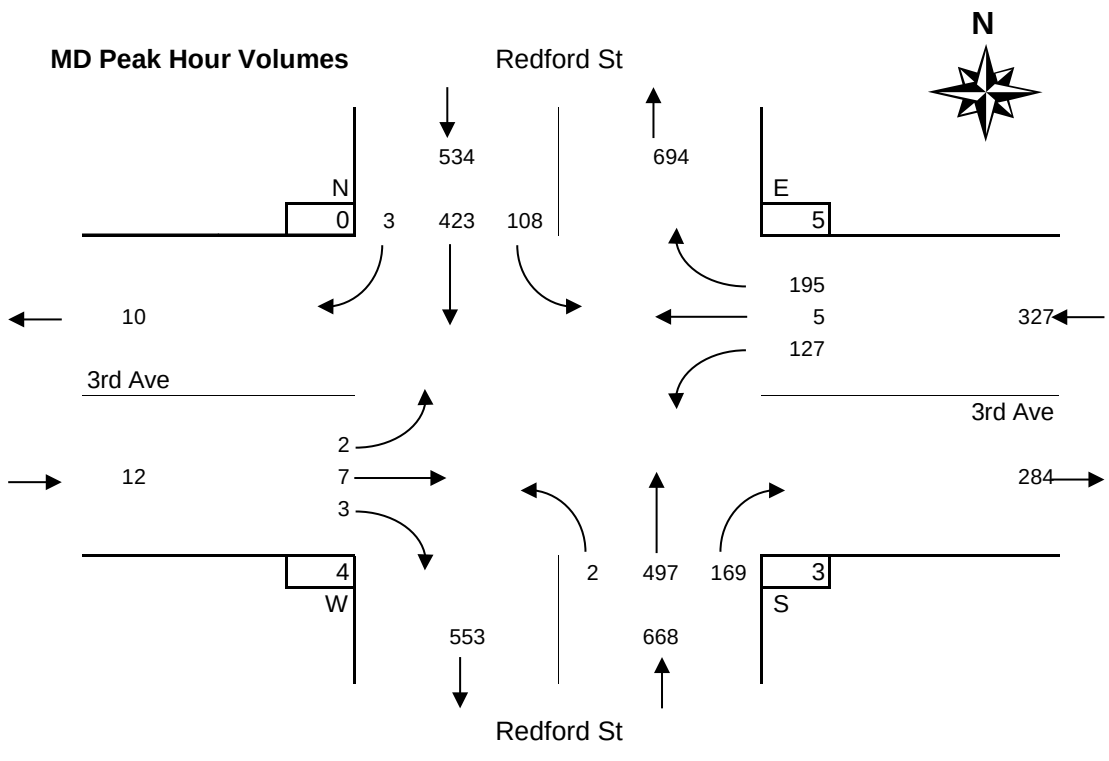

PM Peak Period
All Vehicles Combined

3rd Avenue @ Redford Street
Tuesday, September 26, 2017

Time Period Begins	Redford St NORTH Approach				Redford St SOUTH Approach				3rd Ave WEST Approach				3rd Ave EAST Approach				Total Volume		Peak	Crosswalks				Conflict	
	Left	Thru	Right	Total	Left	Thru	Right	Total	Left	Thru	Right	Total	Left	Thru	Right	Total	15-min	Hour		N	S	W	E	15 min	Hr
n/a																									
n/a																									
n/a																									
n/a																									
n/a																									
n/a																									
n/a																									
n/a																									
n/a																									
n/a																									
n/a																									
n/a																									
n/a																									
n/a																									
n/a																									
n/a																									
n/a																									
n/a																									
n/a																									
Total																									0
Avg Hr																									

Peak hour of the intersection

Pk Hr																		*							0
15x4																		+							0
PHF																									n/a

Peak hour of conflicting volumes for the intersection

Pk Hr																		*							0
15x4																		+							0
PHF																									n/a

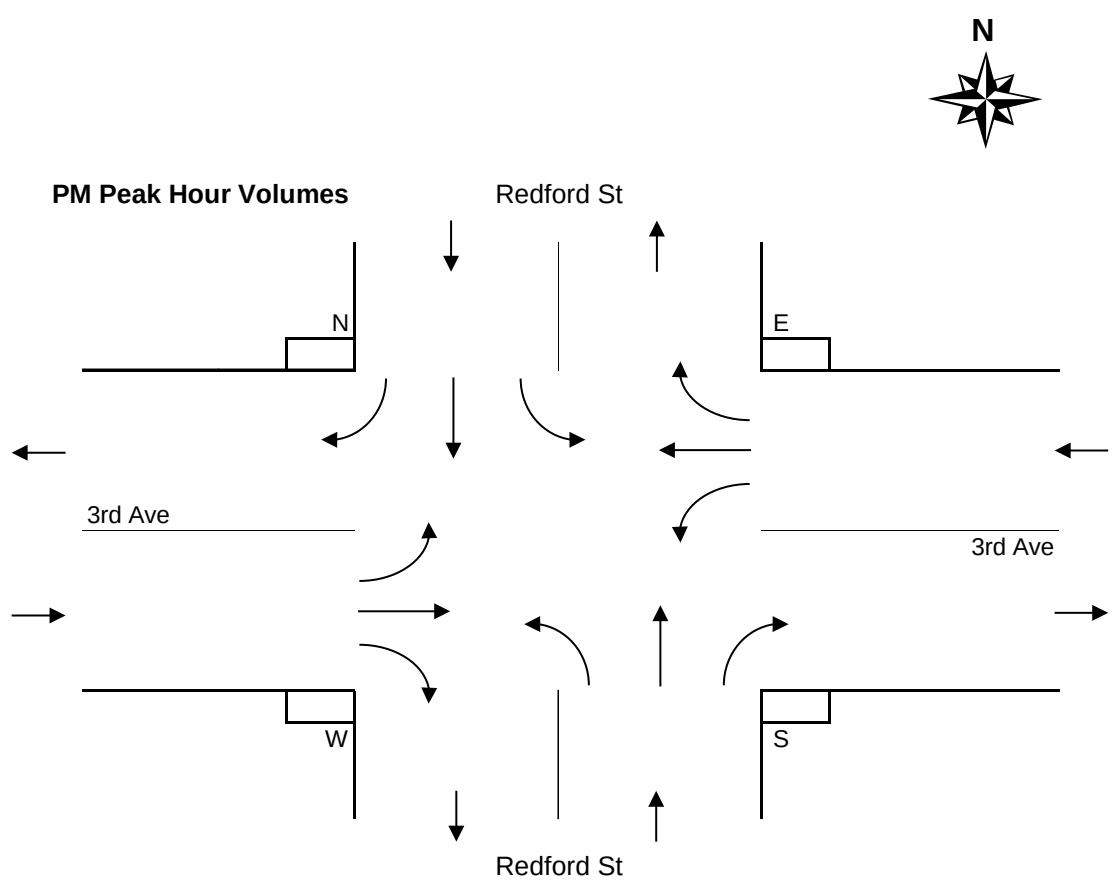

Period Hourly Averages
All Vehicles Combined

3rd Avenue @ Redford Street
Tuesday, September 26, 2017

Entire Survey Period
8 Hours

	Redford St				Redford St				3rd Ave				3rd Ave				Total	Crosswalks			
	NORTH Approach				SOUTH Approach				WEST Approach				EAST Approach				Volume				
	Left	Thru	Right	Total	Left	Thru	Right	Total	Left	Thru	Right	Total	Left	Thru	Right	Total		N	S	W	E
Total	698	3237	22	**3957**	14	2973	998	**3985**	14	41	23	**78**	952	42	1219	**2213**	10233	1	12	14	63
Avg Hr	87	405	3	**495**	2	372	125	**498**	2	5	3	**10**	119	5	152	**277**	1279	0	2	2	8

AM Peak Period
5 Hours

	Redford St				Redford St				3rd Ave				3rd Ave				Total	Crosswalks			
	NORTH Approach				SOUTH Approach				WEST Approach				EAST Approach				Volume				
Totals	Left	Thru	Right	Total	Left	Thru	Right	Total	Left	Thru	Right	Total	Left	Thru	Right	Total		N	S	W	E
Period	391	1882	13	**2286**	9	1626	525	**2160**	10	22	13	**45**	552	23	698	**1273**	5764	0	4	3	40
Avg Hr	78	376	3	**457**	2	325	105	**432**	2	4	3	**9**	110	5	140	**255**	1153	0	1	1	8

MD Peak Period
3 Hours

	Redford St				Redford St				3rd Ave				3rd Ave				Total	Crosswalks			
	NORTH Approach				SOUTH Approach				WEST Approach				EAST Approach				Volume				
Totals	Left	Thru	Right	Total	Left	Thru	Right	Total	Left	Thru	Right	Total	Left	Thru	Right	Total		N	S	W	E
Total	307	1355	9	**1671**	5	1347	473	**1825**	4	19	10	**33**	400	19	521	**940**	4469	1	8	11	23
Avg Hr	102	452	3	**557**	2	449	158	**608**	1	6	3	**11**	133	6	174	**313**	1490	0	3	4	8

PM Peak Period
Hours

	Redford St				Redford St				3rd Ave				3rd Ave				Total	Crosswalks			
	NORTH Approach				SOUTH Approach				WEST Approach				EAST Approach				Volume				
Totals	Left	Thru	Right	Total	Left	Thru	Right	Total	Left	Thru	Right	Total	Left	Thru	Right	Total		N	S	W	E
Total																					
Avg Hr																					

Average Hour Volumes

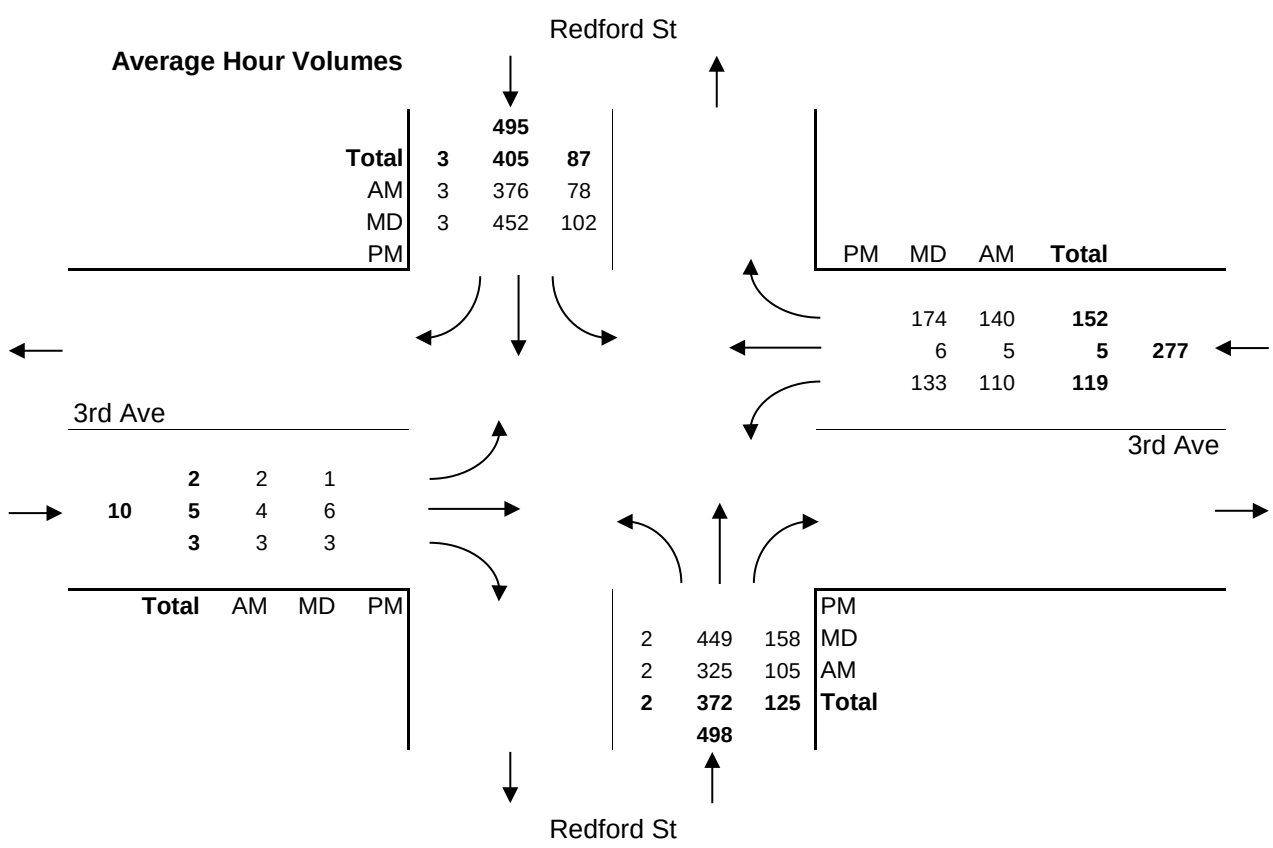

Data summarized for input into Synchro/HCS

All Vehicles Combined

AM

	EBL	EBT	EBR	WBL	WBT	WBR	NBL	NBT	NBR	SBL	SBT	SBR
Traffic Volume (vph)	4	10	2	136	8	154	3	436	150	83	447	2
Peak Hour Factor	0.50	0.63	0.50	0.77	0.67	0.90	0.25	0.89	0.85	0.90	0.94	0.25
Total Volume	10	22	13	552	23	698	9	1626	525	391	1882	13
% of Total Vehicles	100%	100%	100%	100%	100%	100%	100%	100%	100%	100%	100%	100%

MD

	EBL	EBT	EBR	WBL	WBT	WBR	NBL	NBT	NBR	SBL	SBT	SBR
Traffic Volume (vph)	2	7	3	127	5	195	2	497	169	108	423	3
Peak Hour Factor	0.50	0.58	0.75	0.88	0.42	0.87	0.50	0.90	0.88	0.84	0.85	0.38
Total Volume	4	19	10	400	19	521	5	1347	473	307	1355	9
% of Total Vehicles	100%	100%	100%	100%	100%	100%	100%	100%	100%	100%	100%	100%

PM

	EBL	EBT	EBR	WBL	WBT	WBR	NBL	NBT	NBR	SBL	SBT	SBR
Traffic Volume (vph)												
Peak Hour Factor												
Total Volume												
% of Total Vehicles	n/a	n/a	n/a	n/a	n/a	n/a	n/a	n/a	n/a	n/a	n/a	n/a

Regular Vehicles

AM

	EBL	EBT	EBR	WBL	WBT	WBR	NBL	NBT	NBR	SBL	SBT	SBR
Traffic Volume (vph)	3	5	0	123	3	147	1	411	135	78	417	2
Peak Hour Factor	0.75	0.42	n/a	0.79	0.38	0.88	0.25	0.88	0.84	0.89	0.95	0.25
Total Volume	8	8	8	495	11	671	6	1513	468	370	1768	13
% of Total Vehicles	80%	36%	62%	90%	48%	96%	67%	93%	89%	95%	94%	100%

MD

	EBL	EBT	EBR	WBL	WBT	WBR	NBL	NBT	NBR	SBL	SBT	SBR
Traffic Volume (vph)	2	4	3	116	1	191	1	478	160	105	403	3
Peak Hour Factor	0.50	0.50	0.75	0.88	0.25	0.87	0.25	0.90	0.89	0.82	0.87	0.38
Total Volume	4	5	10	364	3	509	4	1299	436	296	1306	9
% of Total Vehicles	100%	26%	100%	91%	16%	98%	80%	96%	92%	96%	96%	100%

PM

	EBL	EBT	EBR	WBL	WBT	WBR	NBL	NBT	NBR	SBL	SBT	SBR
Traffic Volume (vph)												
Peak Hour Factor												
Total Volume												
% of Total Vehicles	n/a	n/a	n/a	n/a	n/a	n/a	n/a	n/a	n/a	n/a	n/a	n/a

Buses

AM

	EBL	EBT	EBR	WBL	WBT	WBR	NBL	NBT	NBR	SBL	SBT	SBR
Traffic Volume (vph)	0	0	0	0	0	2	0	0	2	2	1	0
Peak Hour Factor	n/a	n/a	n/a	n/a	n/a	0.50	n/a	n/a	0.50	0.50	0.25	n/a
Total Volume	0	0	0	1	0	6	0	4	8	4	3	0
% of Total Vehicles	0%	0%	0%	0%	0%	1%	0%	0%	2%	1%	0%	0%

MD

	EBL	EBT	EBR	WBL	WBT	WBR	NBL	NBT	NBR	SBL	SBT	SBR
Traffic Volume (vph)	0	0	0	0	0	2	0	1	1	0	0	0
Peak Hour Factor	n/a	n/a	n/a	n/a	n/a	0.25	n/a	0.25	0.25	n/a	n/a	n/a
Total Volume	0	0	0	2	0	2	0	2	5	1	0	0
% of Total Vehicles	0%	0%	0%	1%	0%	0%	0%	0%	1%	0%	0%	0%

PM

	EBL	EBT	EBR	WBL	WBT	WBR	NBL	NBT	NBR	SBL	SBT	SBR
Traffic Volume (vph)												
Peak Hour Factor												
Total Volume												
% of Total Vehicles	n/a	n/a	n/a	n/a	n/a	n/a	n/a	n/a	n/a	n/a	n/a	n/a

Articulated Trucks

AM

	EBL	EBT	EBR	WBL	WBT	WBR	NBL	NBT	NBR	SBL	SBT	SBR
Traffic Volume (vph)	0	4	0	7	3	0	0	1	6	0	1	0
Peak Hour Factor	n/a	0.33	n/a	0.58	0.38	n/a	n/a	0.25	0.75	n/a	0.25	n/a
Total Volume	0	13	0	35	10	1	0	5	28	3	7	0
% of Total Vehicles	0%	59%	0%	6%	43%	0%	0%	0%	5%	1%	0%	0%

MD

	EBL	EBT	EBR	WBL	WBT	WBR	NBL	NBT	NBR	SBL	SBT	SBR
Traffic Volume (vph)	0	3	0	4	4	0	0	0	4	0	1	0
Peak Hour Factor	n/a	0.38	n/a	0.50	0.50	n/a	n/a	n/a	0.50	n/a	0.25	n/a
Total Volume	0	13	0	16	15	1	0	1	17	3	1	0
% of Total Vehicles	0%	68%	0%	4%	79%	0%	0%	0%	4%	1%	0%	0%

PM

	EBL	EBT	EBR	WBL	WBT	WBR	NBL	NBT	NBR	SBL	SBT	SBR
Traffic Volume (vph)												
Peak Hour Factor												
Total Volume												
% of Total Vehicles	n/a	n/a	n/a	n/a	n/a	n/a	n/a	n/a	n/a	n/a	n/a	n/a

Cube Trucks

AM

	EBL	EBT	EBR	WBL	WBT	WBR	NBL	NBT	NBR	SBL	SBT	SBR
Traffic Volume (vph)	0	0	0	2	0	0	0	6	0	1	7	0

Peak Hour Factor	n/a	n/a	n/a	0.50	n/a	n/a	n/a	0.50	n/a	0.25	0.58	n/a
Total Volume	0	0	0	7	0	2	0	21	5	4	20	0
% of Total Vehicles	0%	0%	0%	1%	0%	0%	0%	1%	1%	1%	1%	0%

MD

	EBL	EBT	EBR	WBL	WBT	WBR	NBL	NBT	NBR	SBL	SBT	SBR
Traffic Volume (vph)	0	0	0	2	0	2	0	3	1	2	2	0
Peak Hour Factor	n/a	n/a	n/a	0.50	n/a	0.50	n/a	0.38	0.25	0.25	0.50	n/a
Total Volume	0	0	0	4	0	4	0	11	4	3	6	0
% of Total Vehicles	0%	0%	0%	1%	0%	1%	0%	1%	1%	1%	0%	0%

PM

	EBL	EBT	EBR	WBL	WBT	WBR	NBL	NBT	NBR	SBL	SBT	SBR
Traffic Volume (vph)												
Peak Hour Factor												
Total Volume												
% of Total Vehicles	n/a	n/a	n/a	n/a	n/a	n/a	n/a	n/a	n/a	n/a	n/a	n/a

Dump Trucks

AM

	EBL	EBT	EBR	WBL	WBT	WBR	NBL	NBT	NBR	SBL	SBT	SBR
Traffic Volume (vph)	0	0	0	1	0	0	0	7	1	1	6	0
Peak Hour Factor	n/a	n/a	n/a	0.25	n/a	n/a	n/a	0.88	0.25	0.25	0.50	n/a
Total Volume	0	0	0	2	0	1	0	21	3	2	19	0
% of Total Vehicles	0%	0%	0%	0%	0%	0%	0%	1%	1%	1%	1%	0%

MD

	EBL	EBT	EBR	WBL	WBT	WBR	NBL	NBT	NBR	SBL	SBT	SBR
Traffic Volume (vph)	0	0	0	0	0	0	0	1	1	1	2	0
Peak Hour Factor	n/a	n/a	n/a	n/a	n/a	n/a	n/a	0.25	0.25	0.25	0.50	n/a
Total Volume	0	0	0	0	0	0	0	7	3	1	7	0
% of Total Vehicles	0%	0%	0%	0%	0%	0%	0%	1%	1%	0%	1%	0%

PM

	EBL	EBT	EBR	WBL	WBT	WBR	NBL	NBT	NBR	SBL	SBT	SBR
Traffic Volume (vph)												
Peak Hour Factor												
Total Volume												
% of Total Vehicles	n/a	n/a	n/a	n/a	n/a	n/a	n/a	n/a	n/a	n/a	n/a	n/a

Emergency Trucks

AM

	EBL	EBT	EBR	WBL	WBT	WBR	NBL	NBT	NBR	SBL	SBT	SBR
Traffic Volume (vph)	0	0	0	0	0	0	0	0	0	0	0	0
Peak Hour Factor	n/a	n/a	n/a	n/a	n/a	n/a	n/a	n/a	n/a	n/a	n/a	n/a
Total Volume	0	0	0	0	0	0	0	1	0	0	0	0
% of Total Vehicles	0%	0%	0%	0%	0%	0%	0%	0%	0%	0%	0%	0%

MD

	EBL	EBT	EBR	WBL	WBT	WBR	NBL	NBT	NBR	SBL	SBT	SBR
Traffic Volume (vph)	0	0	0	0	0	0	0	0	0	0	0	0
Peak Hour Factor	n/a	n/a	n/a	n/a	n/a	n/a	n/a	n/a	n/a	n/a	n/a	n/a
Total Volume	0	0	0	0	0	1	0	0	0	0	0	0
% of Total Vehicles	0%	0%	0%	0%	0%	0%	0%	0%	0%	0%	0%	0%

PM

	EBL	EBT	EBR	WBL	WBT	WBR	NBL	NBT	NBR	SBL	SBT	SBR
Traffic Volume (vph)												
Peak Hour Factor												
Total Volume												
% of Total Vehicles	n/a	n/a	n/a	n/a	n/a	n/a	n/a	n/a	n/a	n/a	n/a	n/a

Garbage Trucks

AM

	EBL	EBT	EBR	WBL	WBT	WBR	NBL	NBT	NBR	SBL	SBT	SBR
Traffic Volume (vph)	0	0	0	0	0	0	0	1	0	0	0	0
Peak Hour Factor	n/a	n/a	n/a	n/a	n/a	n/a	n/a	0.25	n/a	n/a	n/a	n/a
Total Volume	0	0	0	2	0	1	0	2	0	0	0	0
% of Total Vehicles	0%	0%	0%	0%	0%	0%	0%	0%	0%	0%	0%	0%

MD

	EBL	EBT	EBR	WBL	WBT	WBR	NBL	NBT	NBR	SBL	SBT	SBR
Traffic Volume (vph)	0	0	0	0	0	0	0	0	0	0	0	0
Peak Hour Factor	n/a	n/a	n/a	n/a	n/a	n/a	n/a	n/a	n/a	n/a	n/a	n/a
Total Volume	0	0	0	1	0	0	0	0	0	0	0	0
% of Total Vehicles	0%	0%	0%	0%	0%	0%	0%	0%	0%	0%	0%	0%

PM

	EBL	EBT	EBR	WBL	WBT	WBR	NBL	NBT	NBR	SBL	SBT	SBR
Traffic Volume (vph)												
Peak Hour Factor												
Total Volume												
% of Total Vehicles	n/a	n/a	n/a	n/a	n/a	n/a	n/a	n/a	n/a	n/a	n/a	n/a

Logging Trucks

AM

	EBL	EBT	EBR	WBL	WBT	WBR	NBL	NBT	NBR	SBL	SBT	SBR
Traffic Volume (vph)	0	0	0	0	0	0	0	4	1	0	4	0
Peak Hour Factor	n/a	n/a	n/a	n/a	n/a	n/a	n/a	0.33	0.25	n/a	0.33	n/a
Total Volume	0	0	0	0	0	0	0	20	1	0	22	0
% of Total Vehicles	0%	0%	0%	0%	0%	0%	0%	1%	0%	0%	1%	0%

MD

	EBL	EBT	EBR	WBL	WBT	WBR	NBL	NBT	NBR	SBL	SBT	SBR
Traffic Volume (vph)	0	0	0	0	0	0	0	2	1	0	4	0
Peak Hour Factor	n/a	n/a	n/a	n/a	n/a	n/a	n/a	0.50	0.25	n/a	0.25	n/a

Total Volume	0	0	0	0	0	0	0	6	2	0	11	0
% of Total Vehicles	0%	0%	0%	0%	0%	0%	0%	0%	0%	0%	1%	0%

PM

	EBL	EBT	EBR	WBL	WBT	WBR	NBL	NBT	NBR	SBL	SBT	SBR
Traffic Volume (vph)												
Peak Hour Factor												
Total Volume												
% of Total Vehicles	n/a	n/a	n/a	n/a	n/a	n/a	n/a	n/a	n/a	n/a	n/a	n/a

RVs

AM

	EBL	EBT	EBR	WBL	WBT	WBR	NBL	NBT	NBR	SBL	SBT	SBR
Traffic Volume (vph)	0	0	0	0	0	1	0	2	0	0	4	0
Peak Hour Factor	n/a	n/a	n/a	n/a	n/a	0.25	n/a	0.25	n/a	n/a	0.50	n/a
Total Volume	0	0	0	0	0	2	0	3	0	1	7	0
% of Total Vehicles	0%	0%	0%	0%	0%	0%	0%	0%	0%	0%	0%	0%

MD

	EBL	EBT	EBR	WBL	WBT	WBR	NBL	NBT	NBR	SBL	SBT	SBR
Traffic Volume (vph)	0	0	0	0	0	0	0	2	0	0	2	0
Peak Hour Factor	n/a	n/a	n/a	n/a	n/a	n/a	n/a	0.25	n/a	n/a	0.25	n/a
Total Volume	0	0	0	0	0	1	0	4	0	0	5	0
% of Total Vehicles	0%	0%	0%	0%	0%	0%	0%	0%	0%	0%	0%	0%

PM

	EBL	EBT	EBR	WBL	WBT	WBR	NBL	NBT	NBR	SBL	SBT	SBR
Traffic Volume (vph)												
Peak Hour Factor												
Total Volume												
% of Total Vehicles	n/a	n/a	n/a	n/a	n/a	n/a	n/a	n/a	n/a	n/a	n/a	n/a

Utility Trucks

AM

	EBL	EBT	EBR	WBL	WBT	WBR	NBL	NBT	NBR	SBL	SBT	SBR
Traffic Volume (vph)	1	1	2	3	2	4	2	4	5	1	7	0
Peak Hour Factor	0.25	0.25	0.50	0.75	0.50	0.50	0.25	0.50	0.63	0.25	0.35	n/a
Total Volume	2	1	5	10	2	14	3	36	12	7	36	0
% of Total Vehicles	20%	5%	38%	2%	9%	2%	33%	2%	2%	2%	2%	0%

MD

	EBL	EBT	EBR	WBL	WBT	WBR	NBL	NBT	NBR	SBL	SBT	SBR
Traffic Volume (vph)	0	0	0	5	0	0	1	10	1	0	9	0
Peak Hour Factor	n/a	n/a	n/a	0.63	n/a	n/a	0.25	0.63	0.25	n/a	0.75	n/a
Total Volume	0	1	0	13	1	3	1	17	6	3	19	0
% of Total Vehicles	0%	5%	0%	3%	5%	1%	20%	1%	1%	1%	1%	0%

PM

	EBL	EBT	EBR	WBL	WBT	WBR	NBL	NBT	NBR	SBL	SBT	SBR
Traffic Volume (vph)												
Peak Hour Factor												
Total Volume												
% of Total Vehicles	n/a	n/a	n/a	n/a	n/a	n/a	n/a	n/a	n/a	n/a	n/a	n/a